TOSHIBA
Carrier

E12-311-2

SMMS i
SUPER MODULAR MULTI SYSTEM

# Engineering Data Book

## 3 compressors & 3 inverters Super Modular Multi System i

Notice: Toshiba is committed to continuously improving its products to ensure the highest quality and reliability standard, and to meet local regulations and market requirements.
All features and specifications are subject to change without prior notice.

# Contents


1 Foreword ..... 1-1
2 System overview ..... 2-1
2-1. Introduction ..... 2-1
2-2. OUTLINE OF Toshiba Carrier SMMS-i (Super Modular Multi System-i) ..... 2-4
2-3. Summary of system equipments ..... 2-5
2-4. List of product and combined model name ..... 2-6
2-5. Indoor unit ..... 2-7
2-6. Remote control ..... 2-8
3 Basic system configuration ..... 3-1
3-1. Single system (example) ..... 3-1
3-2. Combined system (example) ..... 3-2
4 Controls ..... 4-1
4-1. Outline of application Control ..... 4-1
4-2. Applications for indoor remote control ..... 4-2
4-3. Application control for central remote control ..... 4-3
4-4. Application controls by optional P.C. board of outdoor unit ..... 4-5
4-5. Application control of optional devices connectable to indoor units ..... 4-13
4-6. Application control for network ..... 4-14
4-7. Dimensional drawing ..... 4-16
5 Equipment selection procedure ..... 5-1
5-1. Selection flow chart ..... 5-1
5-2. Operational temperature range ..... 5-2
5-3. Combination conditions for indoor unit and outdoor unit ..... 5-3
5-4. Cooling/heating capacity characteristics ..... 5-4
5-5. Example of equipment selection ..... 5-10
6 Technical Specifications ..... 6-1
6-1. Outdoor Unit ..... 6-1
6-1-1. Specifications ..... 6-1
6-1-1-1. 208/230V model ..... 6-1
6-1-1-2. 460V model ..... 6-5
6-1-2. Dimensional drawing ..... 6-9
6-1-3. Center of Gravity ..... 6-13
6-1-4. Sound pressure level data (NC Curve) ..... 6-14
6-2. Indoor Unit ..... 6-16
6-2-1. 4-Way Cassette type ..... 6-16
6-2-2. Compact 4-Way Cassette type ..... 6-29
6-2-3. Ceiling type ..... 6-39
6-2-4. High Wall type ..... 6-50
6-2-5. Medium Static Ducted type ..... 6-60
6-2-6. High Static Ducted type ..... 6-75
6-2-7. Slim Ducted type ..... 6-83

7 Refrigerant piping design ..... 7-1
7-1. Warnings on refrigerant leakage ..... 7-1
7-2. Free branching system ..... 7-2
7-3. Allowable length/height difference of refrigerant piping ..... 7-3
7-4. Selection of refrigerant piping ..... 7-4
7-5. Charging requirement with additional refrigerant ..... 7-5
7-6. Branch header / branch joint ..... 7-6
8 Wiring Design ..... 8-1
8-1. General ..... 8-1
8-2. Outdoor unit power supply ..... 8-1
8-3. Indoor unit power supply ..... 8-2
8-4. Design of control wiring ..... 8-3
8-5. Wiring diagram ..... 8-5
8-6. Connecting diagram ..... 8-9

# Foreword

The engineering data book details all relevant data, charts and drawings to enable you to get the best performance from the Toshiba Carrier Super Modular Multi System-i for the various applications.

The information is aimed to assist you by providing greater detail of the system and the wider applications that the system will cover.

# 2-1. Introduction

## The next-generation 'i-quality' trio

**Dedication to innovation and advanced intelligence fosters the imaginative creativity with which we deliver total value in air conditioning systems.**

***innovation, intelligence and imagination***

### Energy efficient

**Adopting highly efficient DC twin-rotary compressors and Advanced vector-controlled inverters realizes greater operating Performance under constant loads.**

*VRF system classification*

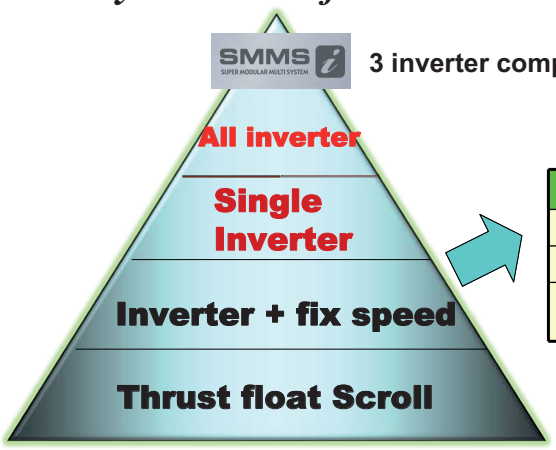


Type of the compressor

| | | |
|---|---|---|
| All inverter | INV COMP | INV COMP |
| Single Inverter | INV COMP | -- |
| Inverter + fix speed | INV COMP | FIX speed COMP |
| Thrust float Scroll | FIX speed<br>Thrust float Scroll COMP | FIX speed COMP |

**Toshiba Carrier has unique presence with INV + INV compressor in VRF air-conditioners.**

*Compressor comparison*

**Rotary compressor**

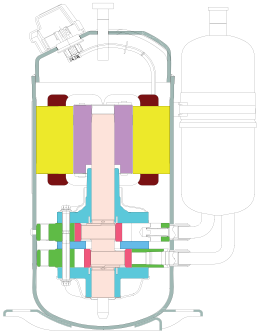

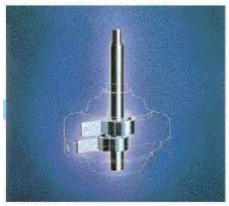

*DC Twin Rotary Compressor*
- *High Reliability*
- *High Efficiency*
- *Low Noise*

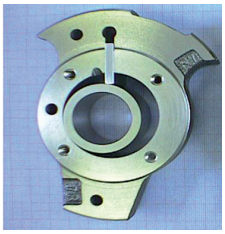

**Scroll compressor**

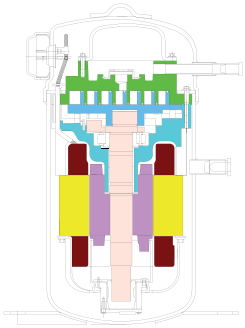

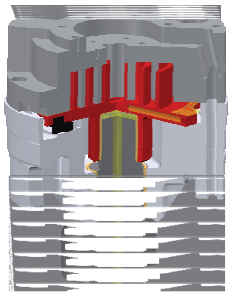

## Installation flexibility

**Layout flexibility with few design limitations**

System layouts can use a maximum equivalent distance of up to 720 ft. This makes it much easier to design for floors with many small rooms, or for tenants who often rearrange their floor layouts.

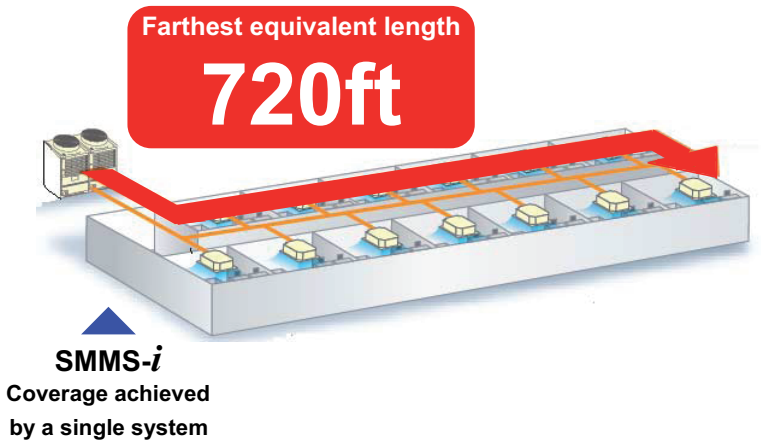


## Greater support for height differences between indoor units

Toshiba Carrier SMMS-i leads the industry with support for height differences of up to 130 ft between indoor units on a single system.
That is enough height to cover an 11-story building.

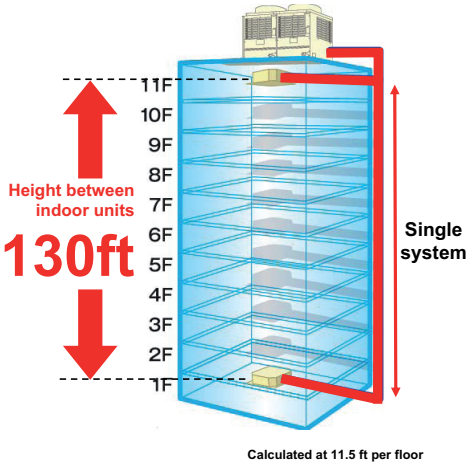


## Infinity variable control

**Ultra-precise 0.1 Hz control over compressor rotation speed**

Infinity variable control adjusts compressor rotation speed in near-seamless 0.1 Hz steps. Responding precisely to the capacity needs of the moment, this fine control minimizes energy loss when changing frequencies, and also creates a comfortable environment subject to minimal temperature variations.

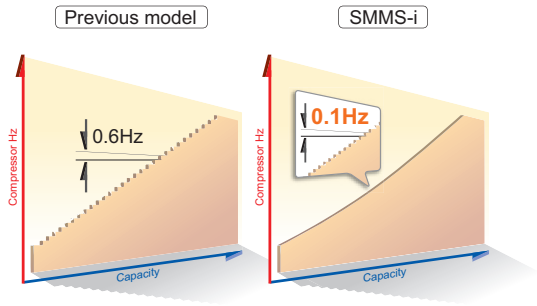

## New Intelligent VRF control

Toshiba Carrier's newly developed intelligent VRF control ensures that the right amount of refrigerant to satisfy the demands of each room, regardless of the type of indoor unit used and the length of the pipes.

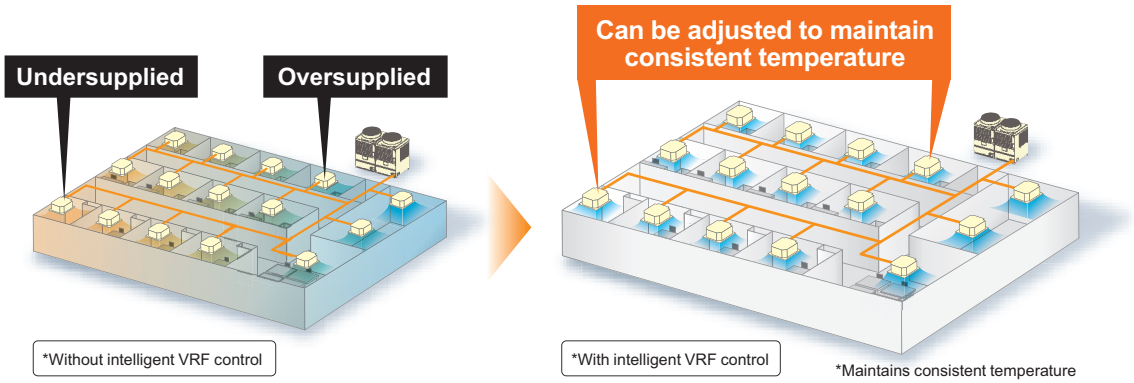


## Introducing high-performance outdoor units with 3 compressors and 3 inverters*1

### 1. New DC twin-rotary compressor

**Leading the world with Toshiba Carrier's own new DC twin-rotary compressor**

Three new DC twin-rotary compressors that feature outstanding capacity under partial load drive the 096 type and 114 type outdoor unit models, while two are used by the other outdoor unit model. These new compressors improve both energy efficiency and comfort levels.

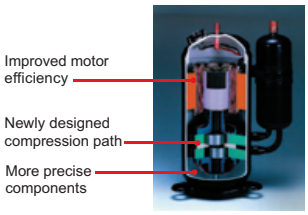


**New DC twin-rotary compressor**

Optimization of discharge port positioning and blade thickness reduces compression loss and friction resistance. Increasing the surface area of the rotor magnets and the addition of slits realize greater efficiency and reduced noise.

**Twin-rotary**

Each motor employs a compact and powerful magnetic rotor (rare earth magnet) and features reduced eddy-current loss.

(096 type, 114 type)

### 2. Fast-calculating vector-controlled inverter

**All-inverter control realizes finer control over operation to match the load on the system**

Toshiba Carrier SMMS-i leads the industry in controlling all 3 compressors with a dedicated inverter board that taps the compressor's full potential to provide smoother operation.

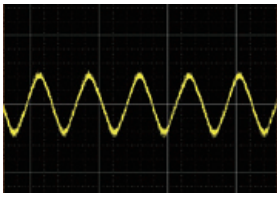

**Smooth sine curve**

The fast-calculating vector-controlled inverter produces a smooth sine curve that improves operating efficiency.

**Circuit board**

The vector-controlled inverter quickly converts current into a smooth sine curve to achieve smoother operation of the compressor's DC motor.

*1 096 type and 114 type

# 2-2. OUTLINE OF Toshiba Carrier SMMS-i (Super Modular Multi System-i)

## ◆ Shortest route design by free branching

**The Combination of line and header branching is highly flexible. Following the shortest design route possible, thereby saving on installation time and cost. Line/header branching after the header branching is only available with Toshiba Carrier SMMS-i.**

### Line branching

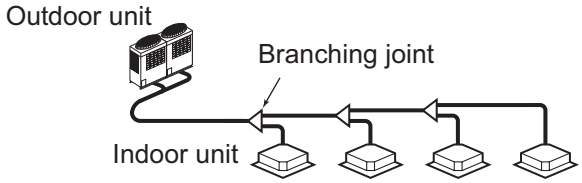


### Header branching

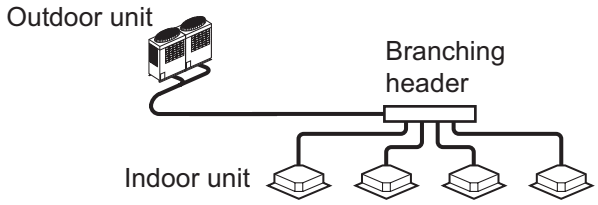


### Line + Header branching

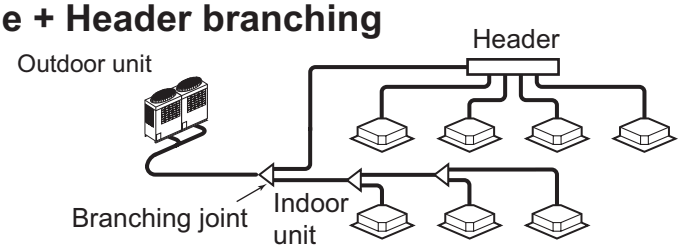


### Line branching after header branching

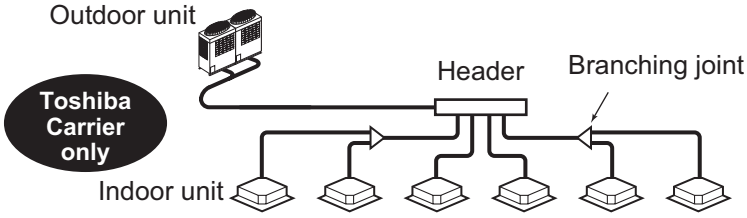


### Header branching after header branching

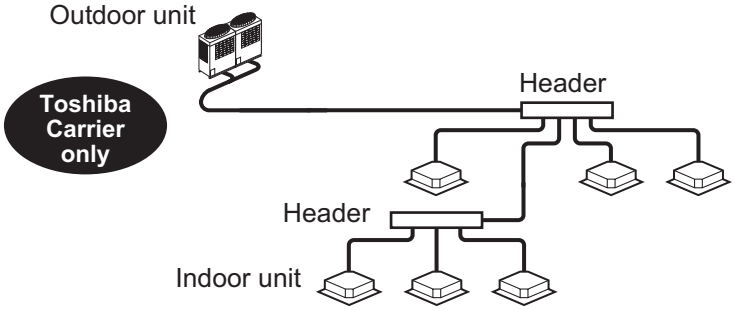


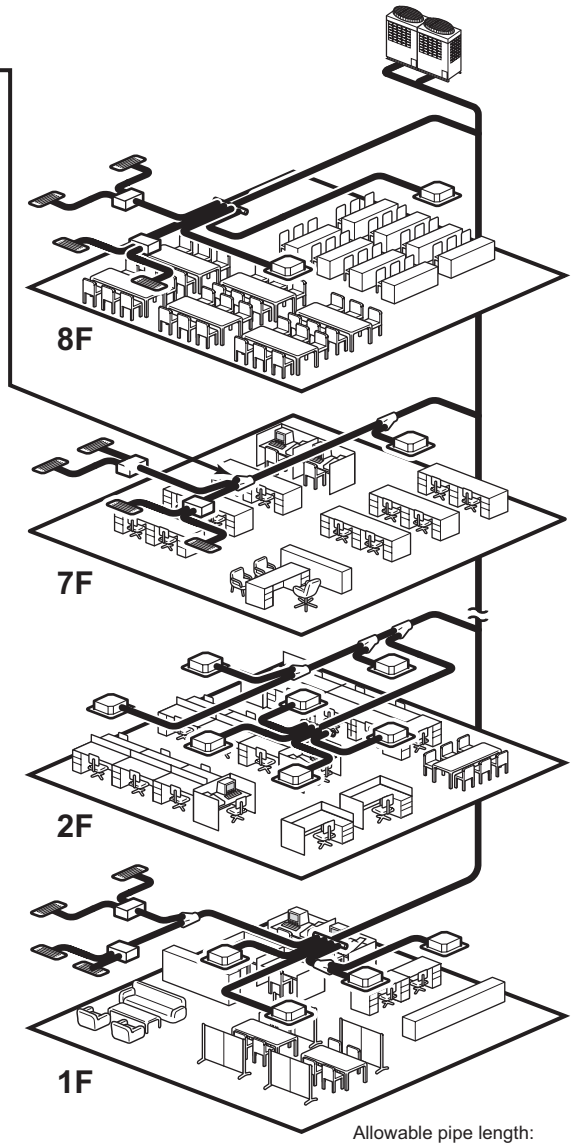


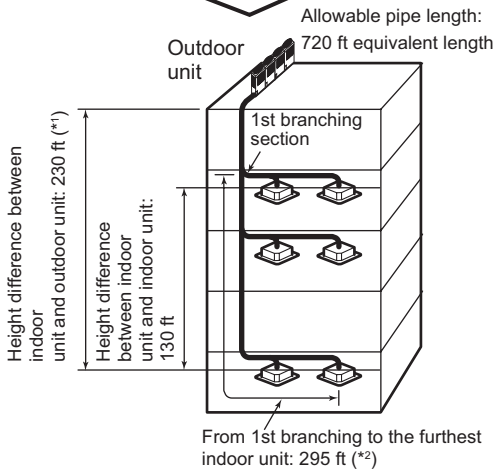


*1: If the height different between(H2) indoor units exceeds 10 ft, set below 165 ft.
*2 : If the height different between(H1) indoor and outdoor units exceeds 10 ft, set below 215 ft.

# 2-3. Summary of system equipments

## Equipment

### ■ Outdoor units

| Unit type | | | Inverter unit | | |
|---|---|---|---|---|---|
| Model name | 208/230V | MMY- | MAP0724HT9UL | MAP0964HT9UL | MAP1144HT9UL |
| | 460V | MMY- | MAP0724HT6UL | MAP0964HT6UL | MAP1144HT6UL |
| Capacity type | | | 072 type | 096 type | 096 type |
| Capacity code | | | 72 | 96 | 96 |

### ■ Combination of outdoor units

| Unit type | | | Inverter unit | | | |
|---|---|---|---|---|---|---|
| Model name | 208/230V | MMY- | AP1444HT9UL | AP1684HT9UL | AP1924HT9UL | AP2284HT9UL |
| | 460V | MMY- | AP1444HT6UL | AP1684HT6UL | AP1924HT6UL | AP2284HT6UL |
| Capacity type | | | 144 type | 168 type | 192 type | 228 type |
| Capacity code | | | 144 | 168 | 192 | 228 |

### ■ Branching joints and headers

| | Model name | Total capacity codes of indoor units (*1) | | Appearance |
|---|---|---|---|---|
| Y-shape branching joint (*3) | RBM-BY55UL | Below 61 | | |
| | RBM-BY105UL | 61 to below 136 (*2) | | |
| | RBM-BY205UL | 136 or more (*2) | | |
| 4-branching header (*4) | RBM-HY1043UL | Below 136 | Max. 4 branches | |
| | RBM-HY2043UL | 136 to below 241 | | |
| 8-branching header (*4) | RBM-HY1083UL | Below 136 | Max. 8 branches | |
| | RBM-HY2083UL | 136 to below 241 | | |
| Branching joint for connection of outdoor units(1set of 1 Y-shape joint pipe and 1 T-joint pipe as described right.) | RBM-BT14UL | Piping at gas side: ϕ1-1/4" → ϕ1-1/8", ϕ1-1/8" | Piping at liquid side: ϕ3/4", ϕ3/4", ϕ3/4" | |

*1 “Capacity code” is described on the page of “2-5 Indoor unit”.
*2 If total capacity code value of indoor units exceeds that of outdoor unit, apply capacity code of outdoor unit.
*3 When using Y-shape branching joint for 1st branching , select according to the capacity code of the outdoor unit.
*4 Max. capacity code of 54 in total can be connectable to one line after branching header.

# 2-4. List of product and combined model name

| Capacity type | Model name MMY- | No. of combined units | 072 type MMY- | Used Qty | 096 type MMY- | Used Qty | 114 type MMY- | Used Qty |
|---|---|---|---|---|---|---|---|---|
| 208/230V model | | | | | | | | |
| 072 | MAP0724HT9UL | 1 | MAP0724HT9UL | 1 | | | | |
| 096 | MAP0964HT9UL | 1 | | | MAP0964HT9UL | 1 | | |
| 114 | MAP1144HT9UL | 1 | | | | | MAP1144HT9UL | 1 |
| 144 | AP1444HT9UL | 2 | MAP0724HT9UL | 2 | | | | |
| 168 | AP1684HT9UL | 2 | MAP0724HT9UL | 1 | MAP0964HT9UL | 1 | | |
| 192 | AP1924HT9UL | 2 | | | MAP0964HT9UL | 2 | | |
| 228 | AP2284HT9UL | 2 | | | | | MAP1144HT9UL | 2 |
| 460V model | | | | | | | | |
| 072 | MAP0724HT6UL | 1 | MAP0724HT6UL | 1 | | | | |
| 096 | MAP0964HT6UL | 1 | | | MAP0964HT6UL | 1 | | |
| 114 | MAP1144HT6UL | 1 | | | | | MAP1144HT6UL | 1 |
| 144 | AP1444HT6UL | 2 | MAP0724HT6UL | 2 | | | | |
| 168 | AP1684HT6UL | 2 | MAP0724HT6UL | 1 | MAP0964HT6UL | 1 | | |
| 192 | AP1924HT6UL | 2 | | | MAP0964HT6UL | 2 | | |
| 228 | AP2284HT6UL | 2 | | | | | MAP1144HT6UL | 2 |

## 2-4-1. Allocation standard of model name

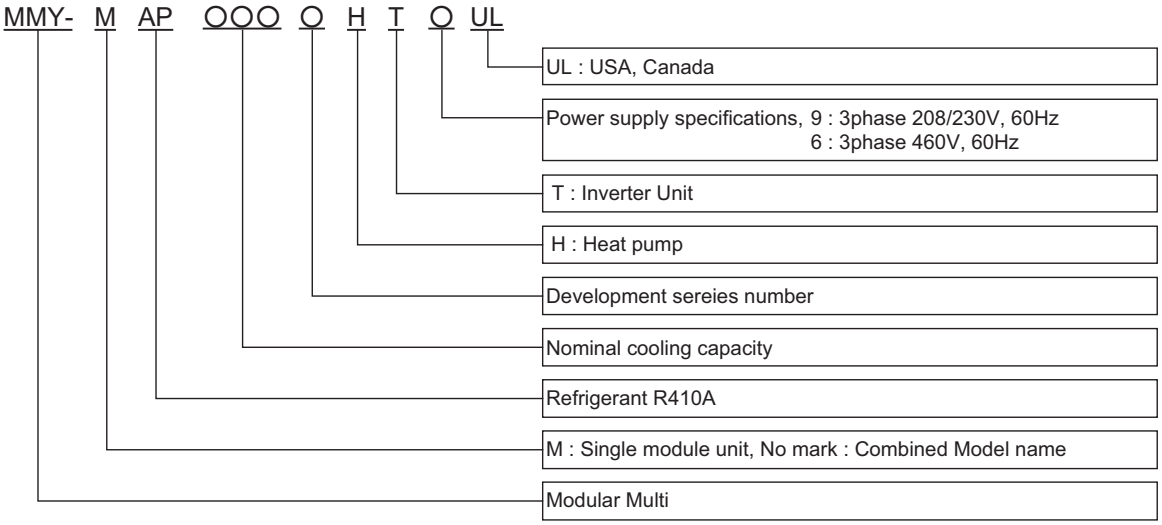


## 2-4-2. Rated condition air temperature

Cooling : Indoor air temperature 80 °F DryBulb/67 °F WetBulb, Outdoor air temperature 95 °F DryBulb
Heating : Indoor air temperature 70 °F DryBulb, Outdoor air temperature 47 °F DryBulb/43 °F WetBulb

# 2-5. Indoor unit

| Type | Appearance | Model name | Capacity type | Capacity code | Cooling capacity (kBtu/h) | Heating capacity (kBtu/h) |
|---|---|---|---|---|---|---|
| 4-Way Cassette type | 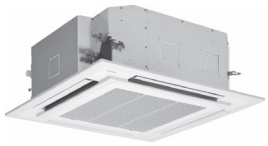 | **MMU-AP0182H2UL** | 018 type | 18 | 18 | 20 |
| | | **MMU-AP0212H2UL** | 021 type | 21 | 21 | 24 |
| | | **MMU-AP0242H2UL** | 024 type | 24 | 24 | 27 |
| | | **MMU-AP0302H2UL** | 030 type | 30 | 30 | 34 |
| | | **MMU-AP0362H2UL** | 036 type | 36 | 36 | 40 |
| | | **MMU-AP0422H2UL** | 042 type | 42 | 42 | 47.5 |
| Compact 4-Way Cassette type | | **MMU-AP0071MH2UL** | 007 type | 7.5 | 7.5 | 8.5 |
| | | **MMU-AP0091MH2UL** | 009 type | 9.5 | 9.5 | 10.5 |
| | | **MMU-AP0121MH2UL** | 012 type | 12 | 12 | 13.5 |
| | | **MMU-AP0151MH2UL** | 015 type | 15.4 | 15.4 | 17 |
| | | **MMU-AP0181MH2UL** | 018 type | 18 | 18 | 20 |
| Ceiling type | | **MMC-AP0181H2UL** | 018 type | 18 | 18 | 20 |
| | | **MMC-AP0241H2UL** | 024 type | 24 | 24 | 27 |
| | | **MMC-AP0361H2UL** | 036 type | 36 | 36 | 40 |
| | | **MMC-AP0421H2UL** | 042 type | 42 | 42 | 47.5 |
| High Wall type | | **MMK-AP0073H2UL** | 007 type | 7.5 | 7.5 | 8.5 |
| | | **MMK-AP0093H2UL** | 009 type | 9.5 | 9.5 | 10.5 |
| | | **MMK-AP0123H2UL** | 012 type | 12 | 12 | 13.5 |
| | | **MMK-AP0153H2UL** | 015 type | 15.4 | 15.4 | 17 |
| | | **MMK-AP0183H2UL** | 018 type | 18 | 18 | 20 |
| | | **MMK-AP0243H2UL** | 024 type | 24 | 24 | 27 |
| Medium Static Ducted type | | **MMD-AP0074BH2UL** | 007 type | 7.5 | 7.5 | 8.5 |
| | | **MMD-AP0094BH2UL** | 009 type | 9.5 | 9.5 | 10.5 |
| | | **MMD-AP0124BH2UL** | 012 type | 12 | 12 | 13.5 |
| | | **MMD-AP0154BH2UL** | 015 type | 15.4 | 15.4 | 17 |
| | | **MMD-AP0184BH2UL** | 018 type | 18 | 18 | 20 |
| | | **MMD-AP0214BH2UL** | 021 type | 21 | 21 | 24 |
| | | **MMD-AP0244BH2UL** | 024 type | 24 | 24 | 27 |
| | | **MMD-AP0304BH2UL** | 030 type | 30 | 30 | 34 |
| | | **MMD-AP0364BH2UL** | 036 type | 36 | 36 | 40 |
| | | **MMD-AP0424BH2UL** | 042 type | 42 | 42 | 47.5 |
| | | **MMD-AP0484BH2UL** | 048 type | 48 | 48 | 54 |
| High Static Ducted type | 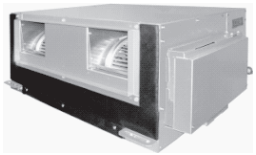 | **MMD-AP0304H2UL** | 030 type | 30 | 30 | 34 |
| | | **MMD-AP0364H2UL** | 036 type | 36 | 36 | 40 |
| | | **MMD-AP0484H2UL** | 048 type | 48 | 48 | 54 |
| Slim Ducted type | | **MMD-AP0074SPH2UL** | 007 type | 7.5 | 7.5 | 8.5 |
| | | **MMD-AP0094SPH2UL** | 009 type | 9.5 | 9.5 | 10.5 |
| | | **MMD-AP0124SPH2UL** | 012 type | 12 | 12 | 13.5 |
| | | **MMD-AP0154SPH2UL** | 015 type | 15.4 | 15.4 | 17 |
| | | **MMD-AP0184SPH2UL** | 018 type | 18 | 18 | 20 |

# 2-6. Remote control

| Name | Model name | Appearance | Application | Function |
|---|---|---|---|---|
| Wired remote control | RBC-AMT32UL | 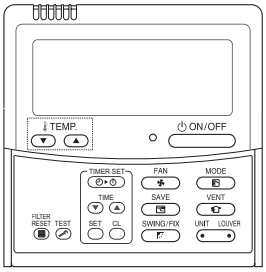 | **Connected to indoor unit**<br> 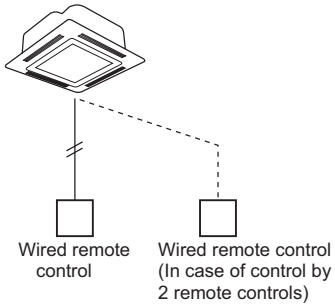 <br> | • Start/Stop<br>• Mode change<br>• Temperature setting<br>• Change of air flow<br>• Timer function<br>• Filter sign<br>• Self-diagnosis function<br>• Control by 2 remote controls is available. |
| Simple wired remote control | RBC-AS21UL | 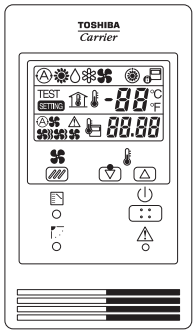 | **Connected to indoor unit**<br> 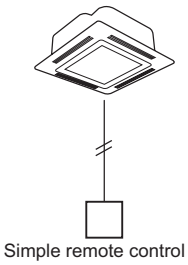 <br> | • Start/Stop<br>• Temperature setting<br>• Change of air flow<br>• Check code display |
| Wireless remote control kit | RBC-AX31U(W)-UL<br>RBC-AX22CUL<br>TCB-AX21UL | | **Connected to indoor unit**<br> 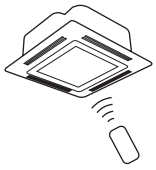 | • Start/Stop<br>• Mode change<br>• Temperature setting<br>• Change of air flow<br>• Timer function<br>• Control by 2 remote controls is available.<br>• Check code display<br><br>RBC-AX31U(W)-UL<br>(For 4-Way Cassette type)<br><br>RBC-AX22CUL<br>(For Ceiling type)<br><br>TCB-AX21UL<br>(For Compact 4-Way Cassette type, Medium Static Ducted type, Slim Ducted type) |

| Name | Model name | Appearance | Application | Function |
|---|---|---|---|---|
| Central remote control | BMS-CM1281TLUL | 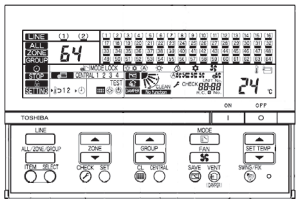 | **Connected to outdoor unit, indoor unit**<br> 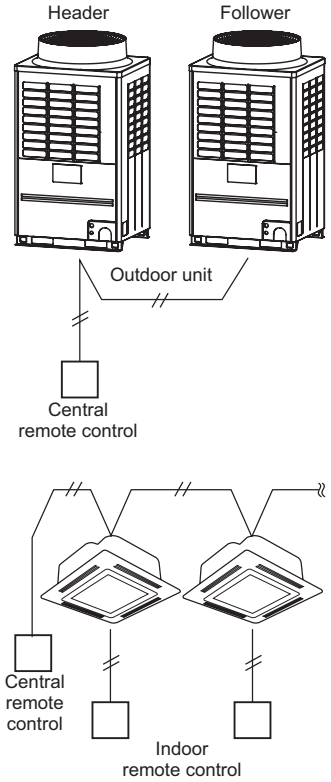 | • Individual control of up to (64 indoor units) x 2 TCC-LINK buses<br>• Individual control of up to (64 indoor units divided 1 to 64 zone) x 2 TCC-LINK buses (Up to 64 indoor units for each zone)<br>• Up to 16 outdoor header units are connectable per 1 TCC-LINK bus<br>• 4 types of central control settings of inhibit individual operation by remote control can be selected.<br>• Setting for (one of 1 to 64 zones) x 2ch is available.<br>• Setting for (one of 1 to 64 groups) x 2ch is available.<br>• Usable and BMS I/F other central control devices (Up to 10 central control devices in one TCC-LINK bus).<br>• Two control mode selectively (central control mode) (Remote control mode) by SW01 bit6.<br>• Return back setting |
| Wired remote control with weekly timer | RBC-AMS41UL | 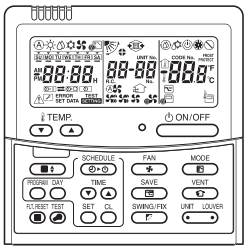 | **Connected to indoor unit**<br> 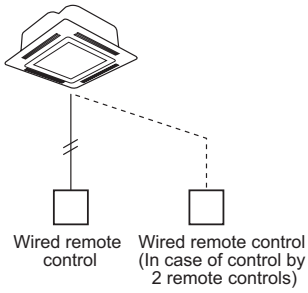 | • Start / Stop<br>• Mode change<br>• Temperature setting<br>• Change air flow<br>• Timer function<br>• Filter sign<br>• Self-diagnosis function<br>• Control by 2 remote controls is available.<br>• Schedule timer possible to program schedule timer (7 day timer) funtion possible to program 7 functions for each day of the week |

# 3-1. Single system (example)

## 072 type (MMY-MAP0724HT9UL, MAP0724HT6UL)

- Max. indoor unit : 12 units
- Capacity code of indoor unit : Min. : 57.6
  Max. : 90

| Capacity code |
|---|
| Total 85.5 |
| No. of total units |
| 9 |

In this case, the indoor units don't have Medium Static Duct Type and the height difference between indoor unts is less than 49.2 ft (15 m).

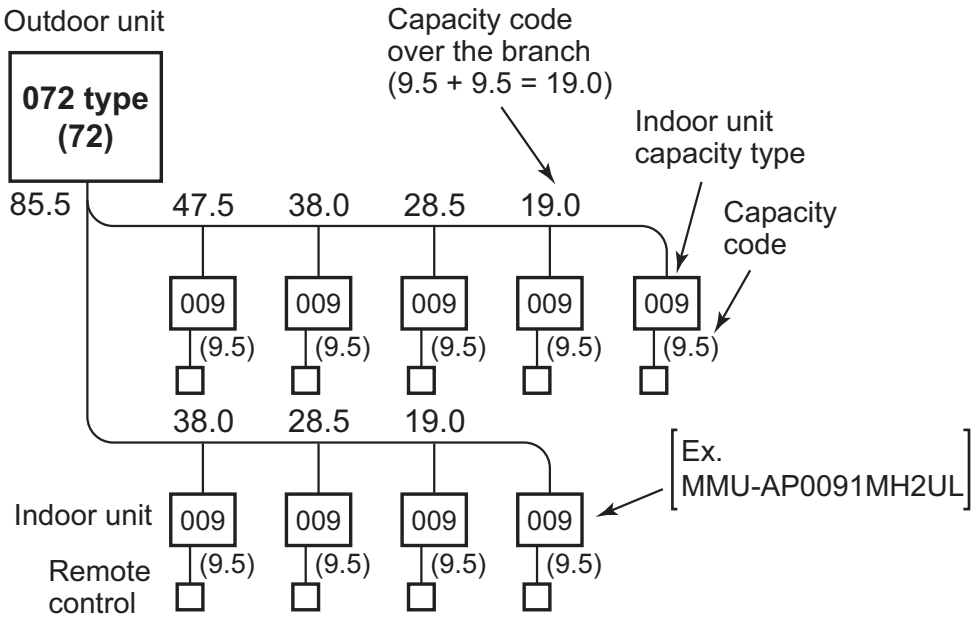

# 3-2. Combined system (example)

## 228 type (MMY-AP2284HT9UL, AP2284HT6UL)

- Max. indoor unit : 38 units
- Capacity code of indoor unit : Min. : 182.4
  Max. : 285

| Capacity code |
|---|
| Total 282.8 |
| No. of total units |
| 19 |

In this case, the indoor units don't have Medium Static Duct Type and the height difference between indoor unts is less than 49.2ft(15m).

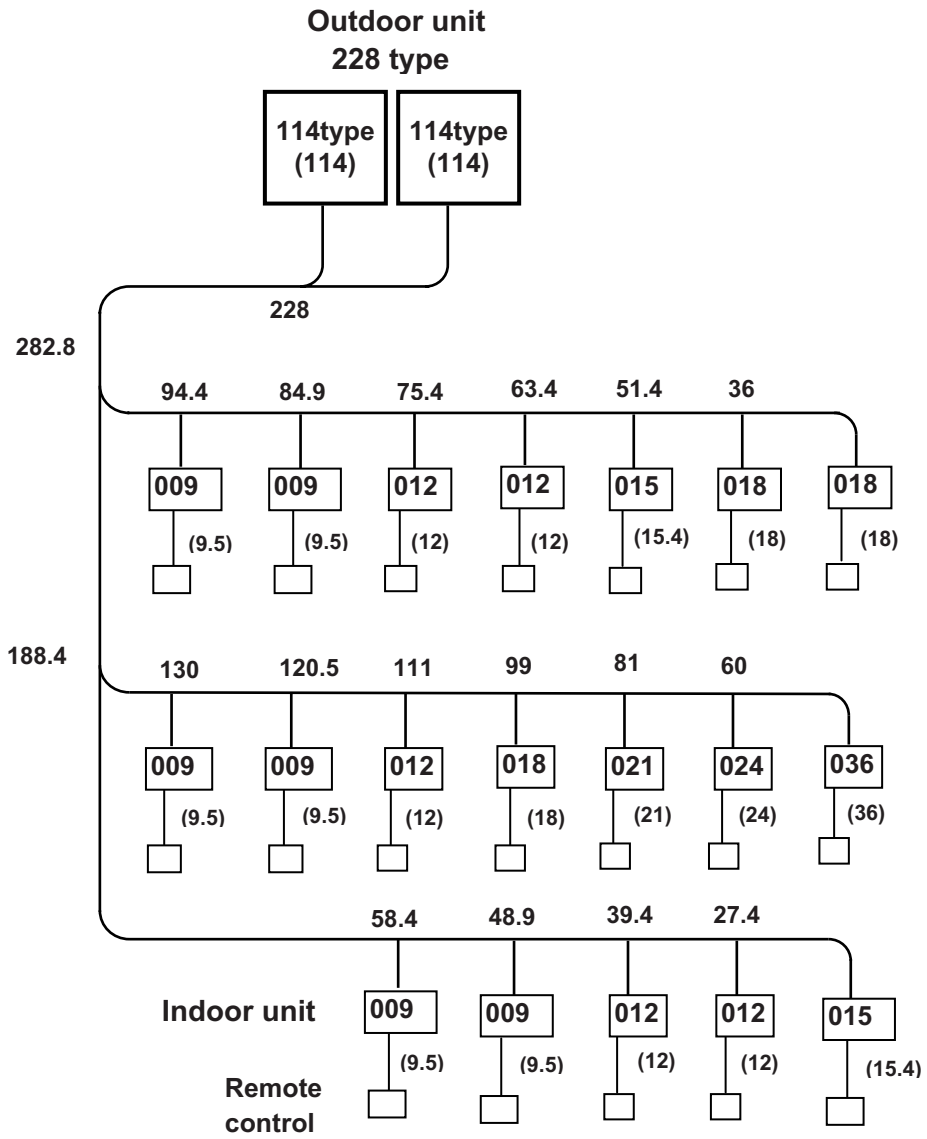

# 4-1. Outline of application Control

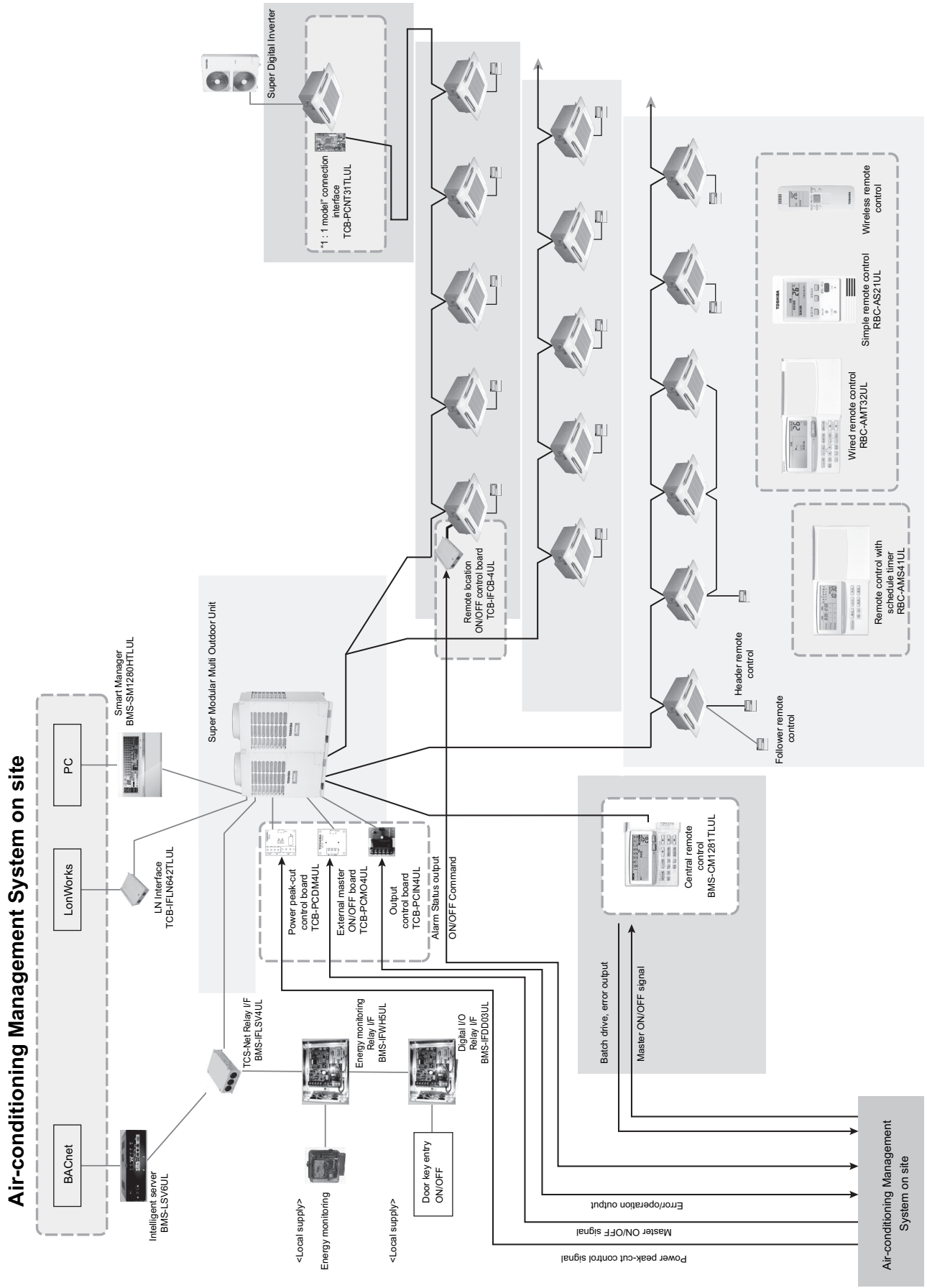


1 BACnet™: ANSI/ASHRAE135D1995, A Data CommuniCation Protocol for Bulding Automation and Control Networks.
2 LonWorks: Resisterd trademark of Echelon Corporation

# 4-2. Applications for indoor remote control

| | Basic function | System diagram | Model |
|---|---|---|---|
| 4-2-1. | **Individual control**<br>Air conditioner is individually operated at a distance. | 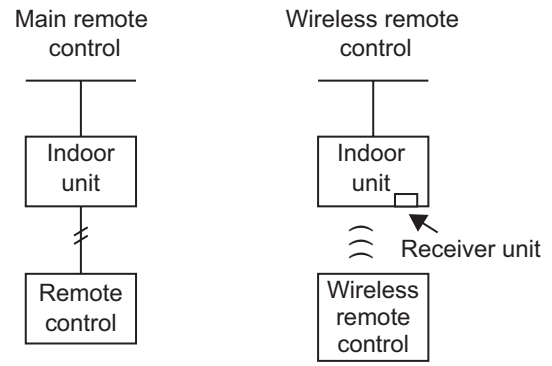 | • Wired remote control<br>**RBC-AMT32UL**<br>• Wired remote control with weekly timer<br>**RBC-AMS41UL**<br>• Simple wired remote control<br>**RBC-AS21UL**<br>• Wireless remote control kit<br>**RBC-AX31U(W)-UL**<br>**RBC-AX22CUL**<br>**TCB-AX21UL** |
| 4-2-2. | **GROUP control**<br>One remote control can control a group of up to a max. 8 indoor units. Operating on the same setting. | 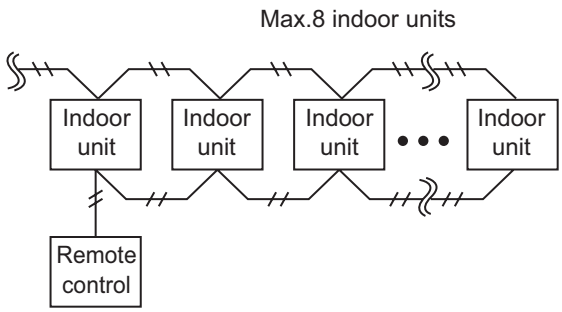 | • Wired remote control<br>**RBC-AMT32UL**<br>• Wired remote control with weekly timer<br>**RBC-AMS41UL**<br>• Simple wired remote control<br>**RBC-AS21UL**<br>• Wireless remote control kit<br>**RBC-AX31U(W)-UL**<br>**RBC-AX22CUL**<br>**TCB-AX21UL** |
| 4-2-3. | **Two remote control**<br>Air conditioner is controlled by two remote controls in two locations. | 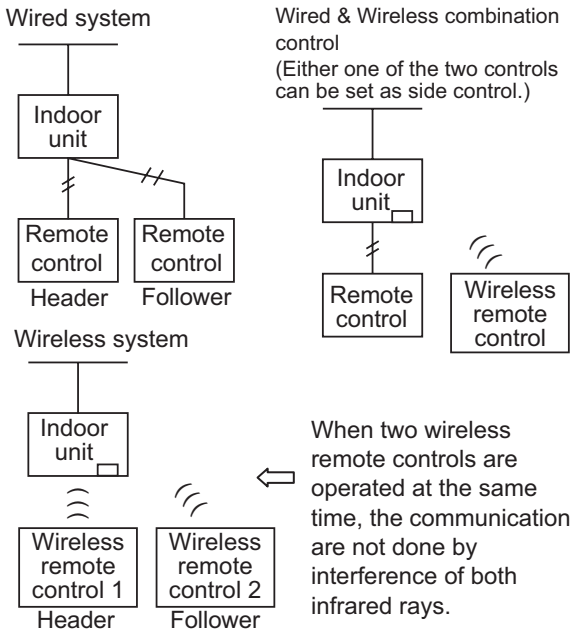 | • Wired remote control<br>**RBC-AMT32UL**<br>• Wired remote control with weekly timer<br>**RBC-AMS41UL**<br>• Simple wired remote control<br>**RBC-AS21UL**<br>• Wireless remote control kit<br>**RBC-AX31U(W)-UL**<br>**RBC-AX22CUL**<br>**TCB-AX21UL** |

# 4-3. Application control for central remote control

| | Basic function | System diagram | Model |
|---|---|---|---|
| **4-3-1.** | Central management controls for 128 units (64 units x 2) | 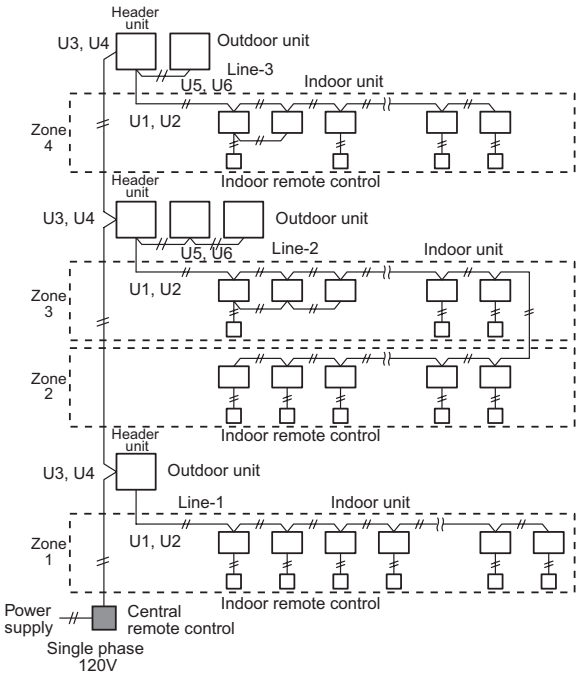 <br>**Function of central remote control**<br>• Individual control of up to (64 indoor units)*2 TCC-LINK buses<br>• Individual control of up to (64 indoor units divided 1 to 64 zone)*2 TCC-LINK buses (Up to 64 indoor units for each zone)<br>• Up to 16 outdoor header units are connectable per 1 TCC-LINK bus<br>• Setting for (one of 1 to 64 zones)*2ch is available.<br>• Setting for (one of 1 to 64 groups)*2ch is available.<br>• Return back setting<br>• Usable with other central control devices (Up to 10 central control devices in one control circuit)<br>• Central control 4 mode<br>4 selectable settings to restrict individual operation of remote control.<br>• Two selectable mode<br>Central control mode/Remote control mode<br>• Master/Sub setting possible | • Central remote control **BMS-CM1281TLUL**<br><br>**Indoor remote control**<br>• Wired remote control **RBC-AMT32UL**<br>• Wired remote control with weekly timer **RBC-AMS41UL**<br>• Simple wired remote control **RBC-AS21UL**<br>• Wireless remote control kit |

| | Basic function | System diagram | Model |
|---|---|---|---|
| **4-3-2.** | Either one of the two controls can be set as side control without indoor remote control.<br>[Please prepare a wired remote control for operation confirming of indoor unit in advance.] | 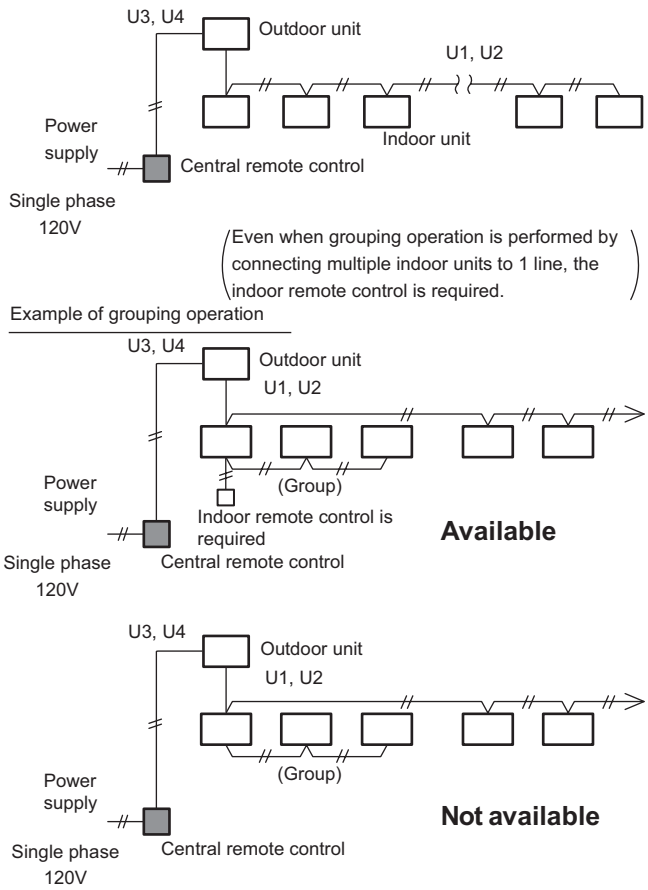 | • Central remote control **BMS-CM1281TLUL**<br><br>**Indoor remote control**<br>• Wired remote control **RBC-AMT32UL**<br>• Wired remote control with weekly timer **RBC-AMS41UL**<br>• Wireless remote control kit<br>• Simple wired remote control **RBC-AS21UL** |
| **4-3-3.** | Central management control with "1 : 1 model" | 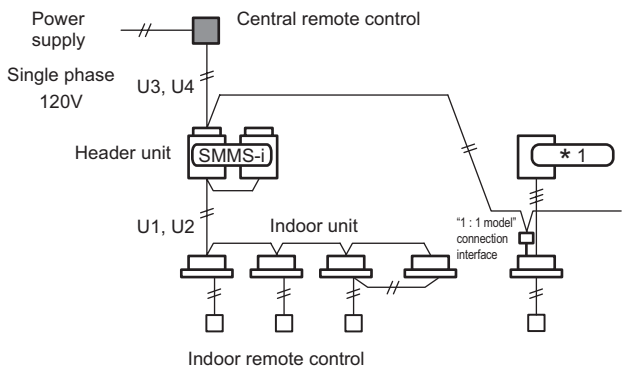 <br>* TOSHIBA Super Digital Inverter System (SDI) | • Central remote control **BMS-CM1281TLUL**<br>• "1 : 1 model" connection interface **TCB-PCNT31TLUL**<br>[High-wall type for SDI is not necessary this.]<br><br>**Indoor remote control**<br>• Wired remote control **RBC-AMT32UL**<br>• Wired remote control with weekly timer **RBC-AMS41UL**<br>• Simple wired remote control **RBC-AS21UL**<br>• Wireless remote control kit |

# 4-4. Application controls by optional P.C. board of outdoor unit

| Model name | Appearance | Function |
|---|---|---|
| TCB-PCDM4UL | <br>Size : 2.80 x 3.35 (in)<br>**Application**<br> <br>* Install the optional P.C. board in the inverter assembly of the outdoor header unit. | **Power peak-cut Control**<br><br>**Standard Specifications**<br>(Wiring example)<br> 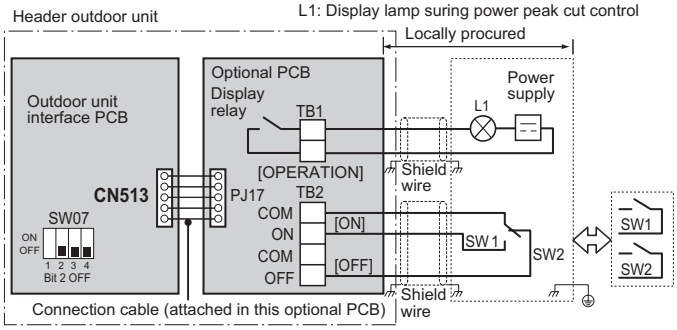 <br><br>For SW1 and SW2, be sure to provide no-voltage contacts for each terminal.<br>The input signals of SW1 and SW2 may be pulse input (100 msec or more) or continuous make.<br>Do not turn on [SW1] and [SW2] simultaneously.<br><br>**<SW07 (bit 2) OFF [2-stage switching]>**<br><br>Input: SW1, SW2; SW07 (bit 1): Bit 1 OFF, Bit 1 ON; Display relay (L1)<br>OFF, ON: 100% (normal operation) / 100% (normal operation): OFF<br>ON, OFF: 0% (forced stop) / Approx. 60% (upper limit regulated): ON<br><br>**For one input function**<br>Power peak-cut ON-OFF control is made possible on the SMMS-i on only the [ON] terminal input (SW1) by cutting the jumper lead (J16) of the center outdoor unit interface PCB.<br>(Wiring example)<br> 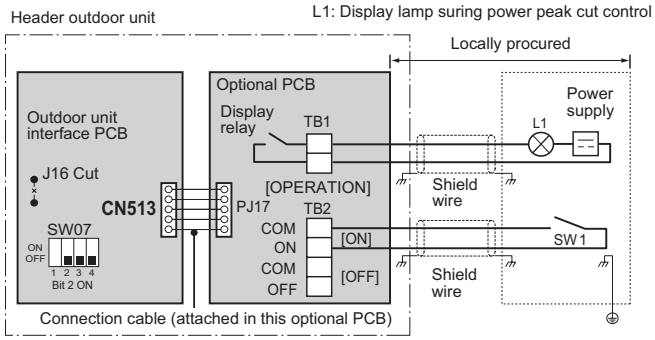 <br><br><br>**<SW07 (bit 2) OFF [2-stage switching]>**<br>Power peak-cut control turns ON when SW1 in the wiring example is ON (continuous make).<br><br>Jumper lead J16; Input SW1; SW07 (bit 1): Bit 1 OFF, Bit 1 ON; Display relay (L1)<br>Cut, OFF: 100% (normal operation) / 100% (normal operation): OFF<br>Cut, ON: 0% (forced stop) / Approx. 60% (upper limit regulated): ON |

| Model name | Appearance | Function |
|---|---|---|
| TCB-PCDM4UL | <br>Size : 2.80 x 3.35 (in)<br>**Application**<br> <br>* Install the optional P.C. board in the inverter assembly of the outdoor header unit. | **Enhanced Specifications**<br>(Wiring example)<br> 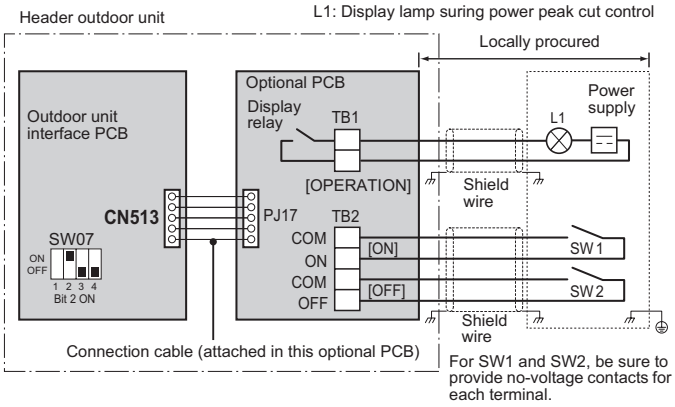 <br><br>**<SW07 (bit 2) ON [4-stage switching]>** |

| Input | | SW07 (bit 1) | | Display relay (L1) |
|---|---|---|---|---|
| SW1 | SW2 | Bit 1 OFF | Bit 1 ON | |
| OFF | OFF | 100% (normal operation) | 100% (normal operation) | OFF |
| ON | OFF | Approx. 80% (upper limit regulated) | Approx. 85% (upper limit regulated) | ON |
| OFF | ON | Approx. 60% (upper limit regulated) | Approx. 75% (upper limit regulated) | ON |
| ON | ON | 0% (forced stop) | Approx. 60% (upper limit regulated) | ON |

| Model name | Appearance | Function |
|---|---|---|
| TCB-PCMO4UL | <br>Size : 2.19 x 2.35 (in)<br>**Application**<br> <br>* Install the optional P.C. board in the inverter assembly of the outdoor header unit. | **[1] External master ON/OFF control**<br>**▼ Function**<br>By connecting the cable (attached in this optional PCB) to the interface PC board on an outdoor unit, all indoor units connected to the outdoor unit enable to operate simultaneously.<br>**▼ Operation**<br>The outdoor unit connection is for the header unit (U1).<br> 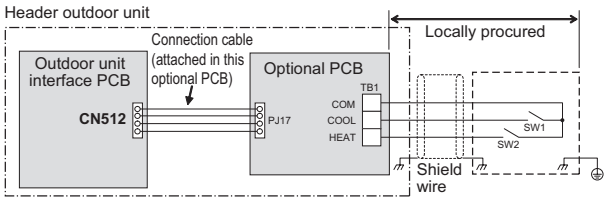 <br><br>SW1: Operation input switch<br>SW2: Stop input switch<br>Provide no-voltage pulse contacts for each terminal.<br>Hold the ON state for at least 100 msec.<br>Do not turn SW1 and SW2 ON simultaneously |

| Terminal | Input Signal | Operation |
|---|---|---|
| COOL (SW1) | ON<br>OFF | All indoor units operate together |
| HEAT (SW2) | ON<br>OFF | All indoor units stop together |

**[2] Night time operation (sound reduction) control**

**Model: SMMS-i**

**▼ Function**

As the cable (attached in this optional PCB) is connected to the “Interface PCB” on an outdoor unit, both compressor speed and fan speed are restricted while the signal of the night operation control is input. It makes the noise reduction during the night time operation.

**▼ Operation**

The outdoor unit connection is for the header unit (U1).

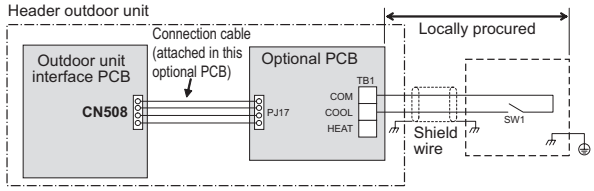


SW1: Night time signal switch

| Terminal | Input Signal | Operation |
|---|---|---|
| COOL (SW1) | ON<br>OFF | Night time operation control |
| | ON<br>OFF | Normal operation |

Each terminal should be connected to dry contact.

**▼ Sound reduction and approximation capacity (reference)**

| Outdoor unit (base unit) | During low-noise mode* dB(A) | Capacity | |
|---|---|---|---|
| | | Cooling | Heating |
| Model 072 type | 50 | approx. 85% | approx. 85% |
| Model 096 type | 53 | approx. 85% | approx. 85% |
| Model 114 type | 53 | approx. 80% | approx. 80% |

Relative to maximum capacity

* Position of noise measuring device :
3.3ft (1m) from the front face of the set and 4.9ft (1.5m) above ground (anechoic sound)

| Model name | Appearance | Function |
|---|---|---|
| TCB-PCMO4UL | <br>Size : 2.19 x 2.35 (in)<br>**Application**<br> <br>* Install the optional P.C. board in the inverter assembly of the outdoor header unit. | **[3] Operation mode selection control**<br><br>**▼ Function**<br>The heating/cooling mode of the system can be selected by connecting to the interface PCB of outdoor units.<br><br>**▼ Operation**<br>The outdoor unit connection is for the header unit (U1).<br> 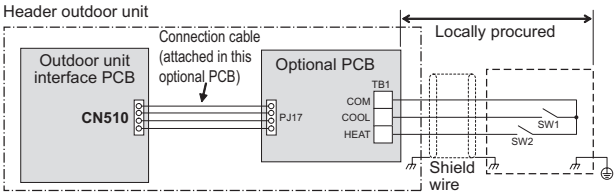 <br><br>SW1: Cooling mode specified input switch<br>SW2: Heating mode specified input switch<br><br>**Input Signal** / **Cooling (SW1)** / **Heating (SW2)** / **Operation: Selected operation mode**<br>ON / OFF / Cooling operation only<br>OFF / ON / Heating operation only<br>OFF / OFF / Normal operation<br><br>Each terminal should be connected to dry contact.<br><br>**The Switching of processing of Indoor Unit Operation State**<br>Processing of the operation state can be switched for indoor units in a mode other than the selected operation mode by setting the jumper lead (J01) of the header outdoor unit interface PCB.<br><br>**Jumper lead** / **Details of Processing**<br>J01 connected (factory default): Unallowed indoor units in a mode other than the selected operation mode are not treated as priority (thermo OFF state). (Unallowed indoor units)<br>Operation Mode / Operation State / Remote control<br>Cooling unit / Air blow operation at blow rate set on remote control / ⏻, ❁ indicator is displayed.<br>Heating unit / Air blow operation at super-slow blow rate<br>Air blow unit / Regular air blow operation at blow rate set on remote control<br>J01 cut: Indoor units in a mode other than the selected operation mode are forcibly switched to the selected operation mode.<br>PC board selection mode / Remote control operation/display<br>Normal / ❄, 💧, ☀, or 🌀 can be selected / When using the remote control, (mode select control) indicator is displayed.<br>Cool / Only ❄, 💧, or 🌀 can be selected<br>Heat / Only ☀ or 🌀 can be selected |

<table>
<tr><th>Model name</th><th>Appearance</th><th>Function</th></tr>
<tr><td rowspan="3">TCB-PCMO4UL</td><td>

Size : 2.19 x 2.35 (in)</td><td rowspan="3">[4] Snowfall fan control<br><br>▼ Function<br>The outdoor unit fan operates at snowfall by connecting to the outdoor unit interface PCB.<br><br>▼ Operation<br> 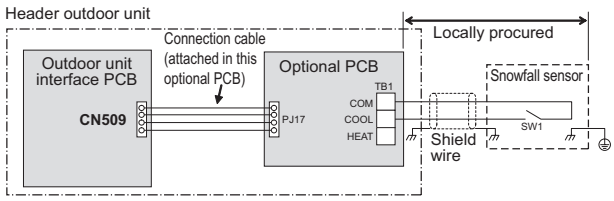

SW1: Snowfall detection switch (snowfall sensor)<br><br>
<table>
<tr><th>Terminal</th><th>Input Signal</th><th>Operation</th></tr>
<tr><td rowspan="2">Cooling (SW1)</td><td>ON<br>OFF</td><td>Snowfall fan control (Fan in outdoor unit operates.)</td></tr>
<tr><td>ON<br>OFF</td><td>Normal operation</td></tr>
</table>
Provide no-voltage continuous contacts for each terminal.</td></tr>
<tr><th>Application</th></tr>
<tr><td> 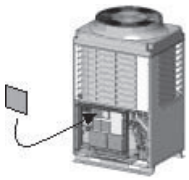
* Install the optional P.C. board in the inverter assembly of the outdoor header unit.</td></tr>
</table>

| Model name | Appearance | Function |
|---|---|---|
| TCB-PCIN4UL | 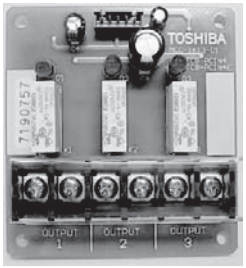 <br>Size : 2.87 x 3.11 (in)<br>**Application**<br> <br>* Install the optional P.C. board in the inverter assembly of the outdoor header unit. | **[1] Error / Operation Output**<br><br>**▼ Function**<br>The operation error output PCB can indicate operation and error states by connecting to the interface PCB of outdoor units.<br><br>**▼ Operation**<br>Operation output: The operation indicator is on while any indoor unit in the system is operating.<br>Error output: The error indicator is on when an error is occurred on even one of the indoor or outdoor units in the system.<br><br>Wiring example<br> 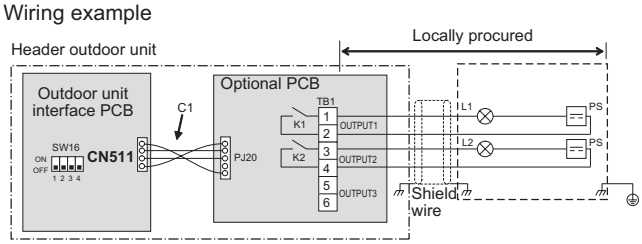 <br><br><br>C1 — Attached connection cable 1 (4wires)<br>CN511 — Connector on interface side (green)<br>K1, K2 — Relays<br>L1 — Error indication Lamp<br>L2 — Operation indication Lamp<br>OUTPUT1 — Error output<br>OUTPUT2 — Operation output<br>PJ20 — Connector on optional PCB side<br>PS — Power supply unit<br>TB1 — Terminal block<br><br>* [OUTPUT3] is displayed when power is turned on. |

| Model name | Appearance | Function |
|---|---|---|
| TCB-PCIN4UL | 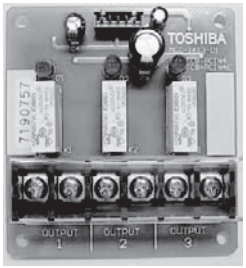 <br>Size : 2.87 x 3.11 (in)<br>**Application**<br> <br>* Install the optional P.C. board in the inverter assembly of individual outdoor unit. | **[2] Compressor Operation Output**<br><br>**▼ Function**<br>While each compressor in the outdoor unit is running, the compressor operation signal is displayed. This function can also be used to measure the elapsed time for the compressor operation.<br><br>**▼ Operation**<br>While a compressor is in operation, the relay of the output terminal corresponding to the compressor turns on (closed). When the operation of a compressor is off, the relay turns off (opened).<br>The output terminals are “OUTPUT1”, “OUTPUT2” and “OUTPUT3” from left to right of the compressors facing to the front of the outdoor unit.<br>Wiring example<br> 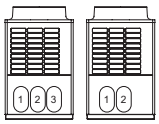 <br> 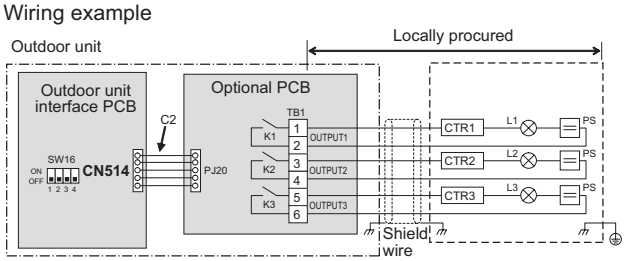 <br><br><br>C2 — Attached connection cable 2 (5wires)<br>CN514 — Connector on interface side (green)<br>CTR1 — Elapsed operation counter 1<br>CTR2 — Elapsed operation counter 2<br>CTR3 — Elapsed operation counter 3<br>K1, K2, K3 — Relays<br>L1, L2, L3 — Operation indication LEDs<br>OUTPUT1 — Compressor 1 operation output terminal<br>OUTPUT2 — Compressor 2 operation output terminal<br>OUTPUT3 — Compressor 3 operation output terminal<br>PJ20 — Connector on optional PCB side<br>PS — Power supply unit<br>TB1 — Terminal block |

| Model name | Appearance | Function |
|---|---|---|
| TCB-PCIN4UL | 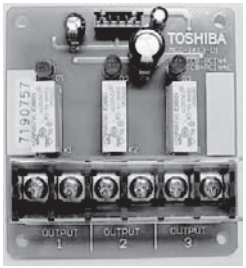 <br>Size : 2.87 x 3.11 (in)<br>**Application**<br> <br>* Install the optional P.C. board in the inverter assembly of the outdoor header unit. | **[3] Operating Rate Output**<br><br>**▼ Function**<br>The state of operation is available to check remotely as the signal of system operation rate enable to output.<br><br>**▼ Operation**<br>As shown in the table, each of the output terminals turns ON (relay closes) and OFF (relay opens) depending on the system operating rate. |

| Functions | SW16 | OUTPUT1 | OUTPUT2 | OUTPUT3 | Operating rate FA |
|---|---|---|---|---|---|
| System operating rate output | ON / OFF 1 2 3 4<br>bit 1 : ON<br>bit 2 : OFF | OFF | OFF | OFF | FA=0% |
| | | ON | OFF | OFF | 0%<FA<20% |
| | | OFF | ON | OFF | 20%≤FA<35% |
| | | ON | ON | OFF | 35%≤FA<50% |
| | | OFF | OFF | ON | 50%≤FA<65% |
| | | ON | OFF | ON | 65%≤FA<80% |
| | | OFF | ON | ON | 80%≤FA<95% |
| | | ON | ON | ON | 95%≤FA |

OFF=relay open ON=relay closed

Wiring example

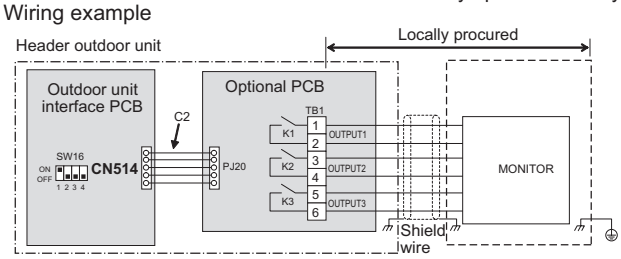


| | |
|---|---|
| C2 | Attached connection cable 2 (5wires) |
| CN514 | Connector on interface side (green) |
| K1, K2, K3 | Relays |
| MONITOR | Monitoring device |
| OUTPUT1 | Output terminal for each function |
| OUTPUT2 | Output terminal for each function |
| OUTPUT3 | Output terminal for each function |
| PJ20 | Connector on optional PCB side |
| TB1 | Terminal block |

# 4-5. Application control of optional devices connectable to indoor units

## 4-5-1. Remote location ON/OFF control box

| Model name | Appearance | Function |
|---|---|---|
| TCB-IFCB-4UL | 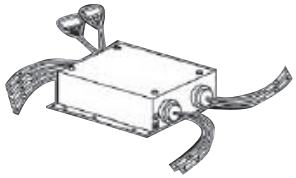 | • Start and stop of the air conditioner is possible by a external signal and indication of operation/ alarm externally. |
| | **Appearance** | **Function** |
| | 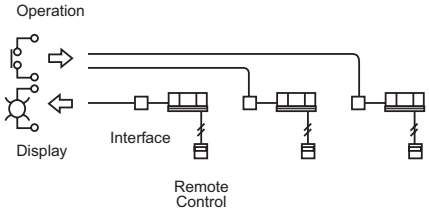 | • Monitoring<br>ON/OFF status (for indoor unit)<br>Alarm status (system & indoor unit stop)<br>• ON/OFF command<br>Air conditioner can be turned ON/OFF by the external signals. The external ON/OFF signals will initiate the signals shown below.<br> |

## 4-5-2. “1:1 model” connection interface

| Model name | Appearance | Function |
|---|---|---|
| TCB-PCNT31TLUL | 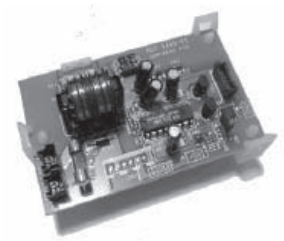 <br>Install optional P.C. board in E-parts of the indoor unit. | • Link adapter for “1:1 model” to enable connection to VRF system network<br><br>1:1 model: Super digital inverter<br><br>• High-wall type does not need this interface. |
| | | **Connection of cables** |
| | **Appearance** | 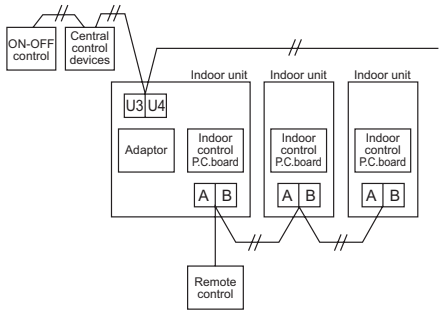 |
| | 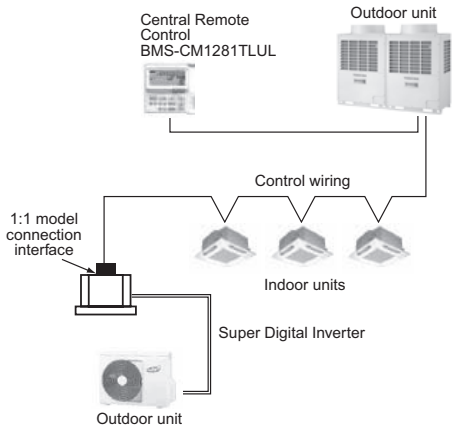 | **Wiring diagram of indoor P.C. board** |
| | | 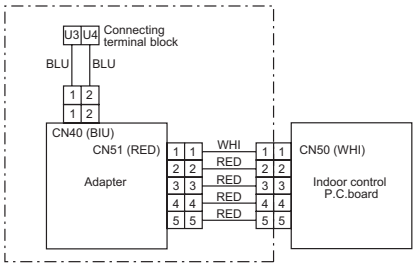 |

# 4-6. Application control for network

## 4-6-1. LONWORKS

| System diagram | Model |
|---|---|
| 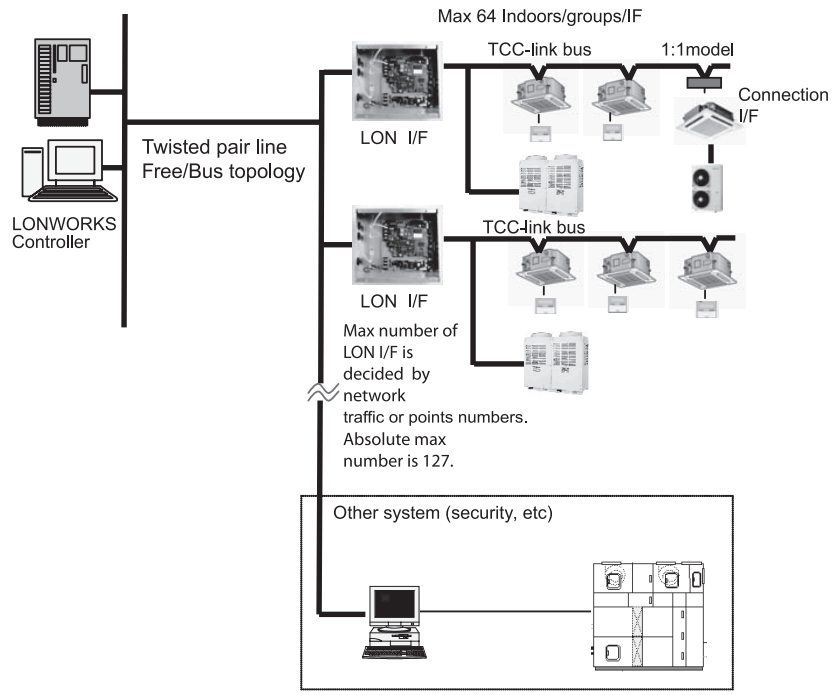 | • LN Interface<br>**TCB-IFLN642TLUL**<br>• "1:1model" connection TCC-Link Interface<br>**TCB-PCNT31TLUL**<br>• Wired Remote control<br>**RBC-AMT32UL**<br>• Wireless Remote control<br>**RBC-AX31U(W)-UL**<br>**RBC-AX22CUL**<br>**TCB-AX21UL**<br>• Wired Remote control with weekly timer<br>**RBC-AMS41UL**<br><br>**[Note] Xif file:**<br>• Controller commissioning without LN Interface |

## 4-6-2. BACnet

| System diagram | Model |
|---|---|
| 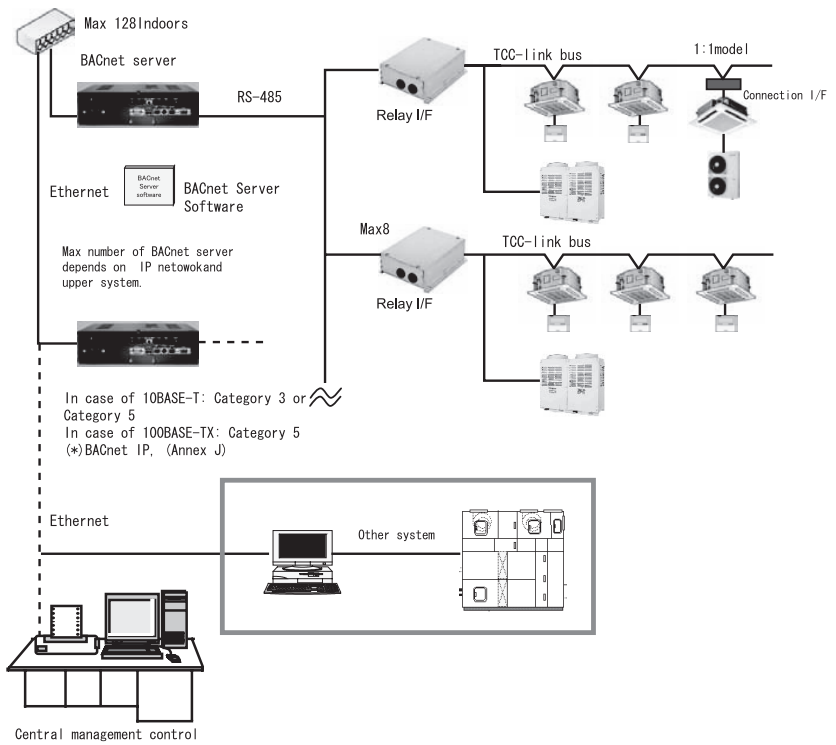 | • BACnet server<br>**BMS-LSV6UL**<br>• BACnet software<br>**BMS-STBN09UL**<br>• Setting file creation software<br>• "1:1model" connection TCC-Link Interface<br>**TCB-PCNT31TLUL**<br>• TCS-net Relay Interface<br>**BMS-IFLSV4UL**<br>• Wired Remote control<br>**RBC-AMT32UL**<br>• Wireless Remote control<br>**RBC-AX31U(W)-UL**<br>**RBC-AX22CUL**<br>**TCB-AX21UL**<br>• Wired Remote control with weekly timer<br>**RBC-AMS41UL**<br><br>**[Note] Pc BACnet explorer:**<br>• Commissioning for BACnet server (lacal supply) |

## 4-6-3. Smart Manager

| System diagram | Model |
|---|---|
| 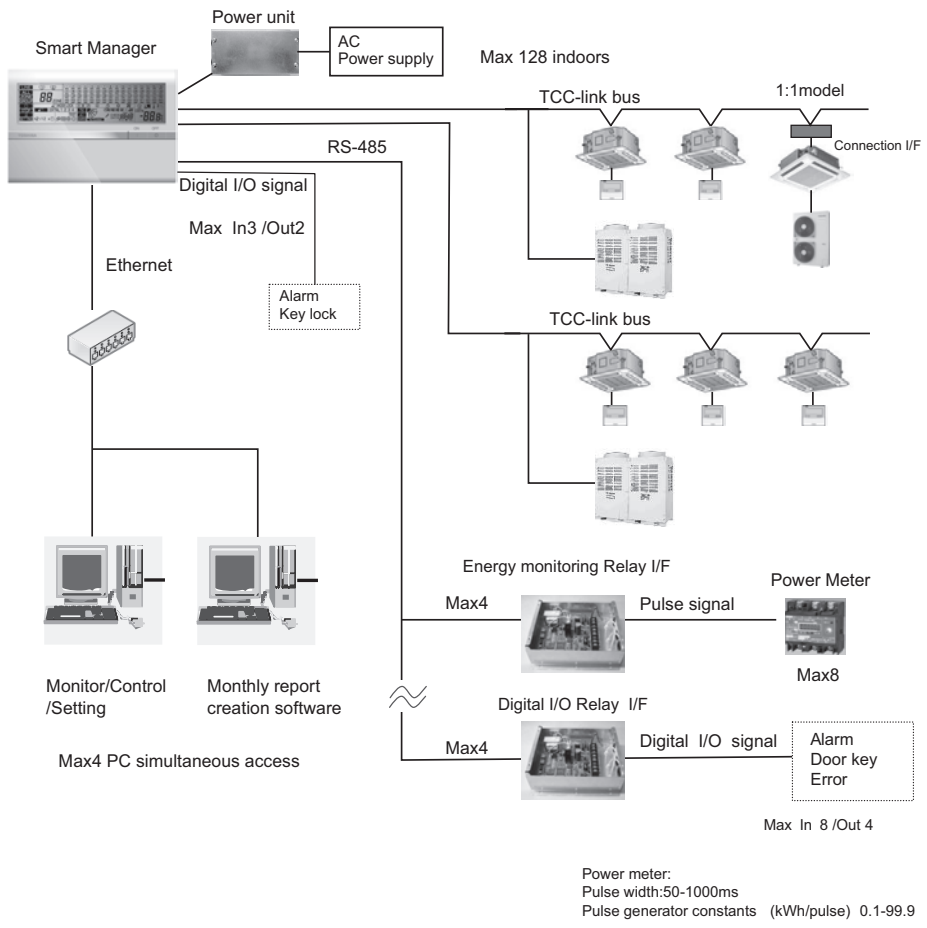 | • Smart Manager<br>**BMS-SM1280HTLUL**<br>• Setting file creation software<br>• Monthly report creation software<br>• “1:1model” connection TCC-Link Interface<br>**TCB-PCNT31TLUL**<br>• Energy monitoring Relay I/F<br>**BMS-IFWH5UL**<br>• Digital I/O Relay I/F<br>**BMS-IFDD03UL**<br>• Wired Remote control<br>**RBC-AMT32UL**<br>• Wireless Remote control<br>**RBC-AX31U(W)-UL**<br>**RBC-AX22CUL**<br>**TCB-AX21UL**<br>• Wired Remote control with schedule timer<br>**RBC-AMS41UL** |

# 4-7. Dimensional drawing

## Wired remote control

Unit: in (mm)

**RBC-AMT32UL**

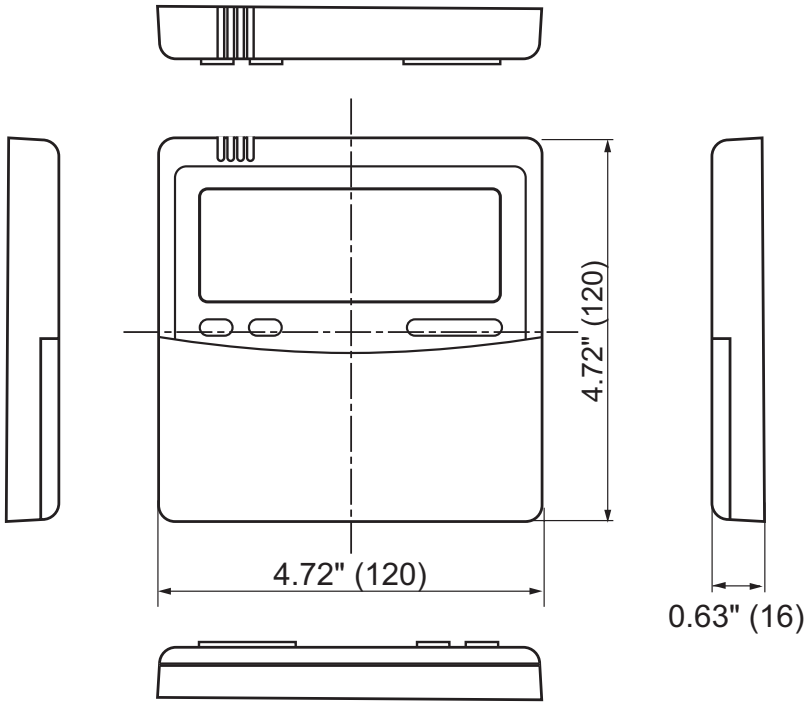


## Simple wired remote control

**RBC-AS21UL**

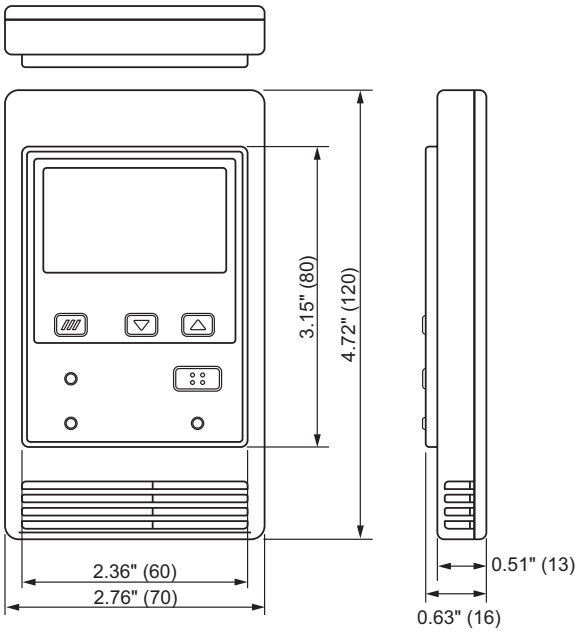

## Wireless remote control kit

### RBC-AX31U(W)-UL

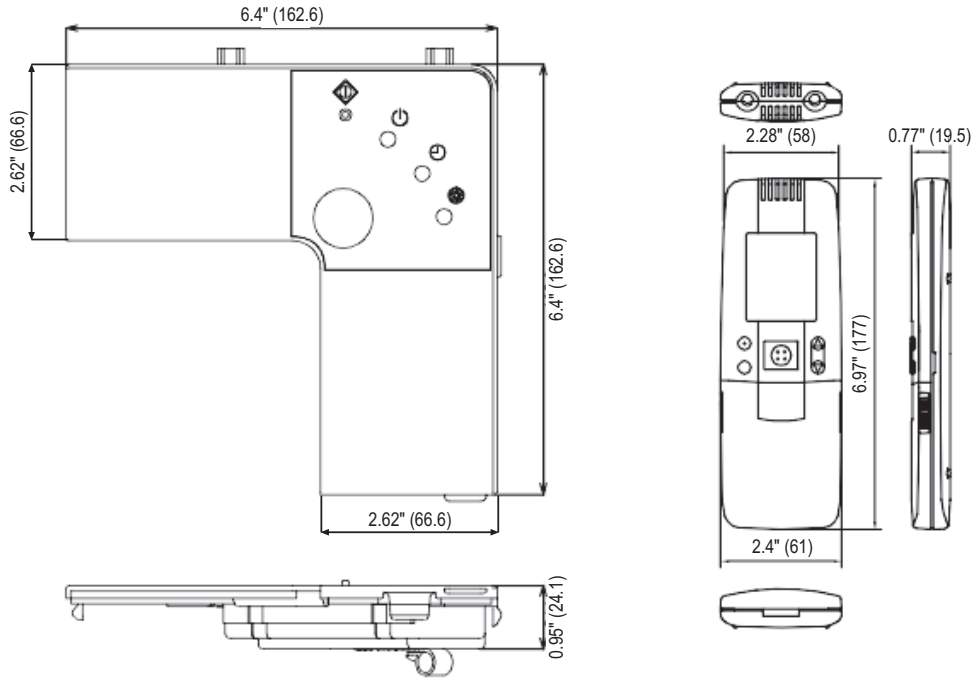


## Wireless remote control kit

### RBC-AX22CUL

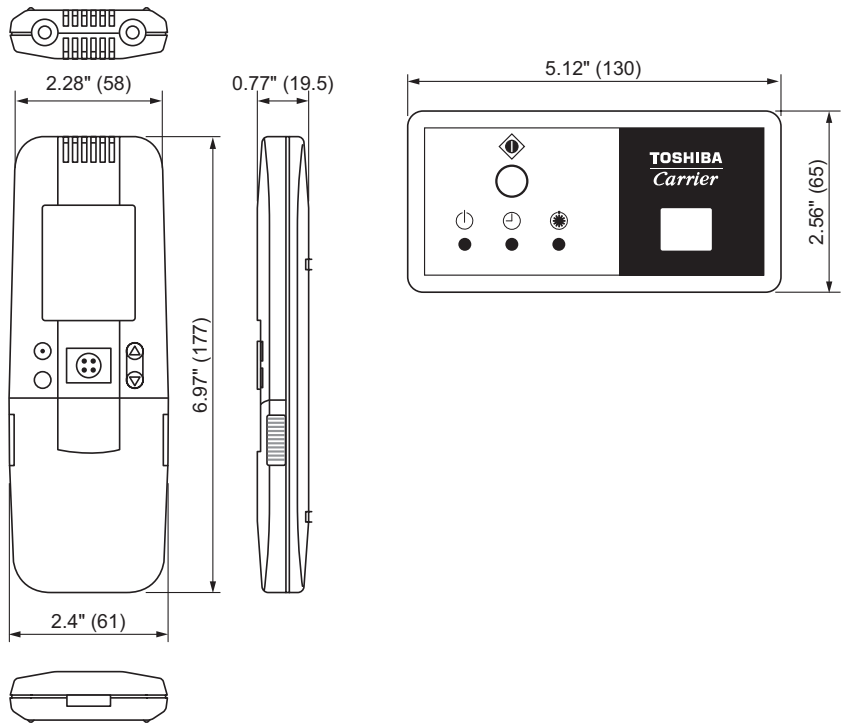

## Wireless remote control kit

**TCB-AX21UL**

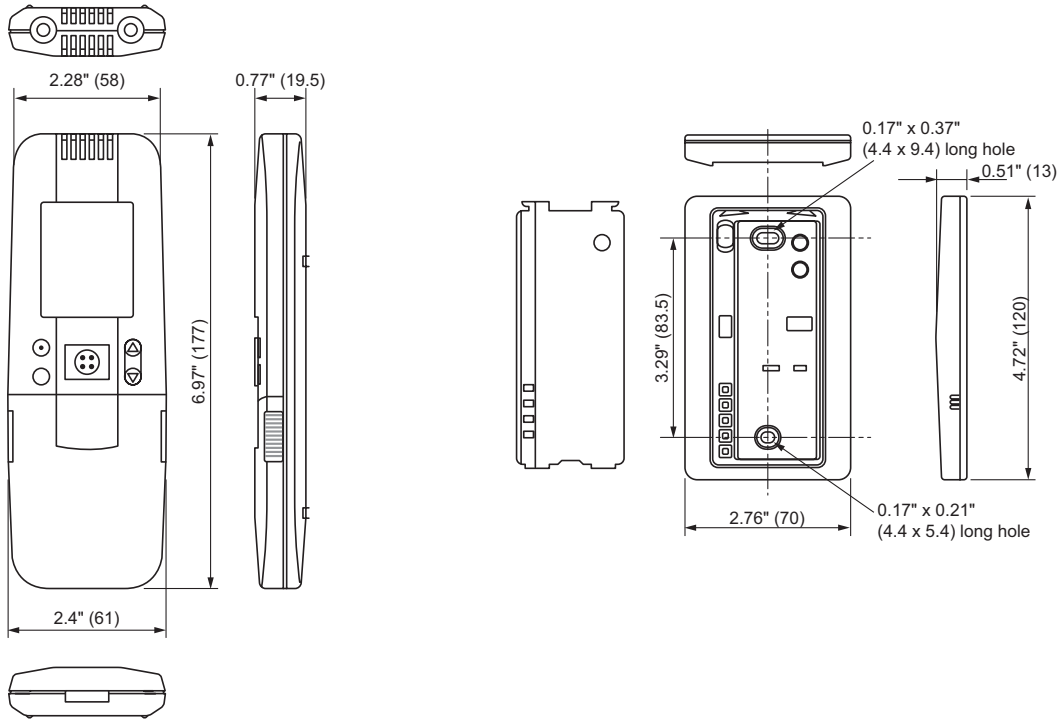


## Wired remote control with weekly timer

**RBC-AMS41UL**

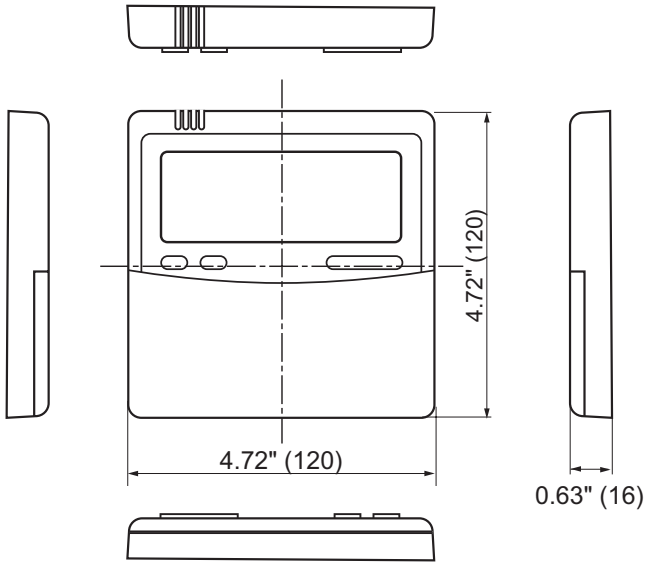

## Remote sensor

### TCB-TC21LUL

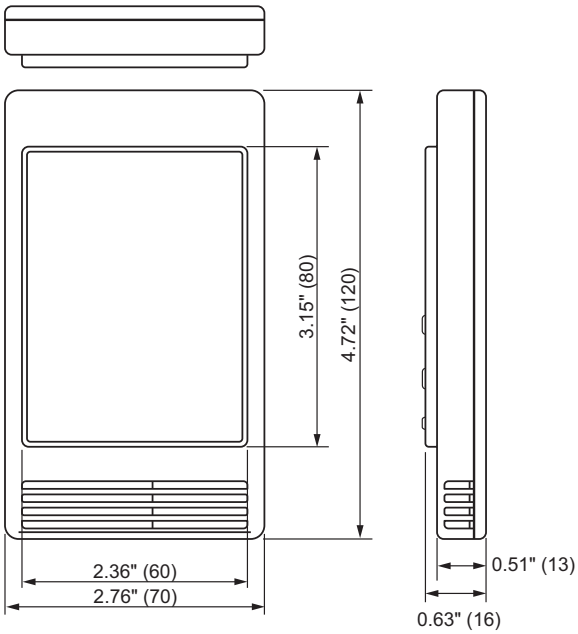


## Remote location ON/OFF control box

### TCB-IFCB-4UL

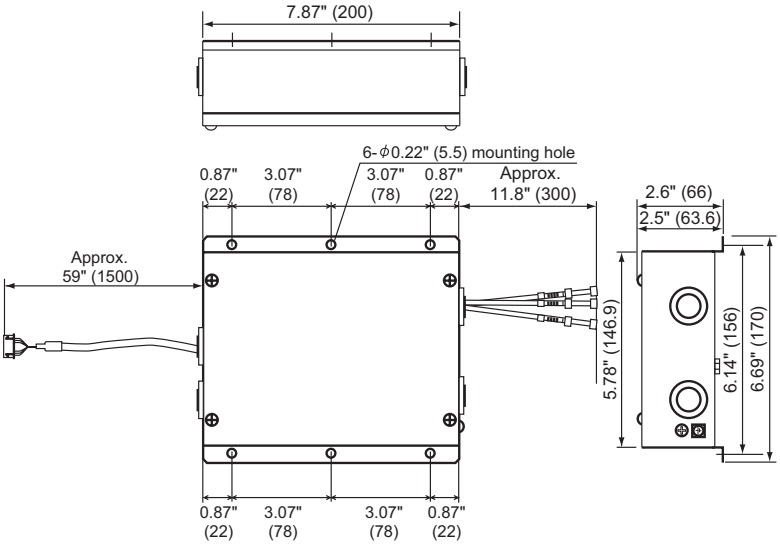

## LN Interface

### TCB-IFLN642TLUL

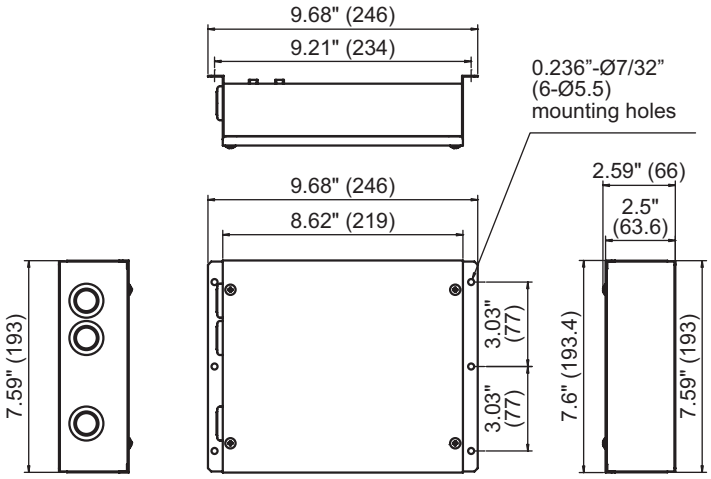


## BACnet server

### BMS-LSV6UL

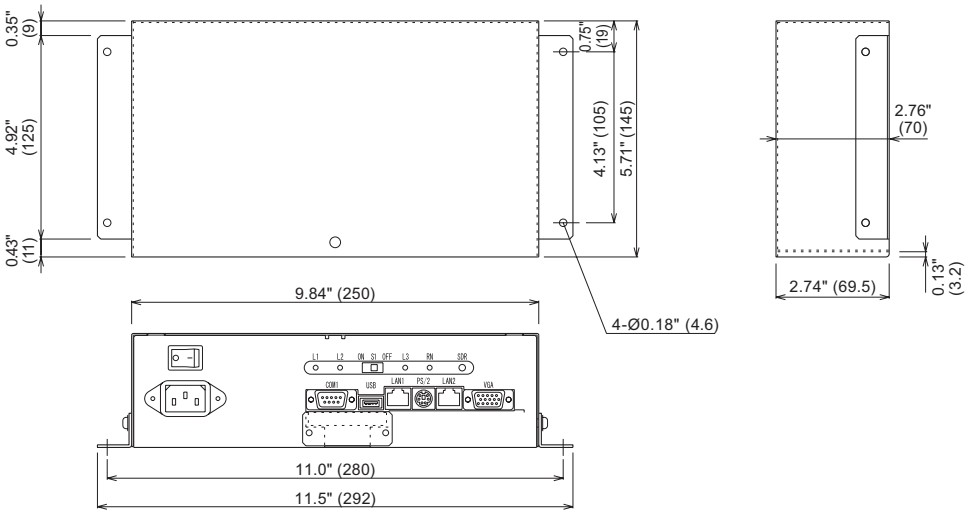

## Central remote control BMS-CM1281TLUL

## Smart Manager BMS-SM1280HTLUL

### Central control

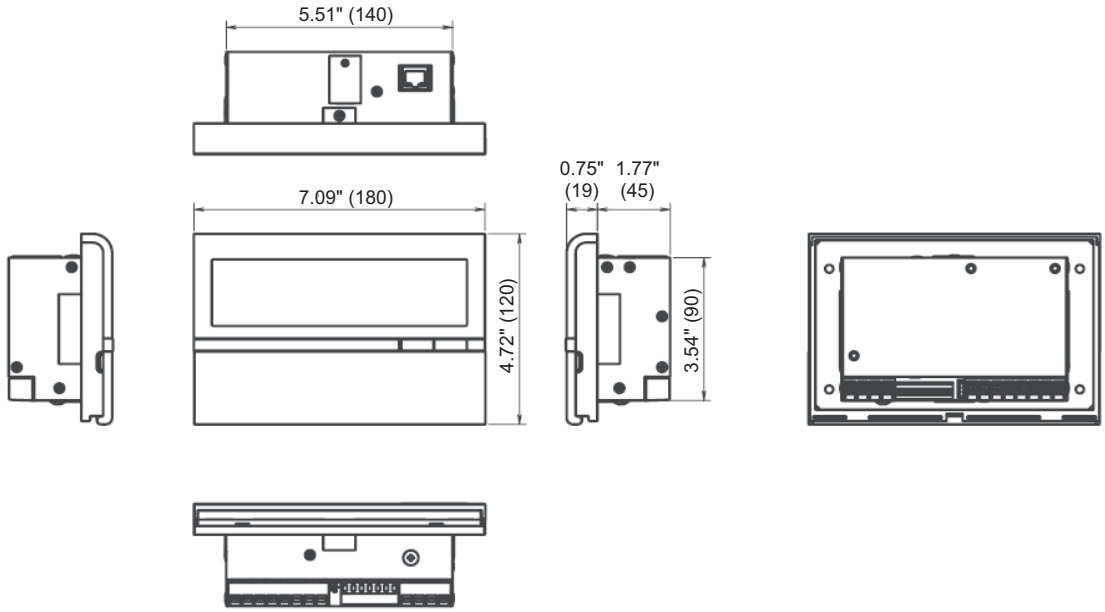


### Power Unit

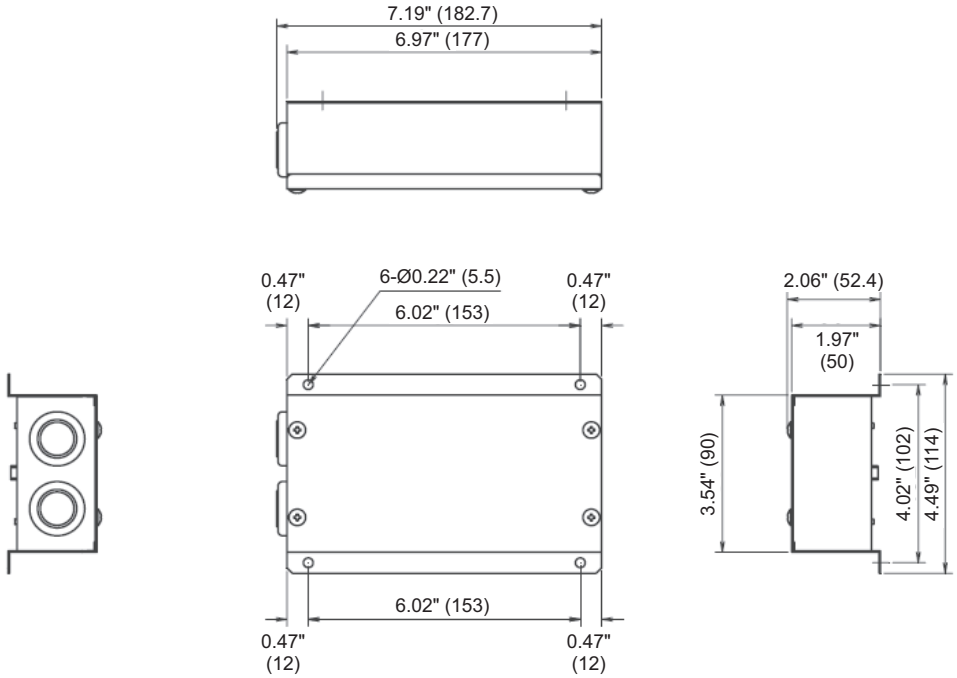

## TCS-Net Relay Interface

### BMS-IFLSV4UL

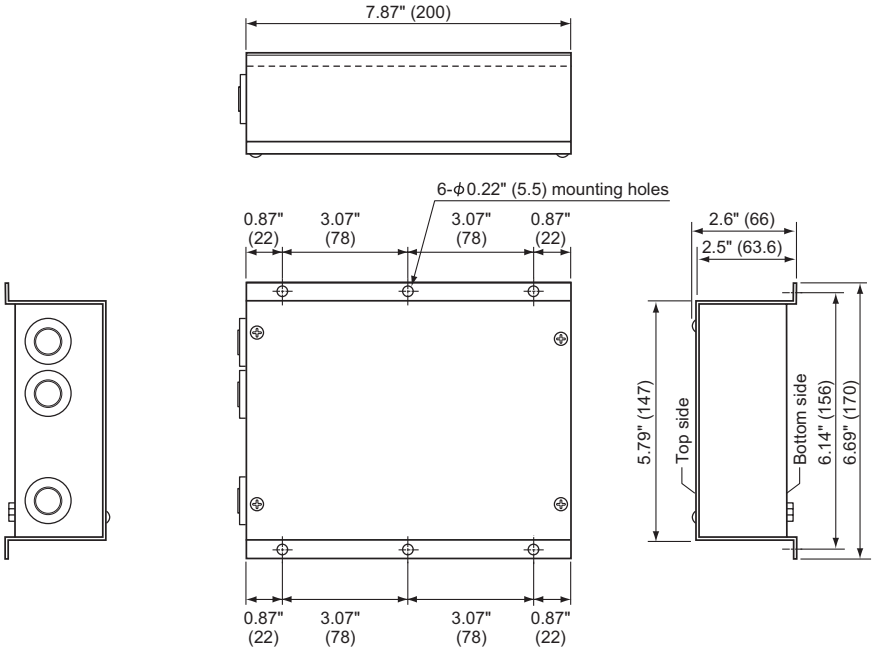


## Digital I/O Relay Interface/Energy Monitoring Relay Interface

### BMS-IFDD03UL/BMS-IFWH5UL

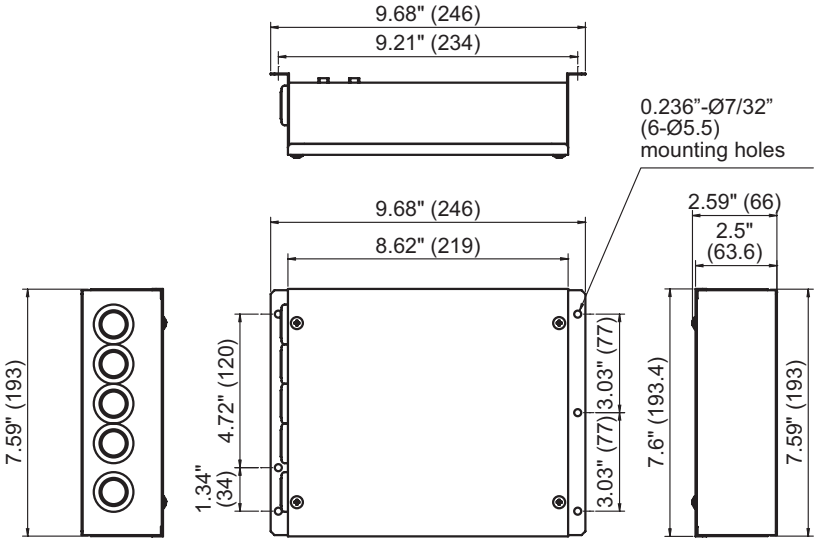

# Dimensions of P.C. board

**Unit: in (mm)**

## TCB-PCDM4UL

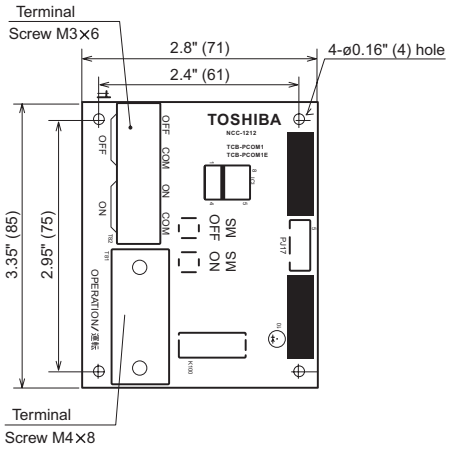


## TCB-PCMO4UL

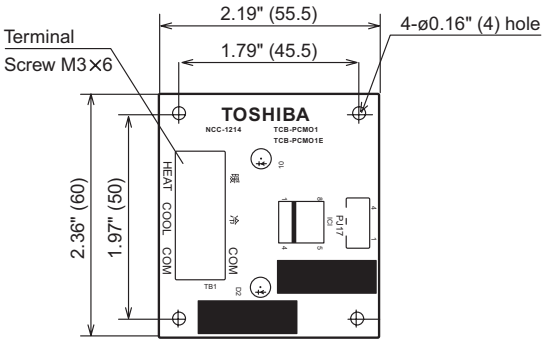


## TCB-PCIN4UL

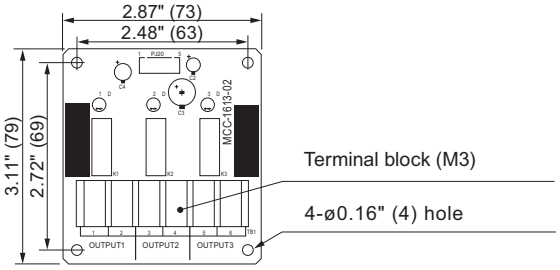


## TCB-PCNT31TLUL

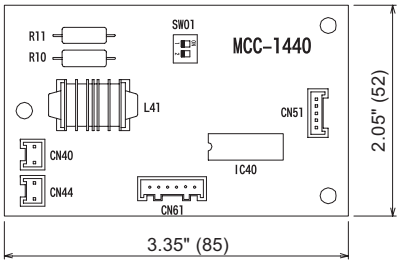

# 5-1. Selection flow chart

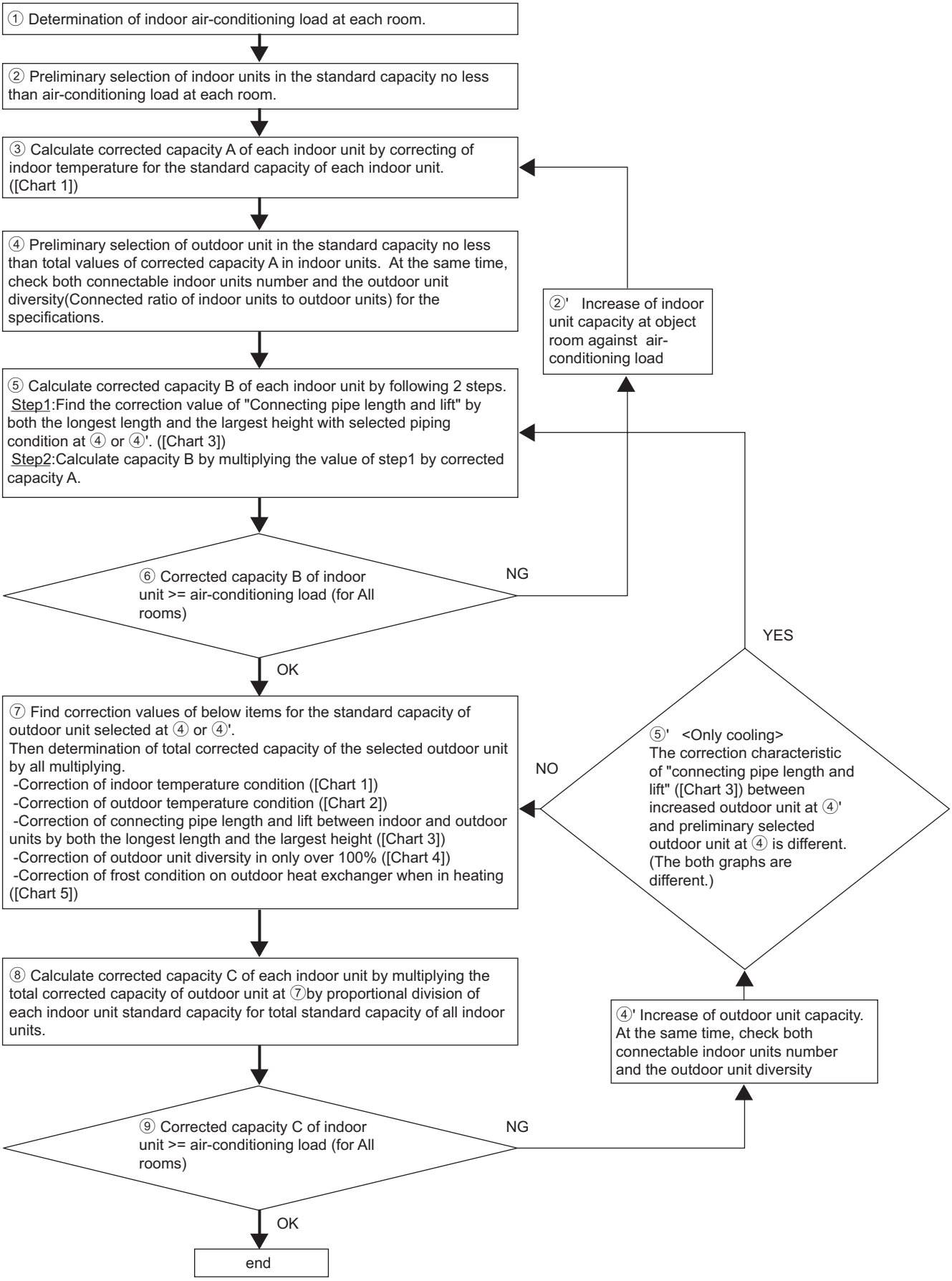

# 5-2. Operational temperature range

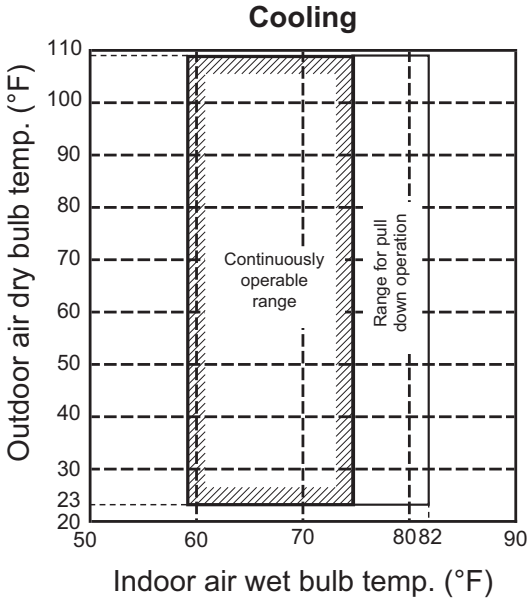


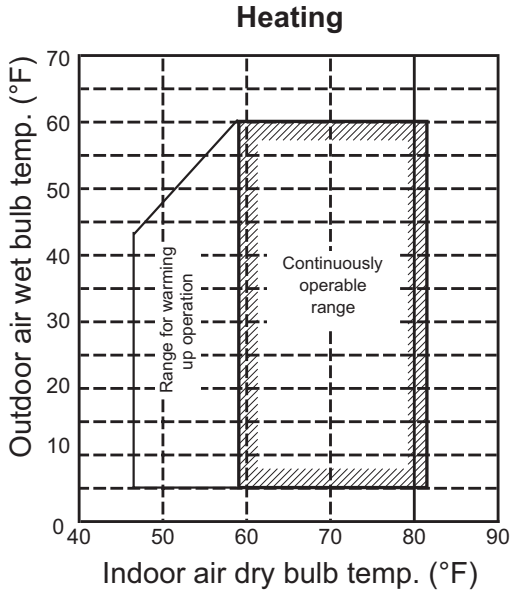

# 5-3. Combination conditions for indoor unit and outdoor unit

5-3-1. The capacity code for indoor unit, the capacity code is decided for each capacity rank.

| Capacity rank type | 007 | 009 | 012 | 015 | 018 | 021 | 024 | 027 | 030 | 036 | 042 | 048 | 054 | 072 | 096 |
|---|---|---|---|---|---|---|---|---|---|---|---|---|---|---|---|
| Capacity code (Equivalent to capacity) | 7.5 | 9.5 | 12 | 15.4 | 18 | 21 | 24 | 27 | 30 | 36 | 42 | 48 | 54 | 72 | 96 |

5-3-2. The capacity codes of outdoor units are decided at each capacity type. The maximum number of connectable indoor units and the total value of capacity codes of the indoor units are also decided.

| Outdoor unit capacity type | Outdoor capacity code (Equivalent to capacity) | Maximum number of indoor units | | | |
|---|---|---|---|---|---|
| | | If "Medium Static Ducted Type (MMD-AP***BH)" is excluded in the system | | If "Medium Static Ducted Type (MMD-AP***BH)" is included in the system | |
| | | Height difference between indoor units | | Height difference between indoor units | |
| | | 49.2ft(15m) or less | Over 49.2ft(15m) | 49.2ft(15m) or less | Over 49.2ft(15m) |
| 072 type | 72 | 12 | 10 | 11 | 10 |
| 096 type | 96 | 16 | 13 | 15 | 13 |
| 114 type | 114 | 19 | 15 | 18 | 15 |
| 144 type | 144 | 24 | 20 | 23 | 20 |
| 168 type | 168 | 28 | 23 | 26 | 23 |
| 192 type | 192 | 32 | 26 | 30 | 26 |
| 228 type | 228 | 38 | 31 | 36 | 31 |

NOTE
Compared with the capacity code of the outdoor unit, the total value of capacity codes of the connectable indoor units differs based on the height difference between the indoor units.

When the height difference between the indoor units is 49.2ft (15m) or less
If "Medium Static Ducted Type (MMD-AP***BH)" is excluded in the system: Total indoor capacity code is between 80% and 125% of the capacity of the outdoor unit.
If "Medium Static Ducted Type (MMD-AP***BH)" is included in the system: Total indoor capacity code is between 80% and 120% of the capacity of the outdoor unit.
When the height difference between the indoor units is over 49.2ft (15m)
Total indoor unit capacity code (Equivalent to Capacity) is between 80% and 105% of the capacity of the outdoor unit.

# 5-4. Cooling/heating capacity characteristics

## 5-4-1. Correction charts for cooling capacity calculation

[Chart 1] Indoor air wet bulb temperature vs. capacity correction value

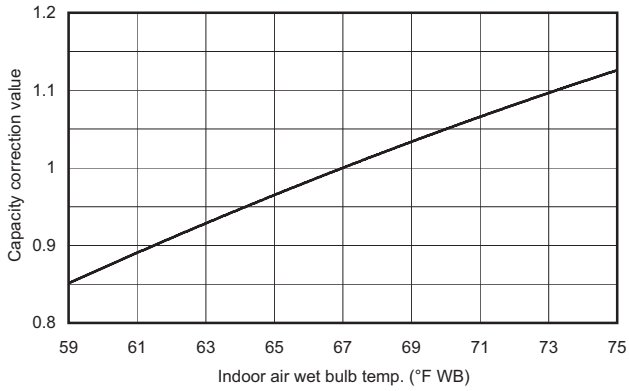


[Chart 2] Outdoor air dry bulb temperature vs. capacity correction value

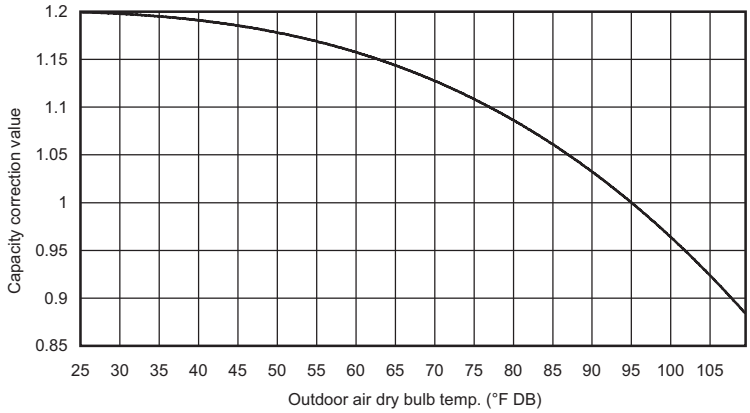


[Chart 3] Connecting pipe length and lift difference between indoor and outdoor units vs. capacity correction value

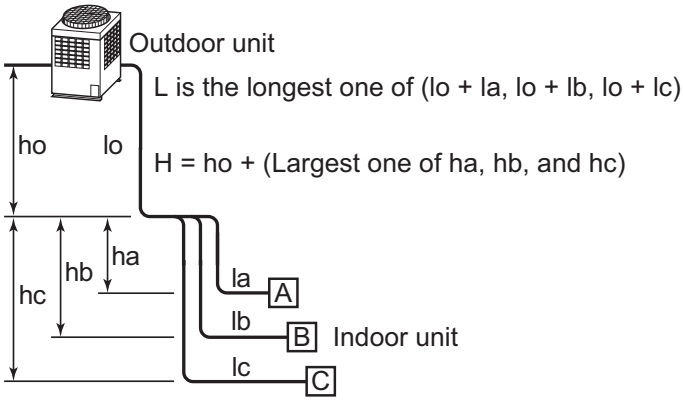


| Outdoor unit capacity type | Graph |
|---|---|
| 072 | A1 |
| 096 | B1 |
| 114 | A2 |
| 144 | A3 |
| 168 | B2 |
| 192 | |
| 228 | A3 |

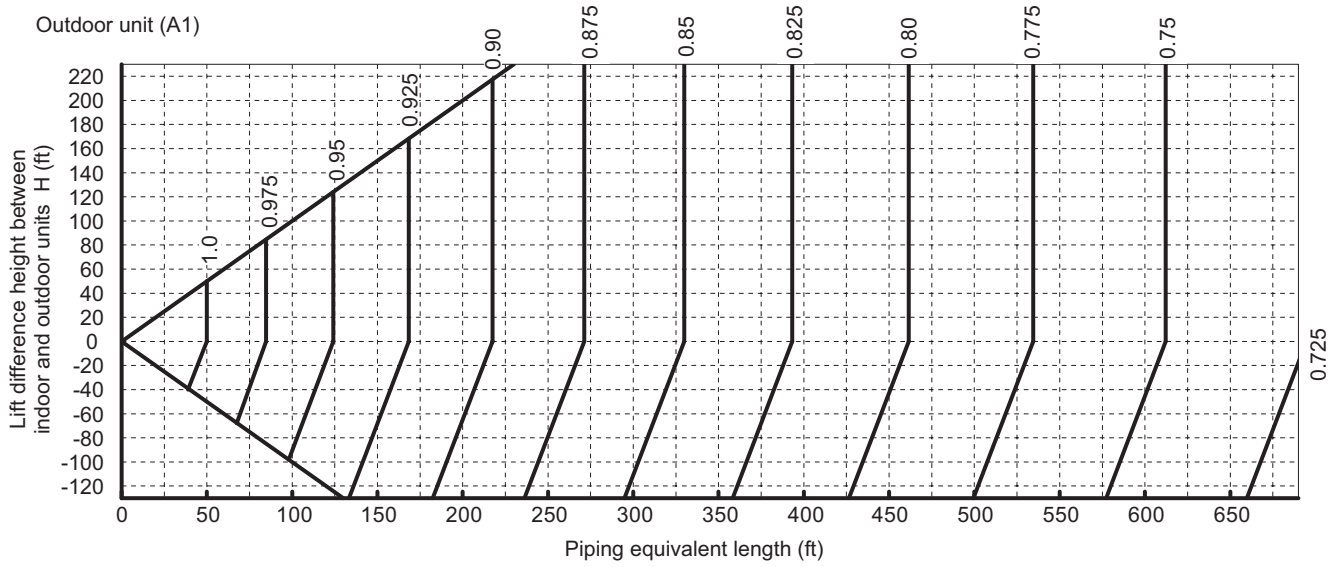
Outdoor unit (A1)
Lift difference height between indoor and outdoor units H (ft)
Piping equivalent length (ft)
1.0
0.975
0.95
0.925
0.90
0.875
0.85
0.825
0.80
0.775
0.75
0.725

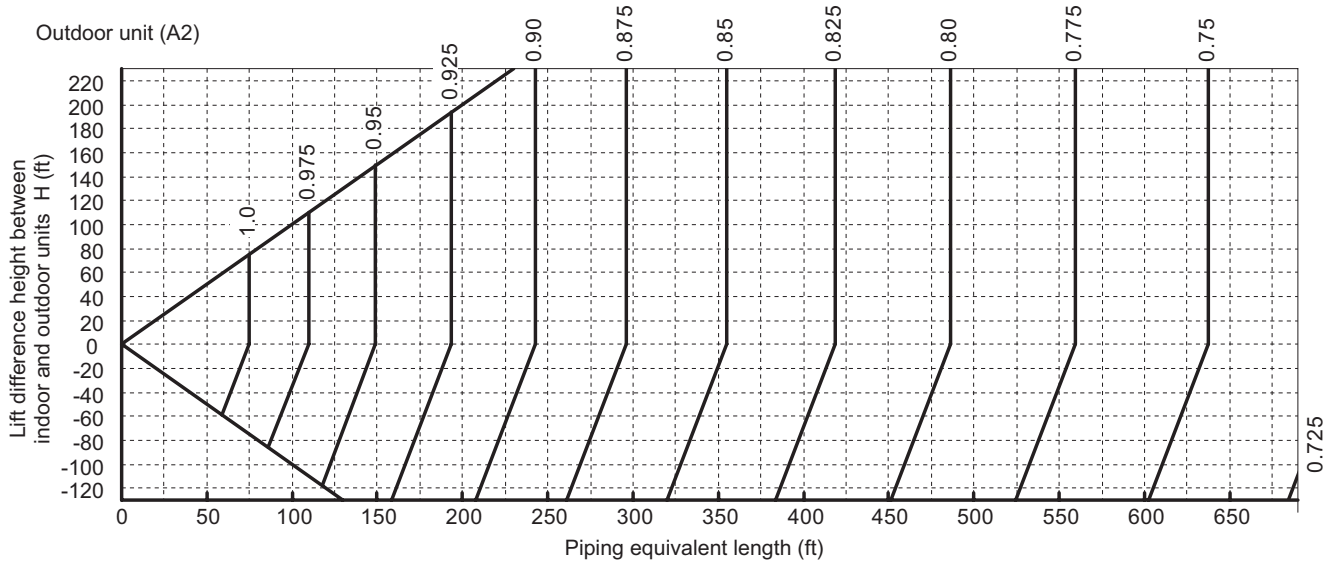
Outdoor unit (A2)
Lift difference height between indoor and outdoor units H (ft)
Piping equivalent length (ft)
1.0
0.975
0.95
0.925
0.90
0.875
0.85
0.825
0.80
0.775
0.75
0.725

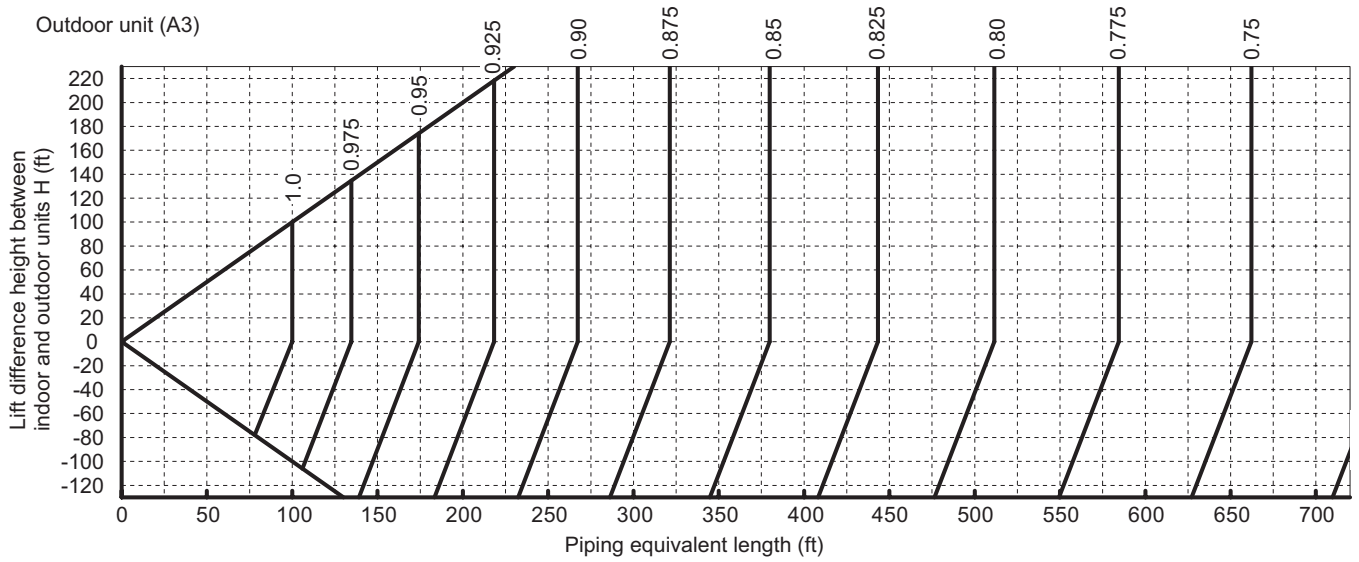
Outdoor unit (A3)
Lift difference height between indoor and outdoor units H (ft)
Piping equivalent length (ft)
1.0
0.975
0.95
0.925
0.90
0.875
0.85
0.825
0.80
0.775
0.75

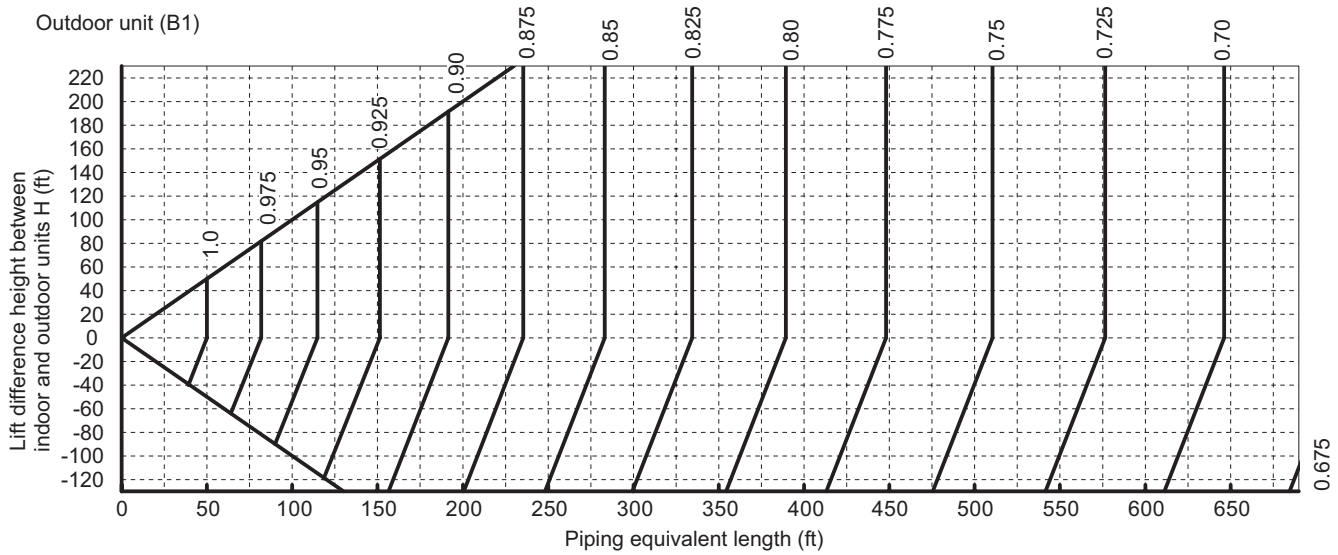


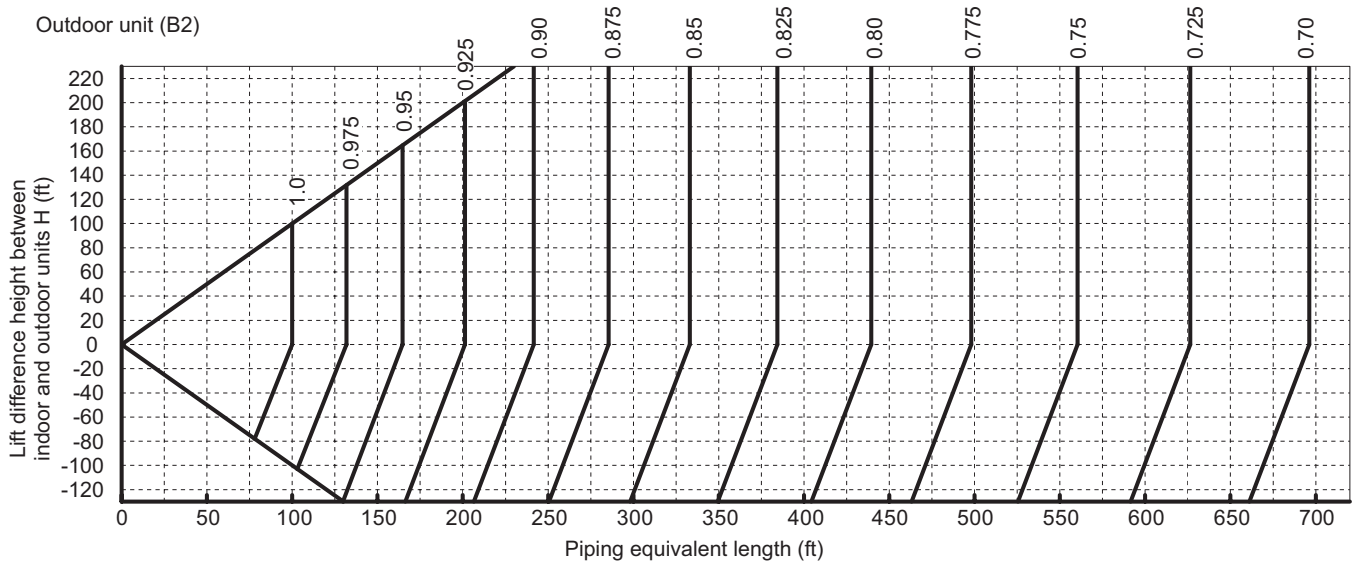


[Chart 4]* Correction of outdoor unit diversity

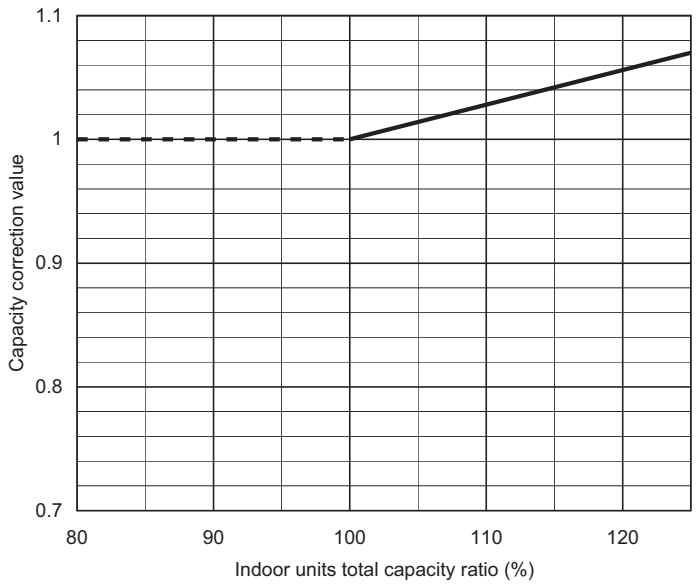


* Coefficient to use for the correction of the outdoor unit capacity when the total capacity of the indoor units are not equal to the outdoor unit capacity.

## 5-4-2. Correction charts for heating capacity calculation

[Chart 1] Indoor air dry bulb temperature vs. capacity correction value

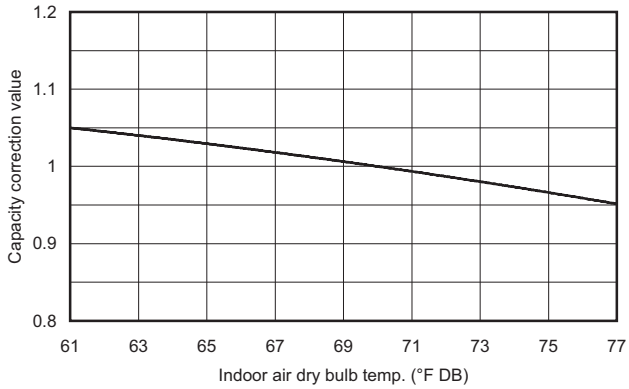


[Chart 2] Outdoor air wet bulb temperature vs. capacity correction value

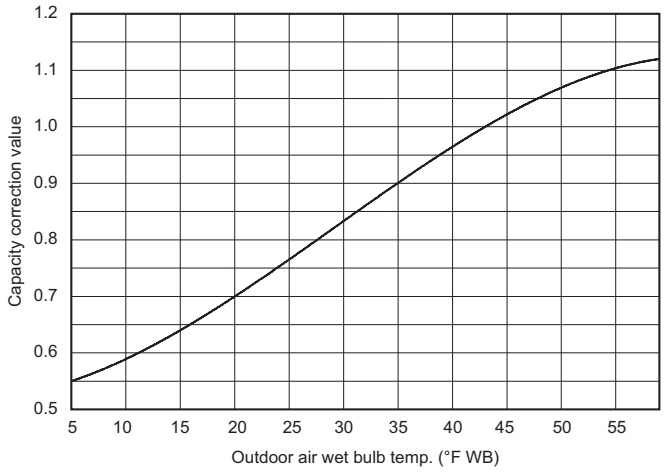


[Chart 3] Connecting pipe length and lift difference between indoor and outdoor units vs. capacity correction value

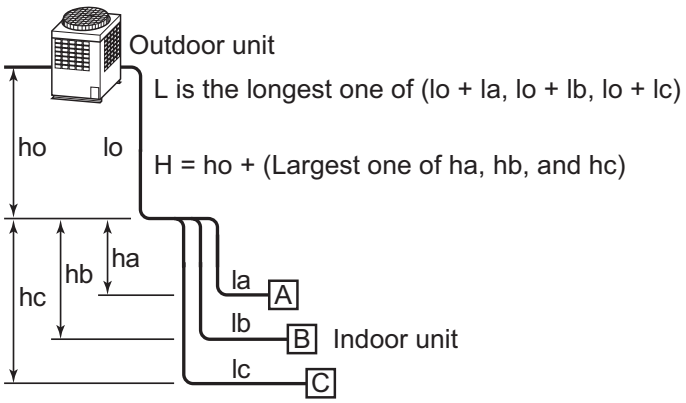


| Outdoor unit capacity type | Graph |
|---|---|
| 072 | X |
| 096 | |
| 114 | Y |
| 144 | Z |
| 168 | |
| 192 | |
| 228 | |

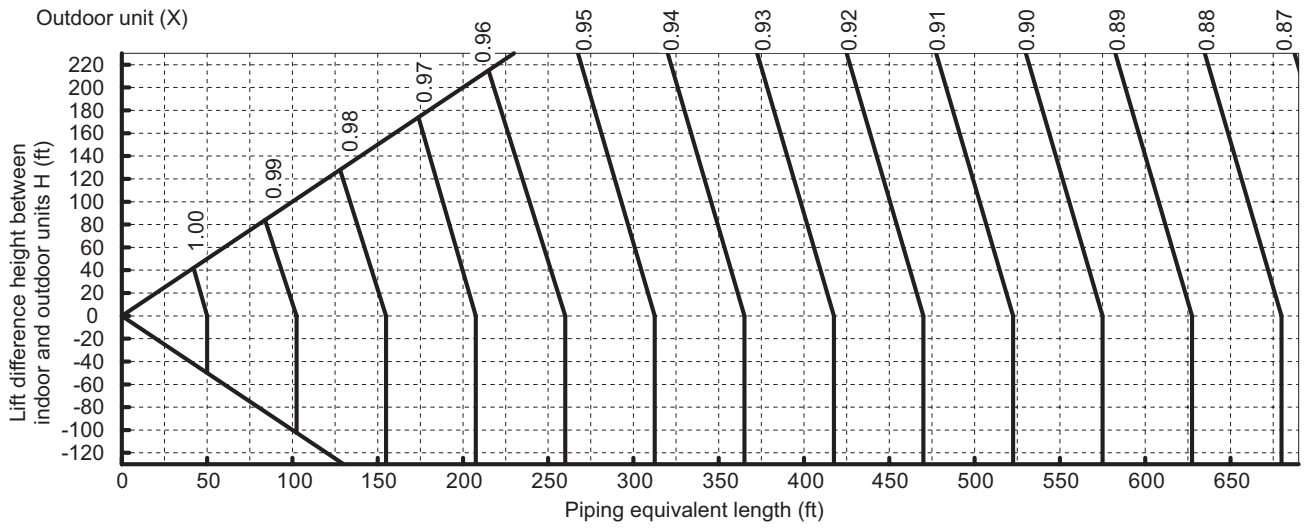
Outdoor unit (X)
Lift difference height between indoor and outdoor units H (ft)
Piping equivalent length (ft)
1.00
0.99
0.98
0.97
0.96
0.95
0.94
0.93
0.92
0.91
0.90
0.89
0.88
0.87

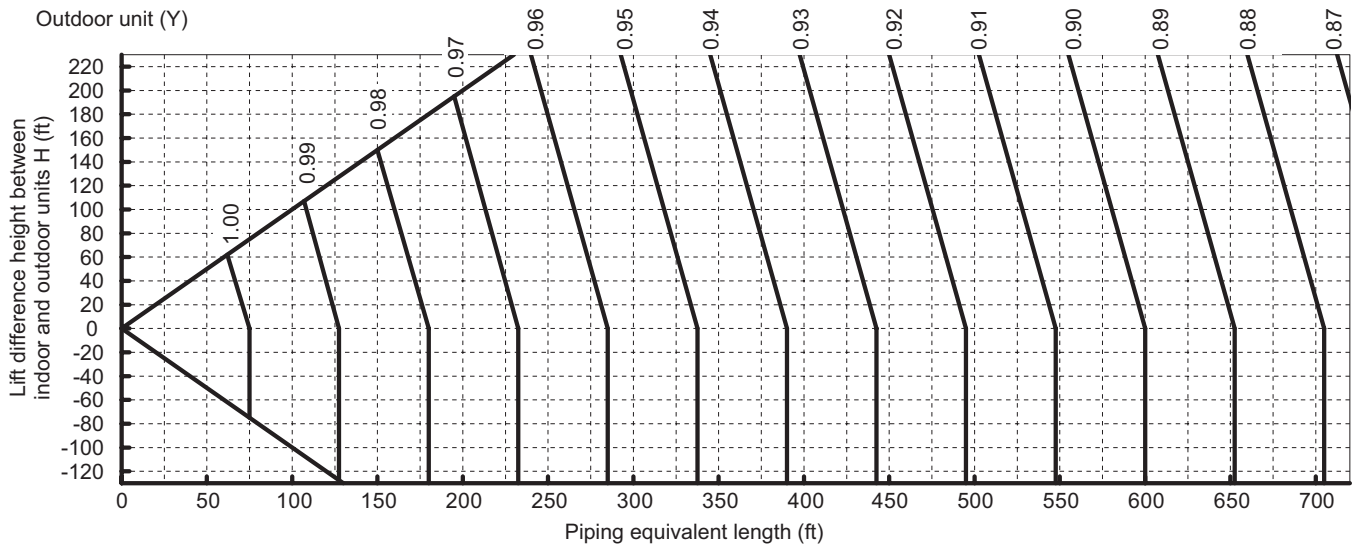
Outdoor unit (Y)
Lift difference height between indoor and outdoor units H (ft)
Piping equivalent length (ft)
1.00
0.99
0.98
0.97
0.96
0.95
0.94
0.93
0.92
0.91
0.90
0.89
0.88
0.87

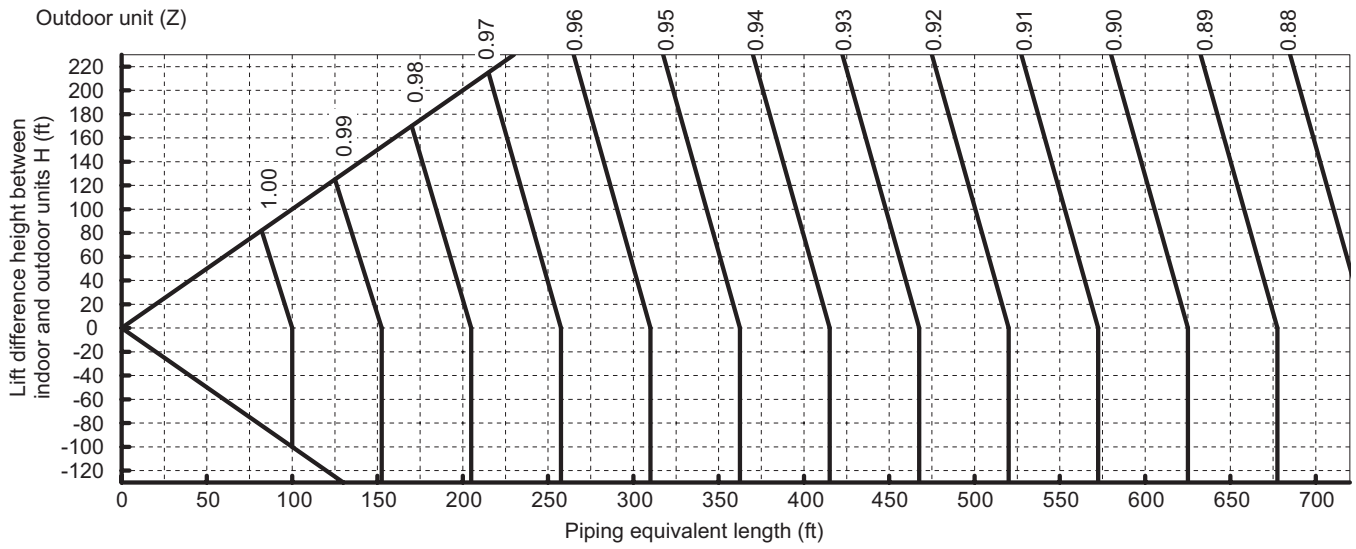
Outdoor unit (Z)
Lift difference height between indoor and outdoor units H (ft)
Piping equivalent length (ft)
1.00
0.99
0.98
0.97
0.96
0.95
0.94
0.93
0.92
0.91
0.90
0.89
0.88

[Chart 4]* Correction of outdoor unit diversity

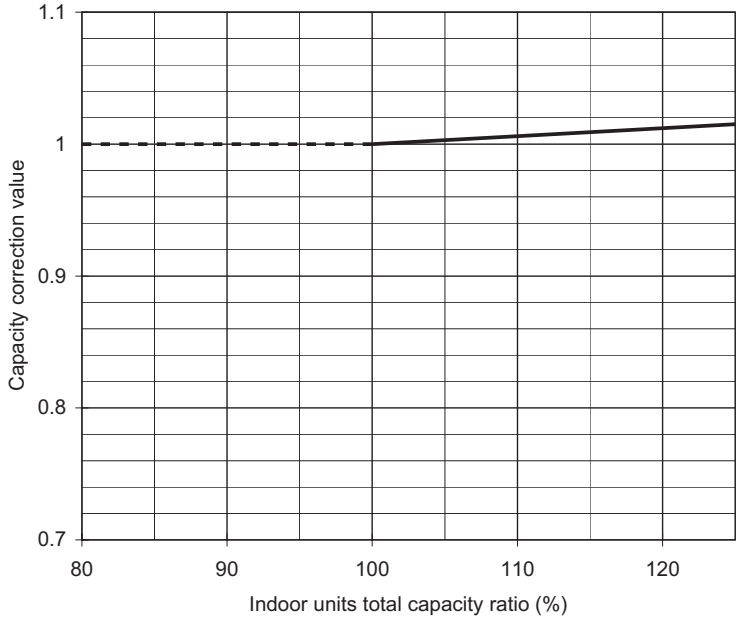


* Coefficient to use for the correction of the outdoor unit capacity when the total capacity of the indoor units are not equal to the outdoor unit capacity.

## 5-4-3. Capacity correction in case of frost on the outdoor heat exchanger when in heating

Correct the heating capacity when frost can be found on the outdoor heat exchanger.
Heating capacity = Capacity after correction of outdoor unit x Correction value of capacity resulted from frost (Capacity after correction of outdoor unit: Heating capacity calculated in the above item 2.)

[Chart 5] Capacity correction in case of frost on the outdoor heat exchanger

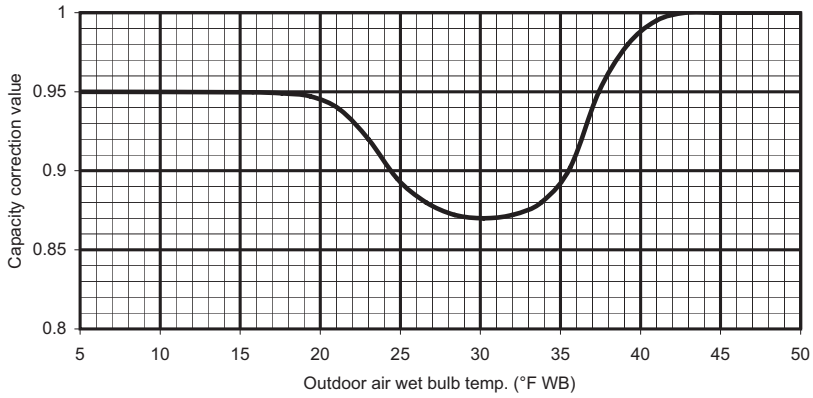


## 5-4-4. Rated conditions

Cooling: Indoor air temperature 80°F DryBulb/67°F WetBulb, Outdoor air temperature 95°F DryBulb
Heating: Indoor air temperature 70°F DryBulb, Outdoor air temperature 47°F DryBulb/43°F WetBulb

# 5-5. Example of equipment selection

**Selection condition**

| | |
|---|---|
| **Indoor temperature**<br>When cooling : 80 FDB/68 FWB<br>When heating : 67 FDB/ -<br>**Equivalent pipe length : 125ft** | **Outdoor temperature**<br>When cooling : 95 FDB/ -<br>When heating : 47 FDB/37 FWB<br>**Height of outdoor unit : 40ft (Outdoor unit upper)** |

| Indoor correction | Temperature correctinon | Piping correction |
|---|---|---|
| Cooling | **1.02** | **0.985** |
| Heating | **1.02** | **0.995** |

(From charts)

## 5-5-1. Capacity correction and selection for indoor unit

① Determinate of indoor air-condition load at each room as shown below table.

② Preliminary select indoor units in standard capacity exceeding air-condition load at each room.

③ Find the correction values from indoor correction charts for both cooling and heating with temperature conditions. (Refer to [**Chart 1**].)

→ *In this case, get correction values, Cooling 1.02 / Heating 1.02*

Then calculate **Capacity A** of each indoor unit.

**Capacity A = Standard capacity x the correction value by indoor unit condition**

④ Preliminary select outdoor unit in standard capacity exceeding total values of **Capacity A**.

At that time, check connectable indoor units number and the outdoor unit diversity (connecting ratio of indoor units HP to outdoor unit HP.)

→ *In this case, select MMY-AP1924HT9UL*

*Cooling capacity : 177.3 < 192* ***OK****, Heating capacity : 199.6 < 212* ***OK****,*

*Number of connectable indoor units : 10 < 32* ***OK****,*

*Outdoor unit diversity(H2 < 49.2ft) : 100% matchs "80 to 125%".* ***OK***

⑤ This part has two steps.

Step1 : Find the correction values of "Connecting pipe length and lift" by both the longest pipe length and the largest height with selected piping condition at ④ both cooling and heating. (Refer to [**Chart 3**].)

→ *In this case, get correction values, Cooling 0.985 / Heating 0.995*

Step2 : Calculate **Capacity B** by multiplying the value of step1 by corrected **Capacity A**.

**Capacity B = Capacity A x the correction value by piping condition of length/lift**

⑥ Compare Capacity B of indoor unit with air-conditioning load (for all rooms).

**Capacity B >= Air-conditioing load (for all room)**

→ *In this case, all Capacity B are bigger than air-conditioning load for both cooling and heating. Go to ⑦.*

| Condition of indoors | | | | Capacity correction and selection for indoor unit | | | | | | |
|---|---|---|---|---|---|---|---|---|---|---|
| | | Air-conditioning load ① | | | Standard capacity ② | | Corrected **Capacity A** ③ | | Corrected **Capacity B** ⑤ | |
| Floor | Room No. | Cooling (kBtu/h) | Heating (kBtu/h) | Model name | Cooling (kBtu/h) | Heating (kBtu/h) | Cooling (kBtu/h) | Heating (kBtu/h) | Cooling (kBtu/h) | Heating (kBtu/h) |
| 3 | 3-1 | 11 | 11.2 | MMU-AP0121MH2UL | 12 | 13.5 | 12.2 | 13.8 | 12.0 | 13.7 |
| | 3-2 | 11 | 11.2 | MMU-AP0121MH2UL | 12 | 13.5 | 12.2 | 13.8 | 12.0 | 13.7 |
| | 3-3 | 11 | 11.2 | MMU-AP0121MH2UL | 12 | 13.5 | 12.2 | 13.8 | 12.0 | 13.7 |
| | 3-4 | 11 | 11.2 | MMU-AP0121MH2UL | 12 | 13.5 | 12.2 | 13.8 | 12.0 | 13.7 |
| | 3-5 | 11 | 11.2 | MMU-AP0121MH2UL | 12 | 13.5 | 12.2 | 13.8 | 12.0 | 13.7 |
| 2 | 2-1 | 32 | 34 | MMC-AP0361H2UL | 36 | 40 | 36.7 | 40.8 | 36.1 | 40.6 |
| 1 | 1-1 | 16 | 16.8 | MMU-AP0182H2UL | 18 | 20 | 18.4 | 20.4 | 18.1 | 20.3 |
| | 1-2 | 16 | 16.8 | MMU-AP0182H2UL | 18 | 20 | 18.4 | 20.4 | 18.1 | 20.3 |
| | 1-3 | 18.6 | 20 | MMU-AP0212H2UL | 21 | 24 | 21.4 | 24.5 | 21.1 | 24.4 |
| | 1-4 | 18.6 | 20 | MMU-AP0212H2UL | 21 | 24 | 21.4 | 24.5 | 21.1 | 24.4 |
| Total | | 156.2 | 163.6 | | 174 | 195.5 | 177.3 | 199.6 | 174.6 | 198.5 |

**[Chart 1]**

**Cooling**

**Indoor air wet bulb temperature vs. capacity correction**

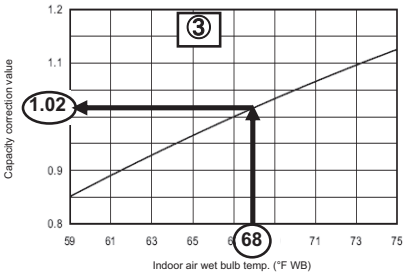


**Heating**

**Indoor air dry bulb temperature vs. capacity correction**

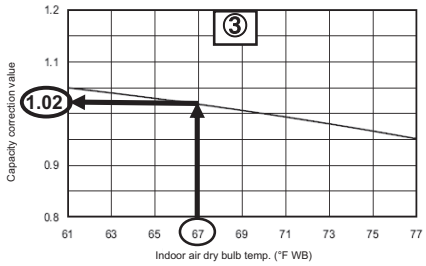


**Outdoor unit** ④

| Type | Model Name MMY- | Capacity Type | Cooling capacity (kBtu/h) | Heating capacity (kBtu/h) |
|---|---|---|---|---|
| Combination | AP1924HT9UL | 192type | 192 | 212 |

④

| Outdoor unit capacity type | Outdoor capacity code (Equivalent to capacity) | Maximum number of indoor units | | | |
|---|---|---|---|---|---|
| | | If "Medium Static Ducted Type (MMD-AP***BH)" is excluded in the system | | If "Medium Static Ducted Type (MMD-AP***BH)" is included in the system | |
| | | Height difference between indoor units | | Height difference between indoor units | |
| | | 49.2ft(15m) or less | Over 49.2ft(15m) | 49.2ft(15m) or less | Over 49.2ft(15m) |
| 072 type | 72 | 12 | 10 | 11 | 10 |
| 096 type | 96 | 16 | 13 | 15 | 13 |
| 114 type | 114 | 19 | 15 | 18 | 15 |
| 144 type | 144 | 24 | 20 | 23 | 20 |
| 168 type | 168 | 28 | 23 | 26 | 23 |
| 192 type | 192 | 32 | 26 | 30 | 26 |
| 228 type | 228 | 38 | 31 | 36 | 31 |

**Selection of piping chart by selected outdoor unit**

**Cooling**

| Model type | Pipe length(ft) | Graph |
|---|---|---|
| 072 | 690 | A1 |
| 096 | | B1 |
| 114 | | A2 |
| 144 | | A3 |
| 168 | 720 | B2 |
| 192 | | |
| 228 | | A3 |

⑤–1

**Heating**

| Model type | Pipe length(ft) | Graph |
|---|---|---|
| 072 | 690 | X |
| 096 | | |
| 114 | | Y |
| 144 | | |
| 168 | 720 | Z |
| 192 | | |
| 228 | | |

⑤–1

**[Chart 3] Connecting pipe length and lift between indoor and outdoor units vs. capacity**

**Cooling**

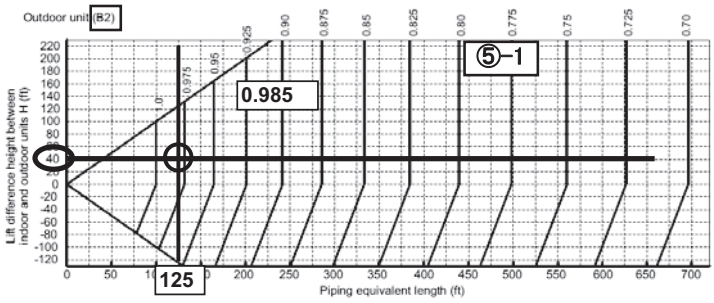


**Heating**

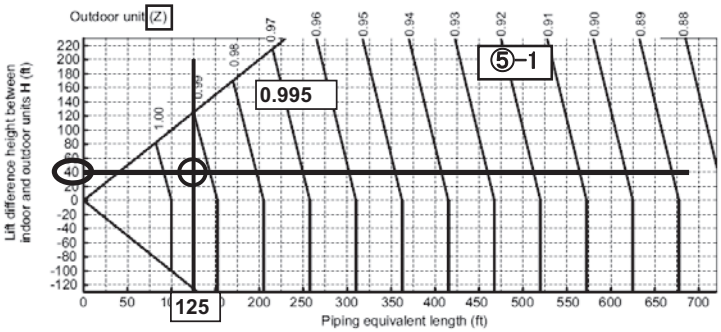

## 5-5-2. Capacity correction and selection for oudoor unit

⑦ Find the correction values of following five items for the standard capacity of outdoor unit selected at ④. Then determination of total corrected capacity of the selected outdoor unit by all multiplying.

**Corrected capacity of outdoor unit = Standard capacity of selected outdoor unit**

- **x Correction value by the indoor temperature condition** (Refer to [**Chart 1**].)
- **x Correction value by the outdoor temperature condition** (Refer to [**Chart 2**].)
- **x Correction value by connecting pipe length and lift between indoor and outdoor units** (Refer to [**Chart 3**].)
- **x Correction value by outdoor unit diversity in only over 100%** (Refer to [**Chart 4**].)
- **x Correction value by frost condition on outdoor heating exchanger in heating** (Refer to [**Chart 5**].)

→ *In this case, these five correction values are bewlow.*

Correction value by the indoor temperature condition : Cooling 1.02 / Heating 1.02 (sama as ③)
Correction value by the outdoor temperature condition : Cooling 1.0 / Heating 0.92 (Find both values by [chart 2])
Correction value by connecting pipe length and lift between indoor and outdoor units : Cooling 0.985 / Heating 0.995 (sama as ⑤-1.)
Correction value by outdoor unit diversity : Cooling - / Heating - (below 100%)
Correction value by frost condition on outdoor heating exchanger in only heating : Cooling - / Heating 0.94 (Find the value by [chart 5])

*Corrected capacity of outdoor unit : Cooling 192kBtu/h x 1.02 x 1.0 x 0.985 =* ***192.9kBtu/h***
*Heating 212kBtu/h x 1.02 x 0.92 x 0.995 x 0.94 =* ***186.1kBtu/h***

⑧ Calculate **Capacity C** of each indoor unit by multiplying the corrected capacity of outdoor unit at ⑦ by proportinal division of each indoor unit standard capacity for total standard capacity of all indoor units.

**Capacity C = Corrected capacity of outdoor unit x (Each indoor unit standard capacity / total standard capacity of all indoor units)**

→ *In this case, the example of "3-1" is the following.*
*Cooling : **Capacity C** = 192.9kBtu/h x (12kBtu/h / 174kBtu/h) =* ***13.3kBtu/h***
*Heating : **Capacity C** = 186.1kBtu/h x (13.5kBtu/h / 195.5kBtu/h) =* ***12.9kBtu/h***
*Calculate Capacity C of remain rooms by the similar method.*

⑨ Compare Capacity C of indoor unit with air-conditioning load (for all rooms).

**Capacity C >= Air-conditioing load (for all room)**

→ *In this case, all Capacity C are bigger than air-conditioning load for both cooling and heating. All rooms are OK and* ***selection ends****.*

**[Chart 2]**

**Cooling**

**Outdoor air dry bulb temperature vs. capacity correction value**

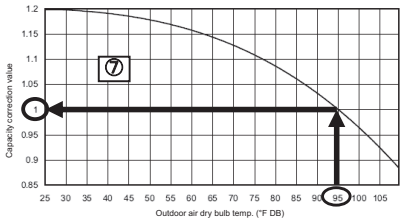


**Heating**

**Outdoor air wet bulb temperature vs. capacity correction value**

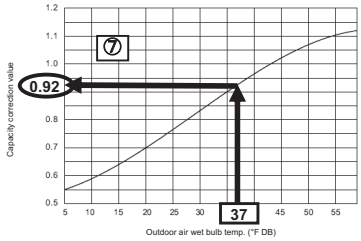


**Correction of outdoor unit diversity**

***Cooling : 174kBtu/h / 192kBtu/h x 100 = 91% < 100%*** ⑦
***→ Nonuse of this correction***

Total standard capacity of indoor units

Standard capacity of outdoor units

***Heating : 195.5kBtu/h / 212kBtu/h x 100 = 92% < 100%*** ⑦
***→ Nonuse of this correction***

Total standard capacity of indoor units

Standard capacity of outdoor units

**[Chart 5] Frost on the outdoor heatexchanger in heating**

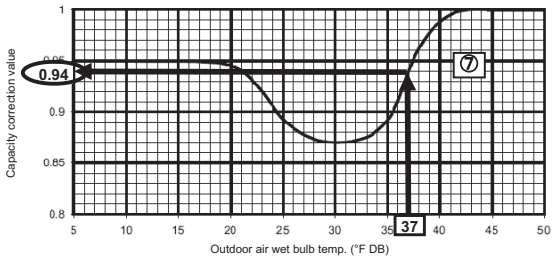

## 5-5-3. Result of selection example

### Selection condition

| | |
|---|---|
| **Indoor temperature**<br>When cooling : 80 FDB/68 FWB<br>When heating : 67 FDB/ -<br>**Equivalent pipe length : 125ft** | **Outdoor temperature**<br>When cooling : 95 FDB/ -<br>When heating : 47 FDB/37 FWB<br>**Height of outdoor unit : 40ft (Outdoor unit upper)** |

| Indoor correction | Temperature correctinon | Piping correction |
|---|---|---|
| Cooling | **1.02** | **0.985** |
| Heating | **1.02** | **0.995** |

(From charts)

### Preliminary selection of indoor units (with outdoor unit) by each air-conditioning load

| Condition of indoors | | | | Capacity correction and selection for indoor unit | | | | | | |
|---|---|---|---|---|---|---|---|---|---|---|
| Floor | Room No. | Air-conditioning load | | Model name | Standard capacity | | Corrected **Capacity A** | | Corrected **Capacity B** | |
| | | Cooling | Heating | | Cooling | Heating | Cooling | Heating | Cooling | Heating |
| | | (kBtu/h) | (kBtu/h) | | (kBtu/h) | (kBtu/h) | (kBtu/h) | (kBtu/h) | (kBtu/h) | (kBtu/h) |
| 3 | 3-1 | 11 | 11.2 | MMU-AP0121MH2UL | 12 | 13.5 | 12.2 | 13.8 | 12.0 | 13.7 |
| | 3-2 | 11 | 11.2 | MMU-AP0121MH2UL | 12 | 13.5 | 12.2 | 13.8 | 12.0 | 13.7 |
| | 3-3 | 11 | 11.2 | MMU-AP0121MH2UL | 12 | 13.5 | 12.2 | 13.8 | 12.0 | 13.7 |
| | 3-4 | 11 | 11.2 | MMU-AP0121MH2UL | 12 | 13.5 | 12.2 | 13.8 | 12.0 | 13.7 |
| | 3-5 | 11 | 11.2 | MMU-AP0121MH2UL | 12 | 13.5 | 12.2 | 13.8 | 12.0 | 13.7 |
| 2 | 2-1 | 32 | 34 | MMC-AP0361H2UL | 36 | 40 | 36.7 | 40.8 | 36.1 | 40.6 |
| 1 | 1-1 | 16 | 16.8 | MMU-AP0182H2UL | 18 | 20 | 18.4 | 20.4 | 18.1 | 20.3 |
| | 1-2 | 16 | 16.8 | MMU-AP0182H2UL | 18 | 20 | 18.4 | 20.4 | 18.1 | 20.3 |
| | 1-3 | 18.6 | 20 | MMU-AP0212H2UL | 21 | 24 | 21.4 | 24.5 | 21.1 | 24.4 |
| | 1-4 | 18.6 | 20 | MMU-AP0212H2UL | 21 | 24 | 21.4 | 24.5 | 21.1 | 24.4 |
| Total | | 156.2 | 163.6 | | 174 | 195.5 | 177.3 | 199.6 | 174.6 | 198.5 |

| Preliminary selection of outdoor unit | | |
|---|---|---|
| Model name | Cooling | Heating |
| | (kBtu/h) | (kBtu/h) |
| MMY-AP1924HT9UL<br>(Combination model) | 192 | 212 |

### Selection of outdoor unit / indoor units

| Floor | Room No. | Pipe length(ft) | Corrected capacity of outdoor unit (kBtu/h) | | | Corrected **Capacity C** (⑧) | |
|---|---|---|---|---|---|---|---|
| | | Equivalent length & lift | Item | Correction of cooling capacity | Correction of heating capacity | Cooling | Heating |
| | | | | | | (kBtu/h) | (kBtu/h) |
| 3 | 3-1 | 125 / 40<br>(Outdoor unit upper) | Standard capacity | 192 | 212 | 13.3 | 12.9 |
| | 3-2 | | | | | 13.3 | 12.9 |
| | 3-3 | | Indoor temperature | 1.02 | 1.02 | 13.3 | 12.9 |
| | 3-4 | | | | | 13.3 | 12.9 |
| | 3-5 | | Outdoor temperature | 1.0 | 0.92 | 13.3 | 12.9 |
| 2 | 2-1 | | | | | 39.9 | 38.1 |
| 1 | 1-1 | | Connecting pipe length and lift | 0.985 | 0.995 | 20.0 | 19.0 |
| | 1-2 | | | | | 20.0 | 19.0 |
| | 1-3 | | Outdoor unit diversity | - | - | 23.3 | 22.8 |
| | 1-4 | | | | | 23.3 | 22.8 |
| | | | Frost on heating exchanger | - | 0.94 | | |
| Total | | | | 192.9 (⑦) | 186.1 (⑦) | 193.0 | 186.2 |

### Judgment result

| Condition of indoors | | | | Equipment selection | | | | Judgment result (⑨) | |
|---|---|---|---|---|---|---|---|---|---|
| Floor | Room No. | Air-conditioning load | | Model name | Type | Corrected **Capacity C** | | | |
| | | Cooling | Heating | | | Cooling | Heating | Cooling | Heating |
| | | (kBtu/h) | (kBtu/h) | | | (kBtu/h) | (kBtu/h) | | |
| 3 | 3-1 | 11 | 11.2 | MMU-AP0121MH2UL | Compact 4-Way Cassette | 13.3 | 12.9 | OK | OK |
| | 3-2 | 11 | 11.2 | MMU-AP0121MH2UL | | 13.3 | 12.9 | OK | OK |
| | 3-3 | 11 | 11.2 | MMU-AP0121MH2UL | | 13.3 | 12.9 | OK | OK |
| | 3-4 | 11 | 11.2 | MMU-AP0121MH2UL | | 13.3 | 12.9 | OK | OK |
| | 3-5 | 11 | 11.2 | MMU-AP0121MH2UL | | 13.3 | 12.9 | OK | OK |
| 2 | 2-1 | 32 | 34 | MMC-AP0361H2UL | Ceiling | 39.9 | 38.1 | OK | OK |
| 1 | 1-1 | 16 | 16.8 | MMU-AP0182H2UL | 4-Way Cassette | 20.0 | 19.0 | OK | OK |
| | 1-2 | 16 | 16.8 | MMU-AP0182H2UL | | 20.0 | 19.0 | OK | OK |
| | 1-3 | 18.6 | 20 | MMU-AP0212H2UL | | 23.3 | 22.8 | OK | OK |
| | 1-4 | 18.6 | 20 | MMU-AP0212H2UL | | 23.3 | 22.8 | OK | OK |
| Total | | 156.2 | 163.6 | | | 193 | 186.2 | OK | OK |

**Example: Equipment selection based on system load profile**

Since the five rooms on the floor face different directions, their hourly cooling load profile will be also different. We select each indoor unit based on the individual room peak load. However, we need to use the total load profile on the floor as a base to choose the outdoor module.

**• Load in each room**

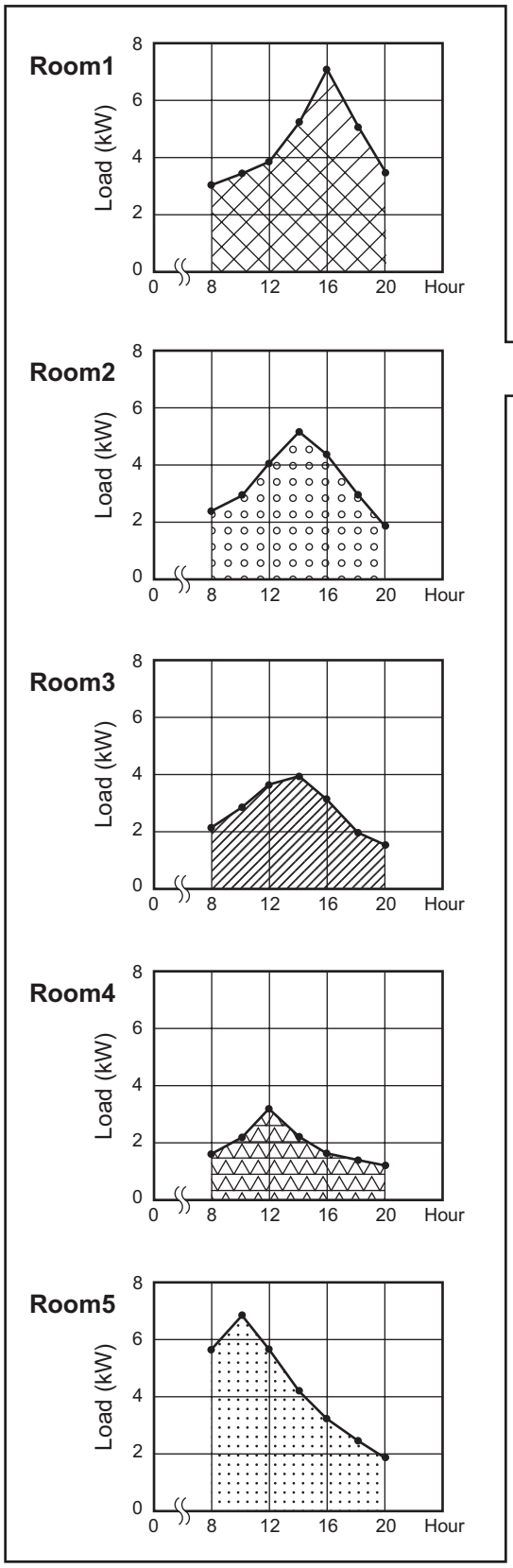


**• Total load in all rooms**

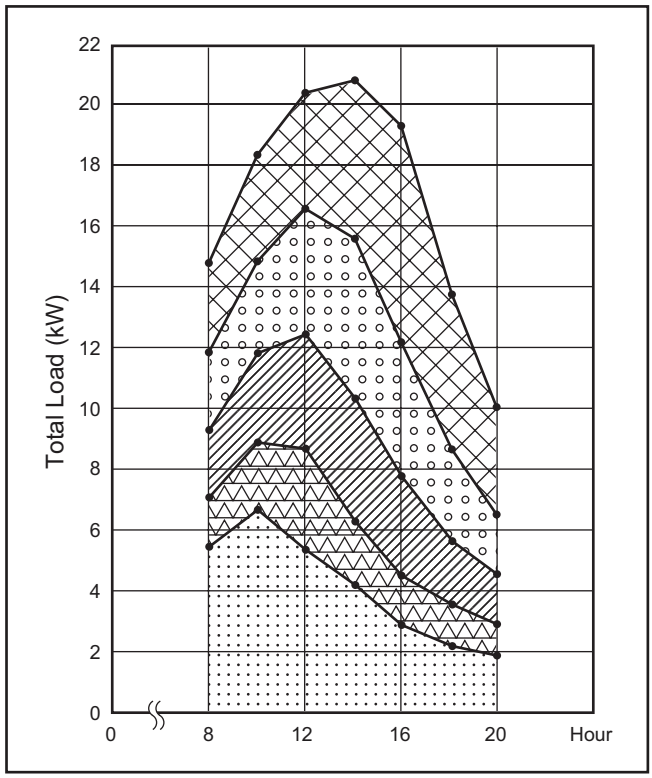


1. The total load on the floor is calculated by adding the hourly cooling loads of the five rooms.
2. The maximum value of total load is used to select outdoor module.

# 6-1. Outdoor Unit

## 6-1-1. Specifications

### 6-1-1-1. 208/230V model

**Single unit (System with Non-ducted indoor units)**

| Outdoor unit model name | | | | MMY- | MAP0724HT9UL | MAP0964HT9UL | MAP1144HT9UL |
|---|---|---|---|---|---|---|---|
| Cooling Capacity | | | (*1) | kBtu/h | 72 | 96 | 112 |
| Heating Capacity | | | (*1) | kBtu/h | 81 | 108 | 130 |
| Electrical charastaristics (*1) | Power supply | | (*2) | | 230V (208/230V) 3phase 60Hz | | |
| | Cooling | Power consumption | (*3) | kW | 6.44 | 8.57 | 9.97 |
| | | EER | | Btu/W | 11.2 | 11.2 | 11.2 |
| | Heating | Power consumption | (*3) | kW | 6.69 | 9.44 | 11.16 |
| | | COP | | W/W | 3.55 | 3.35 | 3.41 |
| | Starting Current | | | A | Soft Start | | |
| Dimension | Unit | Height | | in | 72.8 | 72.8 | 72.8 |
| | | Width | | in | 39.0 | 47.6 | 47.6 |
| | | Depth | | in | 30.7 | 30.7 | 30.7 |
| | Packing | Height | | in | 76.3 | 76.3 | 76.3 |
| | | Width | | in | 41.8 | 50.5 | 50.5 |
| | | Depth | | in | 32.6 | 32.6 | 32.6 |
| Total Weight | Unit | | | lb | 546 | 742 | 742 |
| | Packed unit | | | lb | 579 | 779 | 779 |
| Colour | | | | | Silky shade (Munsell 1Y8.5/0.5) | | |
| Compressor | | Type | | | Hermetic twin rotary compressor | | |
| | | Motor output | | kW | 2.3 x 2 | 2.1 x 3 | 2.5 x 3 |
| Fan unit | | Fan | | | Propeller fan | | |
| | | Motor output | | kW | 1.0 | 1.0 | 1.0 |
| | | Air volume | | cfm | 5,800 | 6,600 | 7,060 |
| Refrigerant | | | | | R410A | | |
| | Charged refrigerant amount | | (*4) | lb | 25.4 | 25.4 | 25.4 |
| Heat exchanger | | | | | Finned tube | | |
| High-pressure switch | | | | psi | OFF:420 ON:540 | | |
| Protective devices | | | | | High-pressure switch / High-pressure sensor / Low-pressure sensor / Fusible plug<br>PC board fuse / Inverter overload protector | | |
| Electrical specifications | Unit | MCA | (*5) | A | 36 | 50 | 52 |
| | | MOCP | (*6) | A | 40 | 60 | 60 |
| Refrigerant piping | Connecting port diameter | Gas side | | In | 7/8" | 7/8" | 1-1/8" |
| | | Liquid side | | In | 1/2" | 1/2" | 1/2" |
| | | Balance side | | In | 3/8" | 3/8" | 3/8" |
| | Connecting method | Gas side | | | Brazing | | |
| | | Liquid side | | | Flare | | |
| | | Balance side | | | Flare | | |
| System interconnection wiring | | | (Up to 3280 ft) | | Shielded wire AWG16 x 2 cores | | |
| | | | (Up to 6560 ft) | | Shielded wire AWG14 x 2 cores | | |
| Max. No. of connected indoor units | | | | | 12 | 16 | 19 |
| Max. external static pressure | | | | In WG | 0.20 | 0.20 | 0.20 |
| Operation temperature range | | Cooling | | FDB | 23 to 109 | | |
| | | Heating | | FWB | 5 to 60 | | |
| Sound pressure level | | Cooling | | dB(A) | 56 | 60 | 62 |
| | | Heating | | dB(A) | 57 | 62 | 63 |

Note
(*) Under measuring
(*1) Rated conditions
Cooling : Indoor air temperature 80 °F DryBulb/67 °F WetBulb, Outdoor air temperature 95 °F DryBulb
Heating : Indoor air temperature 70 °F DryBulb, Outdoor air temperature 47 °F DryBulb/43 °F WetBulb
Equivalent piping length : 25ft , Hight difference : 0ft
Conditions based on Alternate Test Method guidelines provided by the U.S. Department of Energy(DOE)
(*2) The source voltage must not fluctuate more than ±10%.
(*3) Value for only outdoor unit
(*4) The amount does not consider extra piping length. Refrigerant must be added on site in accordance with the actual piping length.
(*5) Select wire size base on the larger value of MCA.
MCA : Minimum Circuit Amps (minimum circuit Amps required for power supply design.)
(*6) MOCP : Maximum Overcurrent Protection(Amps)

## Single unit (System with ducted indoor units)

| Outdoor unit model name | | | | MMY- | MAP0724HT9UL | MAP0964HT9UL | MAP1144HT9UL |
|---|---|---|---|---|---|---|---|
| Cooling Capacity | | | (*1) | kBtu/h | 72 | 96 | 110 |
| Heating Capacity | | | (*1) | kBtu/h | 81 | 104 | 126 |
| Electrical charastaristics (*1) | Power supply | | (*2) | | 230V (208/230V) 3phase 60Hz | | |
| | Cooling | Power consumption | (*3) | kW | 5.90 | 8.82 | 9.54 |
| | | EER | | Btu/W | 12.2 | 11.6 | 11.5 |
| | Heating | Power consumption | (*3) | kW | 6.50 | 8.87 | 10.73 |
| | | COP | | W/W | 3.46 | 3.44 | 3.44 |
| | Starting Current | | | A | Soft Start | | |
| Dimension | Unit | Height | | in | 72.8 | 72.8 | 72.8 |
| | | Width | | in | 39.0 | 47.6 | 47.6 |
| | | Depth | | in | 30.7 | 30.7 | 30.7 |
| | Packing | Height | | in | 76.3 | 76.3 | 76.3 |
| | | Width | | in | 41.8 | 50.5 | 50.5 |
| | | Depth | | in | 32.6 | 32.6 | 32.6 |
| Total Weight | Unit | | | lb | 546 | 742 | 742 |
| | Packed unit | | | lb | 579 | 779 | 779 |
| Colour | | | | | Silky shade (Munsell 1Y8.5/0.5) | | |
| Compressor | | Type | | | Hermetic twin rotary compressor | | |
| | | Motor output | | kW | 2.3 x 2 | 2.1 x 3 | 2.5 x 3 |
| Fan unit | | Fan | | | Propeller fan | | |
| | | Motor output | | kW | 1.0 | 1.0 | 1.0 |
| | | Air volume | | cfm | 5,800 | 6,600 | 7,060 |
| Refrigerant | | | | | R410A | | |
| | Charged refrigerant amount | | (*4) | lb | 25.4 | 25.4 | 25.4 |
| Heat exchanger | | | | | Finned tube | | |
| High-pressure switch | | | | psi | OFF:420 ON:540 | | |
| Protective devices | | | | | High-pressure switch / High-pressure sensor / Low-pressure sensor / Fusible plug<br>PC board fuse / Inverter overload protector | | |
| Electrical specifications | Unit | MCA | (*5) | A | 36 | 50 | 52 |
| | | MOCP | (*6) | A | 40 | 60 | 60 |
| Refrigerant piping | Connecting port diameter | Gas side | | In | 7/8" | 7/8" | 1-1/8" |
| | | Liquid side | | In | 1/2" | 1/2" | 1/2" |
| | | Balance side | | In | 3/8" | 3/8" | 3/8" |
| | Connecting method | Gas side | | | Brazing | | |
| | | Liquid side | | | Flare | | |
| | | Balance side | | | Flare | | |
| System interconnection wiring | | | (Up to 3280 ft) | | Shielded wire AWG16 x 2 cores | | |
| | | | (Up to 6560 ft) | | Shielded wire AWG14 x 2 cores | | |
| Max. No. of connected indoor units | | | | | 12 | 16 | 19 |
| Max. external static pressure | | | | In WG | 0.20 | 0.20 | 0.20 |
| Operation temperature range | | Cooling | | FDB | 23 to 109 | | |
| | | Heating | | FWB | 5 to 60 | | |
| Sound pressure level | | Cooling | | dB(A) | 56 | 60 | 62 |
| | | Heating | | dB(A) | 57 | 62 | 63 |

Note
(*) Under measuring
(*1) Rated conditions
Cooling : Indoor air temperature 80 °F DryBulb/67 °F WetBulb, Outdoor air temperature 95 °F DryBulb
Heating : Indoor air temperature 70 °F DryBulb, Outdoor air temperature 47 °F DryBulb/43 °F WetBulb
Equivalent piping length : 25ft , Hight difference : 0ft
Conditions based on Alternate Test Method guidelines provided by the U.S. Department of Energy(DOE)
(*2) The source voltage must not fluctuate more than ±10%.
(*3) Value for only outdoor unit
(*4) The amount does not consider extra piping length. Refrigerant must be added on site in accordance with the actual piping length.
(*5) Select wire size base on the larger value of MCA.
MCA : Minimum Circuit Amps (minimum circuit Amps required for power supply design.)
(*6) MOCP : Maximum Overcurrent Protection(Amps)

## Combination unit (System with Non-ducted indoor units)

| Outdoor unit set model name | | | | MMY- | AP1444HT9UL | | AP1684HT9UL | | AP1924HT9UL | | AP2284HT9UL | |
|---|---|---|---|---|---|---|---|---|---|---|---|---|
| Outdoor unit model name | | | | MMY-MAP | 0724HT9UL | 0724HT9UL | 0964HT9UL | 0724HT9UL | 0964HT9UL | 0964HT9UL | 1144HT9UL | 1144HT9UL |
| Cooling Capacity | | | (*1) | kBtu/h | 136 | | 168 | | 192 | | 226 | |
| Heating Capacity | | | (*1) | kBtu/h | 156 | | 189 | | 212 | | 246 | |
| Electrical charastaristics (*1) | Power supply | | (*2) | | 230V(208/230V) 3phase 60Hz | | | | | | | |
| | Cooling | Power consumption | (*3) | kW | 11.87 | | 15.48 | | 17.82 | | 20.87 | |
| | | EER | | Btu/W | 11.4 | | 10.9 | | 10.8 | | 10.8 | |
| | Heating | Power consumption | (*3) | kW | 13.58 | | 17.10 | | 19.12 | | 20.75 | |
| | | COP | | W/W | 3.36 | | 3.24 | | 3.25 | | 3.47 | |
| | Starting Current | | | A | Soft Start | | | | | | | |
| Dimension | Unit | Height | | In | 72.8 | 72.8 | 72.8 | 72.8 | 72.8 | 72.8 | 72.8 | 72.8 |
| | | Width | | In | 39.0 | 39.0 | 47.6 | 39.0 | 47.6 | 47.6 | 47.6 | 47.6 |
| | | Depth | | In | 30.7 | 30.7 | 30.7 | 30.7 | 30.7 | 30.7 | 30.7 | 30.7 |
| | Packing | Height | | In | 76.3 | 76.3 | 76.3 | 76.3 | 76.3 | 76.3 | 76.3 | 76.3 |
| | | Width | | In | 41.8 | 41.8 | 50.5 | 41.8 | 50.5 | 50.5 | 50.5 | 50.5 |
| | | Depth | | In | 32.6 | 32.6 | 32.6 | 32.6 | 32.6 | 32.6 | 32.6 | 32.6 |
| Total Weight | Unit | | | lb | 546 | 546 | 742 | 546 | 742 | 742 | 742 | 742 |
| | Packed unit | | | lb | 579 | 579 | 779 | 579 | 779 | 779 | 779 | 779 |
| Colour | | | | | Silky shade (Munsell 1Y8.5/0.5) | | | | | | | |
| Compressor | | Type | | | Hermetic twin rotary compressor | | | | | | | |
| | | Motor output | | kW | 2.3 x 2 | 2.3 x 2 | 2.1 x 3 | 2.3 x 2 | 2.1 x 3 | 2.1 x 3 | 2.5 x 3 | 2.5 x 3 |
| Fan unit | | Fan | | | Propeller fan | | | | | | | |
| | | Motor output | | kW | 1.0 | 1.0 | 1.0 | 1.0 | 1.0 | 1.0 | 1.0 | 1.0 |
| | | Air volume | | cfm | 5,800 | 5,800 | 6,600 | 5,800 | 6,600 | 6,600 | 7,060 | 7,060 |
| Refrigerant | | | | | R410A | | | | | | | |
| | Charged refrigerant amount | | (*4) | lb | 25.4 | 25.4 | 25.4 | 25.4 | 25.4 | 25.4 | 25.4 | 25.4 |
| Heat exchanger | | | | | Finned tube | | | | | | | |
| High-pressure switch | | | | psi | OFF:420 ON:540 | | | | | | | |
| Protective devices | | | | | High-pressure switch / High-pressure sensor / Low-pressure sensor / Fusible plug<br>PC board fuse / Inverter overload protector | | | | | | | |
| Electrical specifications | Unit | MCA | (*5) | A | 36 | 36 | 50 | 36 | 50 | 50 | 52 | 52 |
| | | MOCP | (*6) | A | 40 | 40 | 60 | 40 | 60 | 60 | 60 | 60 |
| Refrigerant piping | Connecting port diameter | Gas side | | In | 1-1/8" | | 1-1/8" | | 1-1/8" | | 1-3/8" | |
| | | Liquid side | | In | 5/8" | | 5/8" | | 5/8" | | 3/4" | |
| | | Balance side | | In | 3/8" | | 3/8" | | 3/8" | | 3/8" | |
| | Connecting method | Gas side | | | Brazing | | | | | | | |
| | | Liquid side | | | Flare | | | | | | | |
| | | Balance side | | | Flare | | | | | | | |
| System interconnection wiring | | | (Up to 3280 ft) | | Shielded wire AWG 16 x 2 cores | | | | | | | |
| | | | (Up to 6560 ft) | | Shielded wire AWG 14 x 2 cores | | | | | | | |
| Max. No. of connected indoor units | | | | | 24 | | 28 | | 32 | | 38 | |
| Max. external static pressure | | | | In WG | 0.20 | 0.20 | 0.20 | 0.20 | 0.20 | 0.20 | 0.20 | 0.20 |
| Operation temperature range | | Cooling | | FDB | 23 to 109 | | | | | | | |
| | | Heating | | FWB | 5 to 60 | | | | | | | |
| Sound pressure level | | Cooling | | dB(A) | 59 | | 61.5 | | 63 | | 65 | |
| | | Heating | | dB(A) | 60 | | 63.5 | | 65 | | 66 | |

Note
(*) Under measuring
(*1) Rated conditions
Cooling : Indoor air temperature 80 °F DryBulb/67 °F WetBulb, Outdoor air temperature 95 °F DryBulb
Heating : Indoor air temperature 70 °F DryBulb, Outdoor air temperature 47 °F DryBulb/43 °F WetBulb
Equivalent piping length : 25ft , Hight difference : 0ft
Conditions based on Alternate Test Method guidelines provided by the U.S. Department of Energy(DOE)
(*2) The source voltage must not fluctuate more than ±10%.
(*3) Value for only outdoor unit
(*4) The amount does not consider extra piping length. Refrigerant must be added on site in accordance with the actual piping length.
(*5) Select wire size base on the larger value of MCA.
MCA : Minimum Circuit Amps (minimum circuit Amps required for power supply design.)
(*6) MOCP : Maximum Overcurrent Protection(Amps)

## Combination unit (System with ducted indoor units)

| Outdoor unit set model name | | | | MMY- | AP1444HT9UL | | AP1684HT9UL | | AP1924HT9UL | | AP2284HT9UL | |
|---|---|---|---|---|---|---|---|---|---|---|---|---|
| Outdoor unit model name | | | | MMY-MAP | 0724HT9UL | 0724HT9UL | 0964HT9UL | 0724HT9UL | 0964HT9UL | 0964HT9UL | 1144HT9UL | 1144HT9UL |
| Cooling Capacity | | | (*1) | kBtu/h | 134 | | 168 | | 192 | | 198 | |
| Heating Capacity | | | (*1) | kBtu/h | 162 | | 185 | | 200 | | 214 | |
| Electrical charastaristics (*1) | Power supply | | (*2) | | 230V(208/230V) 3phase 60Hz | | | | | | | |
| | Cooling | Power consumption | (*3) | kW | 11.73 | | 14.97 | | 17.39 | | 17.95 | |
| | | EER | | Btu/W | 11.4 | | 11.2 | | 11.0 | | 11.0 | |
| | Heating | Power consumption | (*3) | kW | 14.37 | | 16.22 | | 17.59 | | 18.87 | |
| | | COP | | W/W | 3.30 | | 3.34 | | 3.33 | | 3.32 | |
| | Starting Current | | | A | Soft Start | | | | | | | |
| Dimension | Unit | Height | | In | 72.8 | 72.8 | 72.8 | 72.8 | 72.8 | 72.8 | 72.8 | 72.8 |
| | | Width | | In | 39.0 | 39.0 | 47.6 | 39.0 | 47.6 | 47.6 | 47.6 | 47.6 |
| | | Depth | | In | 30.7 | 30.7 | 30.7 | 30.7 | 30.7 | 30.7 | 30.7 | 30.7 |
| | Packing | Height | | In | 76.3 | 76.3 | 76.3 | 76.3 | 76.3 | 76.3 | 76.3 | 76.3 |
| | | Width | | In | 41.8 | 41.8 | 50.5 | 41.8 | 50.5 | 50.5 | 50.5 | 50.5 |
| | | Depth | | In | 32.6 | 32.6 | 32.6 | 32.6 | 32.6 | 32.6 | 32.6 | 32.6 |
| Total Weight | Unit | | | lb | 546 | 546 | 742 | 546 | 742 | 742 | 742 | 742 |
| | Packed unit | | | lb | 579 | 579 | 779 | 579 | 779 | 779 | 779 | 779 |
| Colour | | | | | Silky shade (Munsell 1Y8.5/0.5) | | | | | | | |
| Compressor | | Type | | | Hermetic twin rotary compressor | | | | | | | |
| | | Motor output | | kW | 2.3 x 2 | 2.3 x 2 | 2.1 x 3 | 2.3 x 2 | 2.1 x 3 | 2.1 x 3 | 2.5 x 3 | 2.5 x 3 |
| Fan unit | | Fan | | | Propeller fan | | | | | | | |
| | | Motor output | | kW | 1.0 | 1.0 | 1.0 | 1.0 | 1.0 | 1.0 | 1.0 | 1.0 |
| | | Air volume | | cfm | 5,800 | 5,800 | 6,600 | 5,800 | 6,600 | 6,600 | 7,060 | 7,060 |
| Refrigerant | | | | | R410A | | | | | | | |
| | Charged refrigerant amount | | (*4) | lb | 25.4 | 25.4 | 25.4 | 25.4 | 25.4 | 25.4 | 25.4 | 25.4 |
| Heat exchanger | | | | | Finned tube | | | | | | | |
| High-pressure switch | | | | psi | OFF:420 ON:540 | | | | | | | |
| Protective devices | | | | | High-pressure switch / High-pressure sensor / Low-pressure sensor / Fusible plug<br>PC board fuse / Inverter overload protector | | | | | | | |
| Electrical specifications | Unit | MCA | (*5) | A | 36 | 36 | 50 | 36 | 50 | 50 | 52 | 52 |
| | | MOCP | (*6) | A | 40 | 40 | 60 | 40 | 60 | 60 | 60 | 60 |
| Refrigerant piping | Connecting port diameter | Gas side | | In | 1-1/8" | | 1-1/8" | | 1-1/8" | | 1-3/8" | |
| | | Liquid side | | In | 5/8" | | 5/8" | | 5/8" | | 3/4" | |
| | | Balance side | | In | 3/8" | | 3/8" | | 3/8" | | 3/8" | |
| | Connecting method | Gas side | | | Brazing | | | | | | | |
| | | Liquid side | | | Flare | | | | | | | |
| | | Balance side | | | Flare | | | | | | | |
| System interconnection wiring | | | (Up to 3280 ft) | | Shielded wire AWG 16 x 2 cores | | | | | | | |
| | | | (Up to 6560 ft) | | Shielded wire AWG 14 x 2 cores | | | | | | | |
| Max. No. of connected indoor units | | | | | 24 | | 28 | | 32 | | 38 | |
| Max. external static pressure | | | | In WG | 0.20 | 0.20 | 0.20 | 0.20 | 0.20 | 0.20 | 0.20 | 0.20 |
| Operation temperature range | | Cooling | | FDB | 23 to 109 | | | | | | | |
| | | Heating | | FWB | 5 to 60 | | | | | | | |
| Sound pressure level | | Cooling | | dB(A) | 59 | | 61.5 | | 63 | | 65 | |
| | | Heating | | dB(A) | 60 | | 63.5 | | 65 | | 66 | |

Note
(*) Under measuring
(*1) Rated conditions
Cooling : Indoor air temperature 80 °F DryBulb/67 °F WetBulb, Outdoor air temperature 95 °F DryBulb
Heating : Indoor air temperature 70 °F DryBulb, Outdoor air temperature 47 °F DryBulb/43 °F WetBulb
Equivalent piping length : 25ft , Hight difference : 0ft
Conditions based on Alternate Test Method guidelines provided by the U.S. Department of Energy(DOE)
(*2) The source voltage must not fluctuate more than ±10%.
(*3) Value for only outdoor unit
(*4) The amount does not consider extra piping length. Refrigerant must be added on site in accordance with the actual piping length.
(*5) Select wire size base on the larger value of MCA.
MCA : Minimum Circuit Amps (minimum circuit Amps required for power supply design.)
(*6) MOCP : Maximum Overcurrent Protection(Amps)

## 6-1-1-2. 460V model

### Single unit (System with Non-ducted indoor units)

| Outdoor unit model name | | | | MMY- | MAP0724HT6UL | MAP0964HT6UL | MAP1144HT6UL |
|---|---|---|---|---|---|---|---|
| Cooling Capacity | | | (*1) | kBtu/h | 72 | 96 | 112 |
| Heating Capacity | | | (*1) | kBtu/h | 81 | 108 | 130 |
| Electrical charastaristics (*1) | Power supply | | (*2) | | 460V 3phase 60Hz | | |
| | Cooling | Power consumption | (*3) | kW | 6.44 | 8.57 | 9.97 |
| | | EER | | Btu/W | 11.2 | 11.2 | 11.2 |
| | Heating | Power consumption | (*3) | kW | 6.69 | 9.44 | 11.16 |
| | | COP | | W/W | 3.55 | 3.35 | 3.41 |
| | Starting Current | | | A | Soft Start | | |
| Dimension | Unit | Height | | in | 72.8 | 72.8 | 72.8 |
| | | Width | | in | 39.0 | 47.6 | 47.6 |
| | | Depth | | in | 30.7 | 30.7 | 30.7 |
| | Packing | Height | | in | 76.3 | 76.3 | 76.3 |
| | | Width | | in | 41.8 | 50.5 | 50.5 |
| | | Depth | | in | 32.6 | 32.6 | 32.6 |
| Total Weight | Unit | | | lb | 621 | 817 | 817 |
| | Packed unit | | | lb | 654 | 855 | 855 |
| Colour | | | | | Silky shade (Munsell 1Y8.5/0.5) | | |
| Compressor | | Type | | | Hermetic twin rotary compressor | | |
| | | Motor output | | kW | 2.3 x 2 | 2.1 x 3 | 2.5 x 3 |
| Fan unit | | Fan | | | Propeller fan | | |
| | | Motor output | | kW | 1.0 | 1.0 | 1.0 |
| | | Air volume | | cfm | 5,800 | 6,600 | 7,060 |
| Refrigerant | | | | | R410A | | |
| | Charged refrigerant amount | | (*4) | lb | 25.4 | 25.4 | 25.4 |
| Heat exchanger | | | | | Finned tube | | |
| High-pressure switch | | | | psi | OFF:420 ON:540 | | |
| Protective devices | | | | | High-pressure switch / High-pressure sensor / Low-pressure sensor / Fusible plug<br>PC board fuse / Inverter overload protector | | |
| Electrical specifications | Unit | MCA | (*5) | A | 18 | 23 | 24 |
| | | MOCP | (*6) | A | 20 | 25 | 25 |
| Refrigerant piping | Connecting port diameter | Gas side | | In | 7/8" | 7/8" | 1-1/8" |
| | | Liquid side | | In | 1/2" | 1/2" | 1/2" |
| | | Balance side | | In | 3/8" | 3/8" | 3/8" |
| | Connecting method | Gas side | | | Brazing | | |
| | | Liquid side | | | Flare | | |
| | | Balance side | | | Flare | | |
| System interconnection wiring | | | (Up to 3280 ft) | | Shielded wire AWG16 x 2 cores | | |
| | | | (Up to 6560 ft) | | Shielded wire AWG14 x 2 cores | | |
| Max. No. of connected indoor units | | | | | 12 | 16 | 19 |
| Max. external static pressure | | | | In WG | 0.20 | 0.20 | 0.20 |
| Operation temperature range | | Cooling | | FDB | 23 to 109 | | |
| | | Heating | | FWB | 5 to 60 | | |
| Sound pressure level | | Cooling | | dB(A) | 56 | 60 | 62 |
| | | Heating | | dB(A) | 57 | 62 | 63 |

Note
(*) Under measuring
(*1) Rated conditions
Cooling : Indoor air temperature 80 °F DryBulb/67 °F WetBulb, Outdoor air temperature 95 °F DryBulb
Heating : Indoor air temperature 70 °F DryBulb, Outdoor air temperature 47 °F DryBulb/43 °F WetBulb
Equivalent piping length : 25ft , Hight difference : 0ft
Conditions based on Alternate Test Method guidelines provided by the U.S. Department of Energy(DOE)
(*2) The source voltage must not fluctuate more than ±10%.
(*3) Value for only outdoor unit
(*4) The amount does not consider extra piping length. Refrigerant must be added on site in accordance with the actual piping length.
(*5) Select wire size base on the larger value of MCA.
MCA : Minimum Circuit Amps (minimum circuit Amps required for power supply design.)
(*6) MOCP : Maximum Overcurrent Protection(Amps)

## Single unit (System with ducted indoor units)

| Outdoor unit model name | | | | MMY- | MAP0724HT6UL | MAP0964HT6UL | MAP1144HT6UL |
|---|---|---|---|---|---|---|---|
| Cooling Capacity | | | (*1) | kBtu/h | 72 | 96 | 110 |
| Heating Capacity | | | (*1) | kBtu/h | 81 | 104 | 126 |
| Electrical charastaristics (*1) | Power supply | | (*2) | | 460V 3phase 60Hz | | |
| | Cooling | Power consumption | (*3) | kW | 5.90 | 8.82 | 9.54 |
| | | EER | | Btu/W | 12.2 | 11.6 | 11.5 |
| | Heating | Power consumption | (*3) | kW | 6.50 | 8.87 | 10.73 |
| | | COP | | W/W | 3.46 | 3.44 | 3.44 |
| | Starting Current | | | A | Soft Start | | |
| Dimension | Unit | Height | | in | 72.8 | 72.8 | 72.8 |
| | | Width | | in | 39.0 | 47.6 | 47.6 |
| | | Depth | | in | 30.7 | 30.7 | 30.7 |
| | Packing | Height | | in | 76.3 | 76.3 | 76.3 |
| | | Width | | in | 41.8 | 50.5 | 50.5 |
| | | Depth | | in | 32.6 | 32.6 | 32.6 |
| Total Weight | Unit | | | lb | 621 | 817 | 817 |
| | Packed unit | | | lb | 654 | 855 | 855 |
| Colour | | | | | Silky shade (Munsell 1Y8.5/0.5) | | |
| Compressor | | Type | | | Hermetic twin rotary compressor | | |
| | | Motor output | | kW | 2.3 x 2 | 2.1 x 3 | 2.5 x 3 |
| Fan unit | | Fan | | | Propeller fan | | |
| | | Motor output | | kW | 1.0 | 1.0 | 1.0 |
| | | Air volume | | cfm | 5,800 | 6,600 | 7,060 |
| Refrigerant | | | | | R410A | | |
| | Charged refrigerant amount | | (*4) | lb | 25.4 | 25.4 | 25.4 |
| Heat exchanger | | | | | Finned tube | | |
| High-pressure switch | | | | psi | OFF:420 ON:540 | | |
| Protective devices | | | | | High-pressure switch / High-pressure sensor / Low-pressure sensor / Fusible plug<br>PC board fuse / Inverter overload protector | | |
| Electrical specifications | Unit | MCA | (*5) | A | 18 | 23 | 24 |
| | | MOCP | (*6) | A | 20 | 25 | 25 |
| Refrigerant piping | Connecting port diameter | Gas side | | In | 7/8" | 7/8" | 1-1/8" |
| | | Liquid side | | In | 1/2" | 1/2" | 1/2" |
| | | Balance side | | In | 3/8" | 3/8" | 3/8" |
| | Connecting method | Gas side | | | Brazing | | |
| | | Liquid side | | | Flare | | |
| | | Balance side | | | Flare | | |
| System interconnection wiring | | | (Up to 3280 ft) | | Shielded wire AWG16 x 2 cores | | |
| | | | (Up to 6560 ft) | | Shielded wire AWG14 x 2 cores | | |
| Max. No. of connected indoor units | | | | | 12 | 16 | 19 |
| Max. external static pressure | | | | In WG | 0.20 | 0.20 | 0.20 |
| Operation temperature range | | Cooling | | FDB | 23 to 109 | | |
| | | Heating | | FWB | 5 to 60 | | |
| Sound pressure level | | Cooling | | dB(A) | 56 | 60 | 62 |
| | | Heating | | dB(A) | 57 | 62 | 63 |

Note
(*) Under measuring
(*1) Rated conditions
Cooling : Indoor air temperature 80 °F DryBulb/67 °F WetBulb, Outdoor air temperature 95 °F DryBulb
Heating : Indoor air temperature 70 °F DryBulb, Outdoor air temperature 47 °F DryBulb/43 °F WetBulb
Equivalent piping length : 25ft , Hight difference : 0ft
Conditions based on Alternate Test Method guidelines provided by the U.S. Department of Energy(DOE)
(*2) The source voltage must not fluctuate more than ±10%.
(*3) Value for only outdoor unit
(*4) The amount does not consider extra piping length. Refrigerant must be added on site in accordance with the actual piping length.
(*5) Select wire size base on the larger value of MCA.
MCA : Minimum Circuit Amps (minimum circuit Amps required for power supply design.)
(*6) MOCP : Maximum Overcurrent Protection(Amps)

## Combination unit (System with Non-ducted indoor units)

| Outdoor unit set model name | | | | MMY- | AP1444HT6UL | | AP1684HT6UL | | AP1924HT6UL | | AP2284HT6UL | |
|---|---|---|---|---|---|---|---|---|---|---|---|---|
| Outdoor unit model name | | | | MMY-MAP | 0724HT6UL | 0724HT6UL | 0964HT6UL | 0724HT6UL | 0964HT6UL | 0964HT6UL | 1144HT6UL | 1144HT6UL |
| Cooling Capacity | | | (*1) | kBtu/h | 136 | | 168 | | 192 | | 226 | |
| Heating Capacity | | | (*1) | kBtu/h | 156 | | 189 | | 212 | | 246 | |
| Electrical charastaristics (*1) | Power supply | | (*2) | | 460V 3phase 60Hz | | | | | | | |
| | Cooling | Power consumption | (*3) | kW | 11.87 | | 15.48 | | 17.82 | | 20.87 | |
| | | EER | | Btu/W | 11.4 | | 10.9 | | 10.8 | | 10.8 | |
| | Heating | Power consumption | (*3) | kW | 13.58 | | 17.10 | | 19.12 | | 20.75 | |
| | | COP | | W/W | 3.36 | | 3.24 | | 3.25 | | 3.47 | |
| | Starting Current | | | A | Soft Start | | | | | | | |
| Dimension | Unit | Height | | In | 72.8 | 72.8 | 72.8 | 72.8 | 72.8 | 72.8 | 72.8 | 72.8 |
| | | Width | | In | 39.0 | 39.0 | 47.6 | 39.0 | 47.6 | 47.6 | 47.6 | 47.6 |
| | | Depth | | In | 30.7 | 30.7 | 30.7 | 30.7 | 30.7 | 30.7 | 30.7 | 30.7 |
| | Packing | Height | | In | 76.3 | 76.3 | 76.3 | 76.3 | 76.3 | 76.3 | 76.3 | 76.3 |
| | | Width | | In | 41.8 | 41.8 | 50.5 | 41.8 | 50.5 | 50.5 | 50.5 | 50.5 |
| | | Depth | | In | 32.6 | 32.6 | 32.6 | 32.6 | 32.6 | 32.6 | 32.6 | 32.6 |
| Total Weight | Unit | | | lb | 621 | 621 | 817 | 621 | 817 | 817 | 817 | 817 |
| | Packed unit | | | lb | 654 | 654 | 855 | 654 | 855 | 855 | 855 | 855 |
| Colour | | | | | Silky shade (Munsell 1Y8.5/0.5) | | | | | | | |
| Compressor | | Type | | | Hermetic twin rotary compressor | | | | | | | |
| | | Motor output | | kW | 2.3 x 2 | 2.3 x 2 | 2.1 x 3 | 2.3 x 2 | 2.1 x 3 | 2.1 x 3 | 2.5 x 3 | 2.5 x 3 |
| Fan unit | | Fan | | | Propeller fan | | | | | | | |
| | | Motor output | | kW | 1.0 | 1.0 | 1.0 | 1.0 | 1.0 | 1.0 | 1.0 | 1.0 |
| | | Air volume | | cfm | 5,800 | 5,800 | 6,600 | 5,800 | 6,600 | 6,600 | 7,060 | 7,060 |
| Refrigerant | | | | | R410A | | | | | | | |
| | Charged refrigerant amount | | (*4) | lb | 25.4 | 25.4 | 25.4 | 25.4 | 25.4 | 25.4 | 25.4 | 25.4 |
| Heat exchanger | | | | | Finned tube | | | | | | | |
| High-pressure switch | | | | psi | OFF:420 ON:540 | | | | | | | |
| Protective devices | | | | | High-pressure switch / High-pressure sensor / Low-pressure sensor / Fusible plug<br>PC board fuse / Inverter overload protector | | | | | | | |
| Electrical specifications | Unit | MCA | (*5) | A | 18 | 18 | 23 | 18 | 23 | 23 | 24 | 24 |
| | | MOCP | (*6) | A | 20 | 20 | 25 | 20 | 25 | 25 | 25 | 25 |
| Refrigerant piping | Connecting port diameter | Gas side | | In | 1-1/8" | | 1-1/8" | | 1-1/8" | | 1-3/8" | |
| | | Liquid side | | In | 5/8" | | 5/8" | | 5/8" | | 3/4" | |
| | | Balance side | | In | 3/8" | | 3/8" | | 3/8" | | 3/8" | |
| | Connecting method | Gas side | | | Brazing | | | | | | | |
| | | Liquid side | | | Flare | | | | | | | |
| | | Balance side | | | Flare | | | | | | | |
| System interconnection wiring | | | (Up to 3280 ft) | | Shielded wire AWG 16 x 2 cores | | | | | | | |
| | | | (Up to 6560 ft) | | Shielded wire AWG 14 x 2 cores | | | | | | | |
| Max. No. of connected indoor units | | | | | 24 | | 28 | | 32 | | 38 | |
| Max. external static pressure | | | | In WG | 0.20 | 0.20 | 0.20 | 0.20 | 0.20 | 0.20 | 0.20 | 0.20 |
| Operation temperature range | | Cooling | | FDB | 23 to 109 | | | | | | | |
| | | Heating | | FWB | 5 to 60 | | | | | | | |
| Sound pressure level | | Cooling | | dB(A) | 59 | | 61.5 | | 63 | | 65 | |
| | | Heating | | dB(A) | 60 | | 63.5 | | 65 | | 66 | |

Note
(*) Under measuring
(*1) Rated conditions
Cooling : Indoor air temperature 80 °F DryBulb/67 °F WetBulb, Outdoor air temperature 95 °F DryBulb
Heating : Indoor air temperature 70 °F DryBulb, Outdoor air temperature 47 °F DryBulb/43 °F WetBulb
Equivalent piping length : 25ft , Hight difference : 0ft
Conditions based on Alternate Test Method guidelines provided by the U.S. Department of Energy(DOE)
(*2) The source voltage must not fluctuate more than ±10%.
(*3) Value for only outdoor unit
(*4) The amount does not consider extra piping length. Refrigerant must be added on site in accordance with the actual piping length.
(*5) Select wire size base on the larger value of MCA.
MCA : Minimum Circuit Amps (minimum circuit Amps required for power supply design.)
(*6) MOCP : Maximum Overcurrent Protection(Amps)

## Combination unit (System with ducted indoor units)

| Outdoor unit set model name | | | | MMY- | AP1444HT6UL | | AP1684HT6UL | | AP1924HT6UL | | AP2284HT6UL | |
|---|---|---|---|---|---|---|---|---|---|---|---|---|
| Outdoor unit model name | | | | MMY-MAP | 0724HT6UL | 0724HT6UL | 0964HT6UL | 0724HT6UL | 0964HT6UL | 0964HT6UL | 1144HT6UL | 1144HT6UL |
| Cooling Capacity | | | (*1) | kBtu/h | 134 | | 168 | | 192 | | 198 | |
| Heating Capacity | | | (*1) | kBtu/h | 162 | | 185 | | 200 | | 214 | |
| Electrical charastaristics (*1) | Power supply | | (*2) | | 460V 3phase 60Hz | | | | | | | |
| | Cooling | Power consumption | (*3) | kW | 11.73 | | 14.97 | | 17.39 | | 17.95 | |
| | | EER | | Btu/W | 11.4 | | 11.2 | | 11.0 | | 11.0 | |
| | Heating | Power consumption | (*3) | kW | 14.37 | | 16.22 | | 17.59 | | 18.87 | |
| | | COP | | W/W | 3.30 | | 3.34 | | 3.33 | | 3.32 | |
| | Starting Current | | | A | Soft Start | | | | | | | |
| Dimension | Unit | Height | | In | 72.8 | 72.8 | 72.8 | 72.8 | 72.8 | 72.8 | 72.8 | 72.8 |
| | | Width | | In | 39.0 | 39.0 | 47.6 | 39.0 | 47.6 | 47.6 | 47.6 | 47.6 |
| | | Depth | | In | 30.7 | 30.7 | 30.7 | 30.7 | 30.7 | 30.7 | 30.7 | 30.7 |
| | Packing | Height | | In | 76.3 | 76.3 | 76.3 | 76.3 | 76.3 | 76.3 | 76.3 | 76.3 |
| | | Width | | In | 41.8 | 41.8 | 50.5 | 41.8 | 50.5 | 50.5 | 50.5 | 50.5 |
| | | Depth | | In | 32.6 | 32.6 | 32.6 | 32.6 | 32.6 | 32.6 | 32.6 | 32.6 |
| Total Weight | Unit | | | lb | 621 | 621 | 817 | 621 | 817 | 817 | 817 | 817 |
| | Packed unit | | | lb | 654 | 654 | 855 | 654 | 855 | 855 | 855 | 855 |
| Colour | | | | | Silky shade (Munsell 1Y8.5/0.5) | | | | | | | |
| Compressor | | Type | | | Hermetic twin rotary compressor | | | | | | | |
| | | Motor output | | kW | 2.3 x 2 | 2.3 x 2 | 2.1 x 3 | 2.3 x 2 | 2.1 x 3 | 2.1 x 3 | 2.5 x 3 | 2.5 x 3 |
| Fan unit | | Fan | | | Propeller fan | | | | | | | |
| | | Motor output | | kW | 1.0 | 1.0 | 1.0 | 1.0 | 1.0 | 1.0 | 1.0 | 1.0 |
| | | Air volume | | cfm | 5,800 | 5,800 | 6,600 | 5,800 | 6,600 | 6,600 | 7,060 | 7,060 |
| Refrigerant | | | | | R410A | | | | | | | |
| | Charged refrigerant amount | | (*4) | lb | 25.4 | 25.4 | 25.4 | 25.4 | 25.4 | 25.4 | 25.4 | 25.4 |
| Heat exchanger | | | | | Finned tube | | | | | | | |
| High-pressure switch | | | | psi | OFF:420 ON:540 | | | | | | | |
| Protective devices | | | | | High-pressure switch / High-pressure sensor / Low-pressure sensor / Fusible plug<br>PC board fuse / Inverter overload protector | | | | | | | |
| Electrical specifications | Unit | MCA | (*5) | A | 18 | 18 | 23 | 18 | 23 | 23 | 24 | 24 |
| | | MOCP | (*6) | A | 20 | 20 | 25 | 20 | 25 | 25 | 25 | 25 |
| Refrigerant piping | Connecting port diameter | Gas side | | In | 1-1/8" | | 1-1/8" | | 1-1/8" | | 1-3/8" | |
| | | Liquid side | | In | 5/8" | | 5/8" | | 5/8" | | 3/4" | |
| | | Balance side | | In | 3/8" | | 3/8" | | 3/8" | | 3/8" | |
| | Connecting method | Gas side | | | Brazing | | | | | | | |
| | | Liquid side | | | Flare | | | | | | | |
| | | Balance side | | | Flare | | | | | | | |
| System interconnection wiring | | | (Up to 3280 ft) | | Shielded wire AWG 16 x 2 cores | | | | | | | |
| | | | (Up to 6560 ft) | | Shielded wire AWG 14 x 2 cores | | | | | | | |
| Max. No. of connected indoor units | | | | | 24 | | 28 | | 32 | | 38 | |
| Max. external static pressure | | | | In WG | 0.20 | 0.20 | 0.20 | 0.20 | 0.20 | 0.20 | 0.20 | 0.20 |
| Operation temperature range | | Cooling | | FDB | 23 to 109 | | | | | | | |
| | | Heating | | FWB | 5 to 60 | | | | | | | |
| Sound pressure level | | Cooling | | dB(A) | 59 | | 61.5 | | 63 | | 65 | |
| | | Heating | | dB(A) | 60 | | 63.5 | | 65 | | 66 | |

Note
(*) Under measuring
(*1) Rated conditions
Cooling : Indoor air temperature 80 °F DryBulb/67 °F WetBulb, Outdoor air temperature 95 °F DryBulb
Heating : Indoor air temperature 70 °F DryBulb, Outdoor air temperature 47 °F DryBulb/43 °F WetBulb
Equivalent piping length : 25ft , Hight difference : 0ft
Conditions based on Alternate Test Method guidelines provided by the U.S. Department of Energy(DOE)
(*2) The source voltage must not fluctuate more than ±10%.
(*3) Value for only outdoor unit
(*4) The amount does not consider extra piping length. Refrigerant must be added on site in accordance with the actual piping length.
(*5) Select wire size base on the larger value of MCA.
MCA : Minimum Circuit Amps (minimum circuit Amps required for power supply design.)
(*6) MOCP : Maximum Overcurrent Protection(Amps)

## 6-1-2. Dimensional drawing

### 6-1-2-1. Single unit

**Model: MMY-MAP0724HT9UL, MAP0724HT6UL**

(Unit:in(mm))

(Note)

1. If there is an obstacle at the upper side of the outdoor unit, set the top end of the outdoor unit 78.7in(2000mm) apart from the obstacle.
2. Limit the height of the obstacle surrounding the outdoor unit to 31.5in(800mm) or less from the bottom end of the outdoor unit.
3. Draw out the pipe procured locally to the front of the outdoor unit horizontally,and keep 19.7in(500mm) or more between the outdoor unit and traversing pipe if placing pipe transversely.
4. Dimensional drawing of corrosion protection and corrosion heavy protection model is the same as that of standard model.

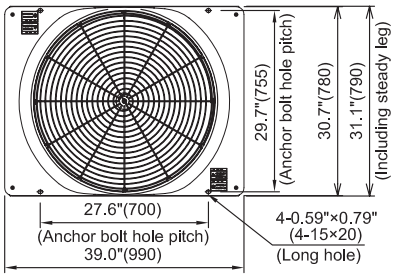


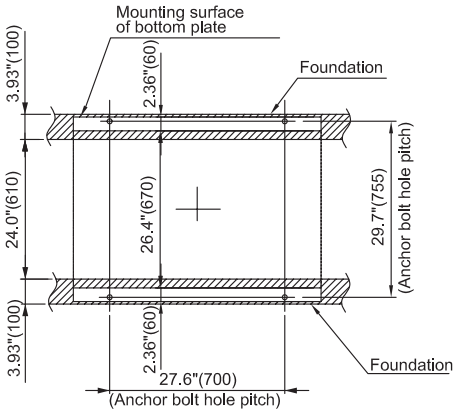


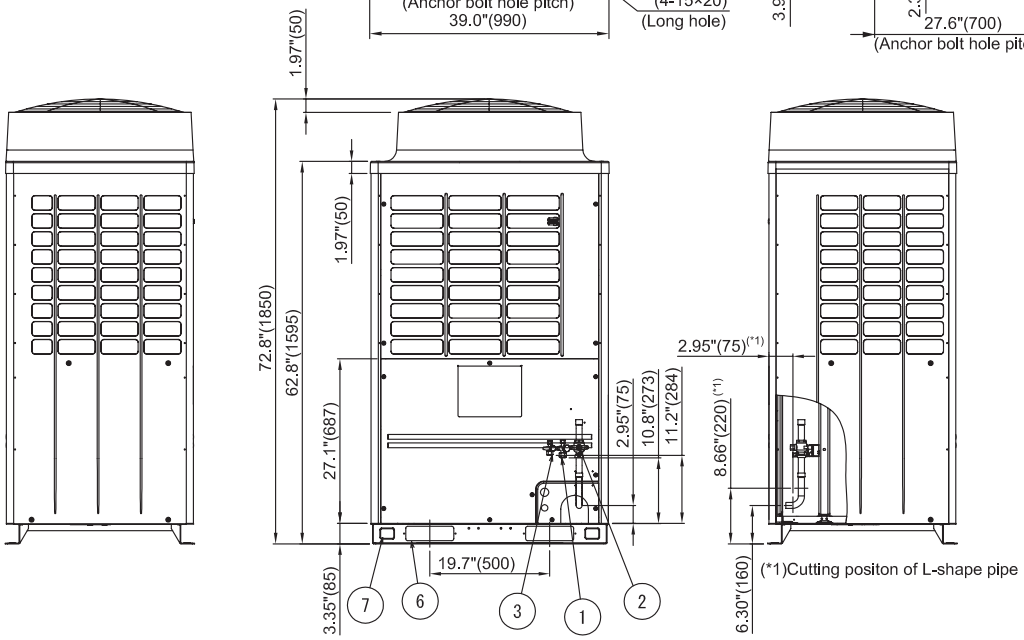


(*1)Cutting positon of L-shape pipe

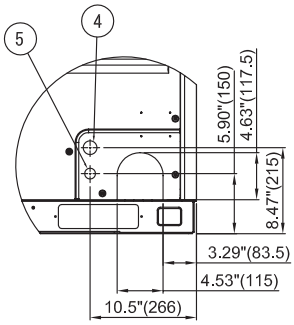


Holes for piping/wiring

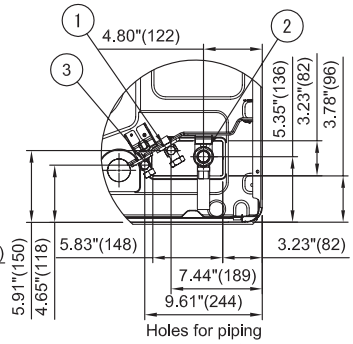


Holes for piping
(Plan view)

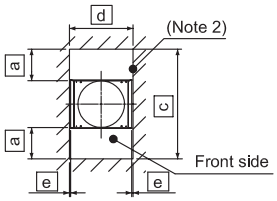


Space required for service

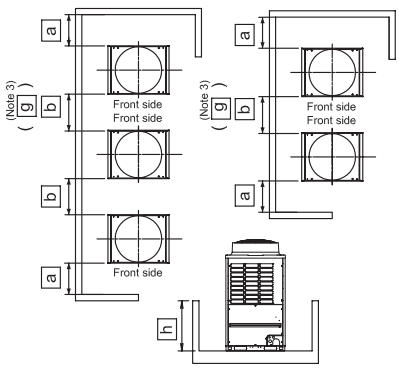


| No | Parts name | Remarks |
|---|---|---|
| ① | Liquid pipe connection port | Φ1/2"(12.7) |
| ② | Gas pipe connection port | Φ8/9"(22.2) |
| ③ | Balance pipe connection port | Φ3/8"(9.5) |
| ④ | Knockout hole for power wiring | Φ1.36"(34.5) |
| ⑤ | Knockout hole for control wiring | Φ1.06"(27) |
| ⑥ | Rectangular hole (for freight handling) | 4-2.36"×7.87"(4-60X200) |
| ⑦ | Square hole (for hanging) | 4-1.58"×2.17"(4-40X55) |

| | |
|---|---|
| a | ≥19.7"(500) |
| b | ≥ 23.6"(600) |
| c | ≥ 70.1"(1780) |
| d | ≥ 39.8"(1010) |
| e | ≥ 0.39"(10) |
| g | ≥ 39.4"(1000) |
| h | ≤ 31.5"(800) |

## Model: MMY-MAP0964HT9UL, MAP0964HT6UL
## MMY-MAP1144HT9UL, MAP1144HT6UL

(Unit:in(mm))

(Note)

1. If there is an obstacle at the upper side of the outdoor unit, set the top end of the outdoor unit 78.7in(2000mm) apart from the obstacle.
2. Limit the height of the obstacle surrounding the outdoor unit to 31.5in(800mm) or less from the bottom end of the outdoor unit.
3. Draw out the pipe procured locally to the front of the outdoor unit horizontally,and keep 19.7in(500mm) or more between the outdoor unit and traversing pipe if placing pipe transversely.
4. Dimensional drawing of corrosion protection and corrosion heavy protection model is the same as that of standard model.

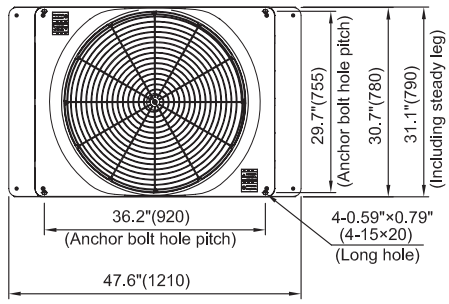


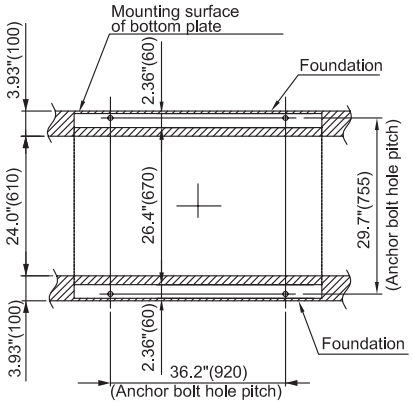


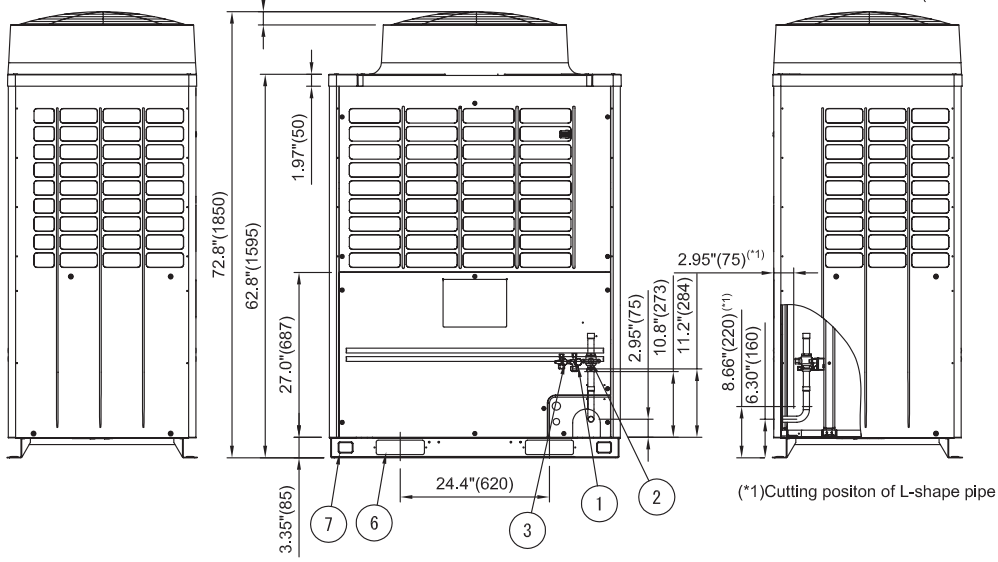


(*1)Cutting positon of L-shape pipe

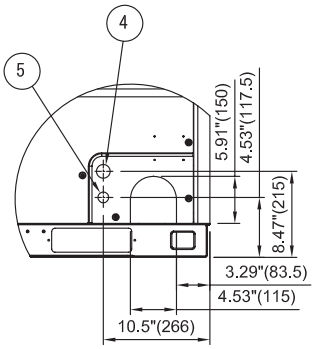


Holes for piping/wiring

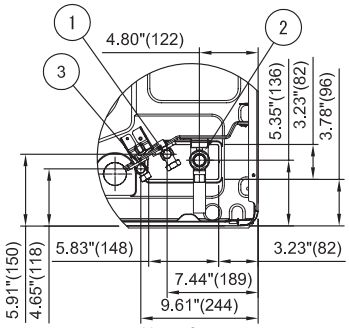


Holes for piping
(Plan view)

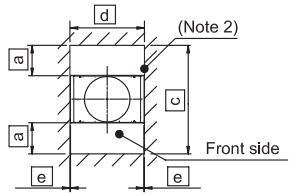


Space required for service

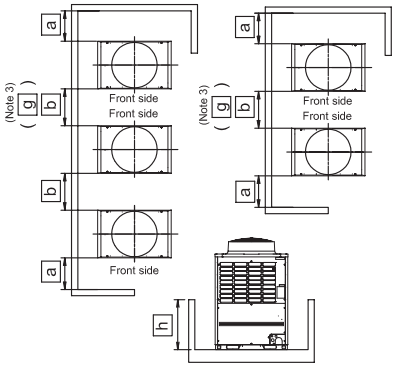


| No | Parts name | Remarks |
|---|---|---|
| ① | Liquid pipe connection port | Φ1/2"(15.9) |
| ② | Gas pipe connection port | Φ7/8"(28.6) |
| ③ | Balance pipe connection port | Φ3/8"(9.5) |
| ④ | Knockout hole for power wiring | Φ1.36"(34.5) |
| ⑤ | Knockout hole for control wiring | Φ1.06"(27) |
| ⑥ | Rectangular hole (for freight handling) | 4-2.36"×7.87"(4-60X200) |
| ⑦ | Square hole (for hanging) | 4-1.57"×2.17"(4-40X55) |

| | |
|---|---|
| a | ≥ 19.7"(500) |
| b | ≥ 23.6"(600) |
| c | ≥ 70.1"(1780) |
| d | ≥ 48.4"(1230) |
| e | ≥ 0.39"(10) |
| g | ≥ 39.4"(1000) |
| h | ≤ 31.5"(800) |

## 6-1-2-2. Combination

| Model | Outdoor unit | |
|---|---|---|
| | (1) Header unit | (2) Follower unit |
| MMY-AP1444HT9UL | MMY-MAP0724HT9UL | MMY-MAP0724HT9UL |
| MMY-AP1444HT6UL | MMY-MAP0724HT6UL | MMY-MAP0724HT6UL |

Two units connected

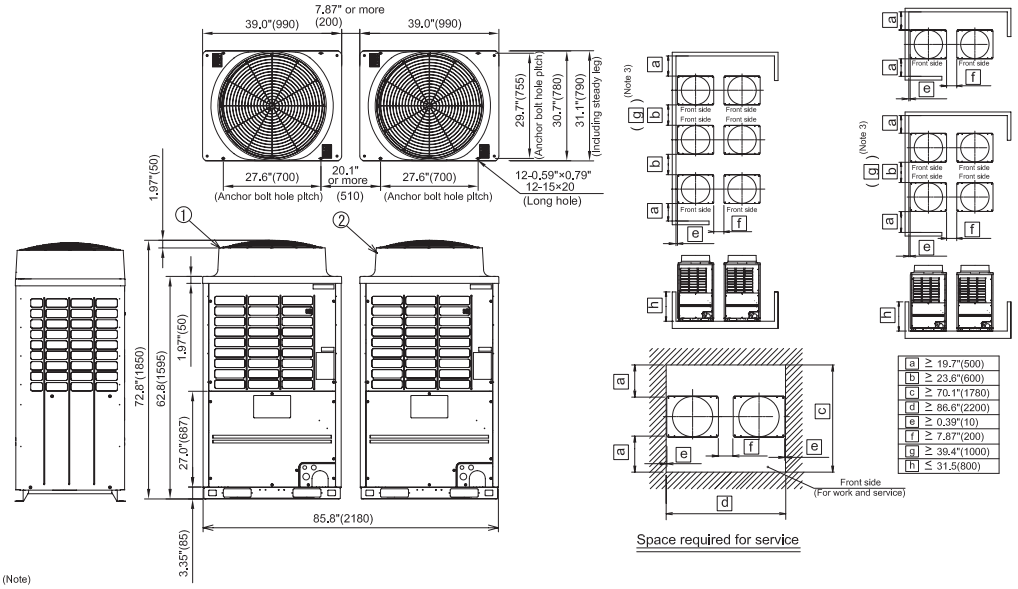


(Note)
1. If there is an obstacle at the upper side of the outdoor unit, set the top end of the outdoor unit 78.7"in(2000mm) apart from the obstacle.
2. Limit the height of the obstacle surrounding the outdoor unit to 31.5"in(800mm) or less from the bottom end of the outdoor unit.
3. Draw out the pipe procured locally to the front of the outdoor unit horizontally,and keep 19.7"in(500mm) or more between the outdoor unit and traversing pipe if placing pipe transversely.
4. Arrange each outdoor unit in order of its capacity.
(Header unit ① ≥ Follower unit ② )
5. Dimensional drawing of corrosion protection and corrosion heavy protection model is the same as that of standard model.

(Unit:in(mm))

| Model | Outdoor unit | |
|---|---|---|
| | (1) Header unit | (2) Follower unit |
| MMY-AP1684HT9UL | MMY-MAP0964HT9UL | MMY-MAP0724HT9UL |
| MMY-AP1684HT6UL | MMY-MAP0964HT6UL | MMY-MAP0724HT6UL |

Two units connected

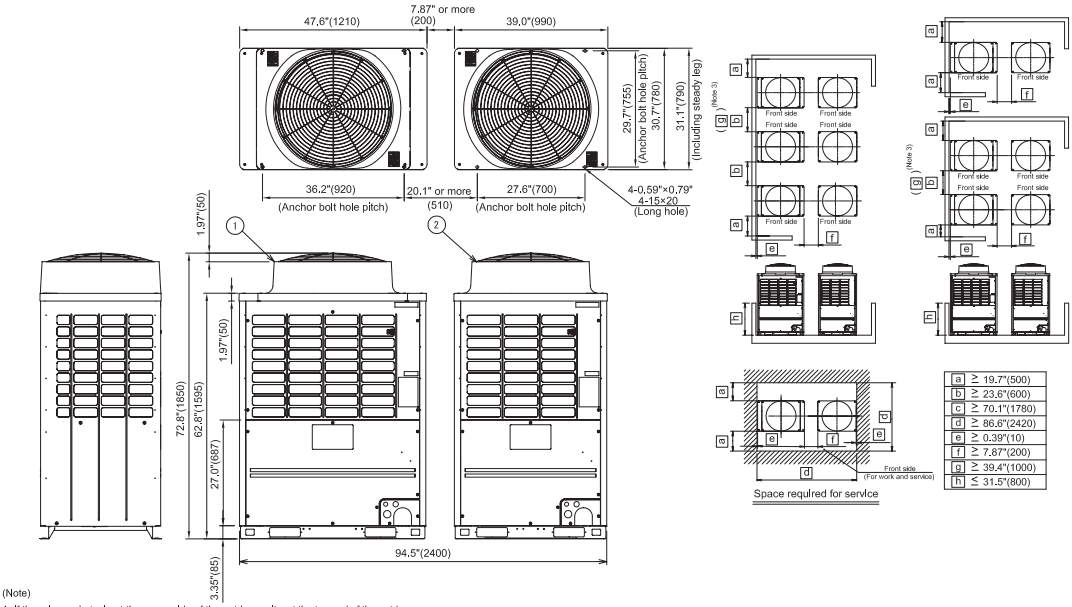


(Note)
1. If there is an obstacle at the upper side of the outdoor unit, set the top end of the outdoor unit 78.7"in(2000mm) apart from the obstacle.
2. Limit the height of the obstacle surrounding the outdoor unit to 31.5"in(800mm) or less from the bottom end of the outdoor unit.
3. Draw out the pipe procured locally to the front of the outdoor unit horizontally,and keep 19.7"in(500mm) or more between the outdoor unit and traversing pipe if placing pipe transversely.
4. Arrange each outdoor unit in order of its capacity.
(Header unit ① ≥ Follower unit ② )
5. Dimensional drawing of corrosion protection and corrosion heavy protection model is the same as that of standard model.

(Unit:in(mm))

| Model | Outdoor unit | |
|---|---|---|
| | (1) Header unit | (2) Follower unit |
| MMY-AP1924HT9UL | MMY-MAP0964HT9UL | MMY-MAP0964HT9UL |
| MMY-AP1924HT6UL | MMY-MAP0964HT6UL | MMY-MAP0964HT6UL |
| MMY-AP2284HT9UL | MMY-MAP1144HT9UL | MMY-MAP1144HT9UL |
| MMY-AP2284HT6UL | MMY-MAP1144HT6UL | MMY-MAP1144HT6UL |

Two units connected

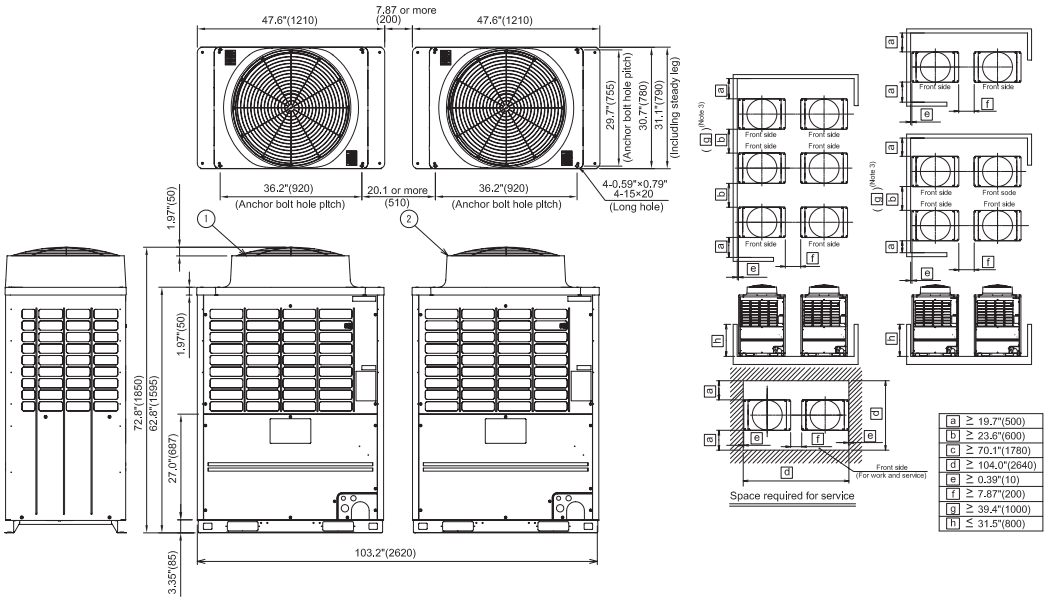


(Note)

1. If there is an obstacle at the upper side of the outdoor unit, set the top end of the outdoor unit 78.7"in(2000mm) apart from the obstacle.
2. Limit the height of the obstacle surrounding the outdoor unit to 31.5"in(800mm) or less from the bottom end of the outdoor unit.
3. Draw out the pipe procured locally to the front of the outdoor unit horizontally,and keep 19.7"in(500mm) or more between the outdoor unit and traversing pipe if placing pipe transversely.
4. Arrange each outdoor unit in order of its capacity.
   (Header unit ① ≥ Follower unit ② )
5. Dimensional drawing of corrosion protection and corrosion heavy protection model is the same as that of standard model.

(Unit:in(mm))

## 6-1-3. Center of Gravity

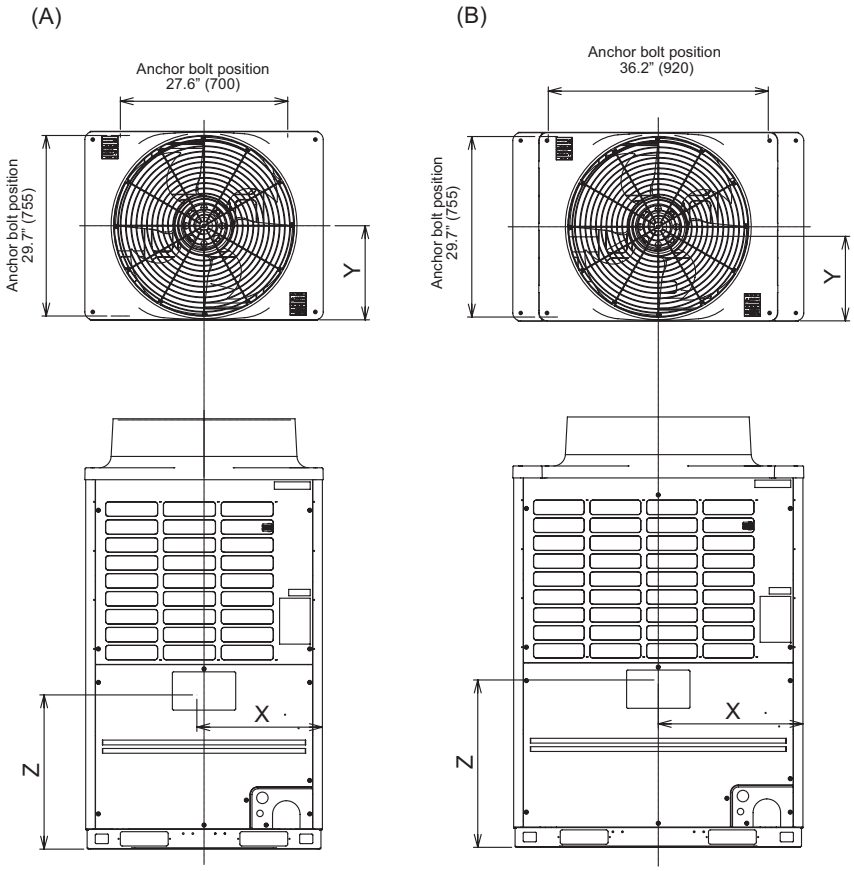


Unit: in (mm)

| No. | Model type | X (in (mm)) | Y (in (mm)) | Z (in (mm)) | Weight (lb (kg)) |
|---|---|---|---|---|---|
| (A) | MAP0724HT9UL | 19.7" (500) | 15.4" (390) | 25.4" (645) | 546 (247) |
| | MAP0724HT6UL | 21.3" (540) | 15.8" (400) | 24.4" (620) | 621 (281) |
| (B) | MAP0964HT9UL | 23.8" (605) | 13.8" (350) | 27.6" (700) | 742 (336) |
| | MAP1144HT9UL | | | | |
| | MAP0964HT6UL | 25.8" (655) | 15.4" (390) | 25.6" (650) | 817 (370) |
| | MAP1144HT6UL | | | | |

## 6-1-4. Sound pressure level data (NC Curve)

### Outdoor unit

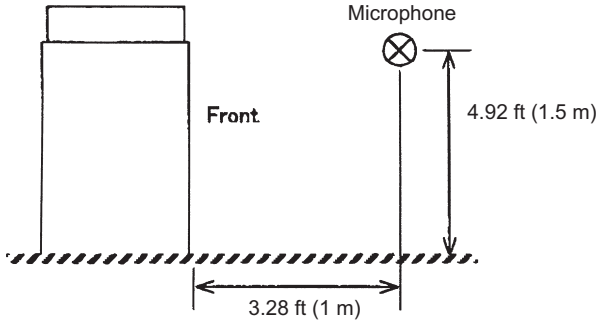


### 1 Single unit

**MMY-MAP0724HT9UL, MAP0724HT6UL**

| Sound pressure level (dB (A)) | Cooling | Heating |
|---|---|---|
| | 56 | 57 |

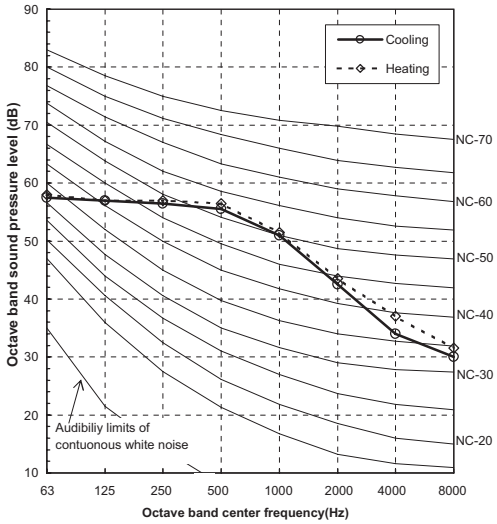


**MMY-MAP0964HT9UL, MAP0964HT6UL**

| Sound pressure level (dB (A)) | Cooling | Heating |
|---|---|---|
| | 60 | 62 |

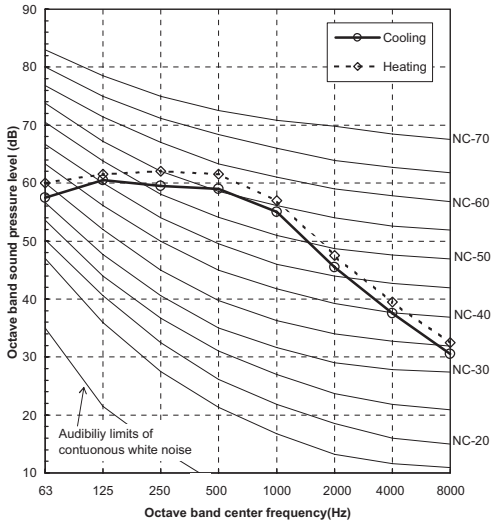


**MMY-MAP1144HT9UL, MAP1144HT6UL**

| Sound pressure level (dB (A)) | Cooling | Heating |
|---|---|---|
| | 62 | 63 |

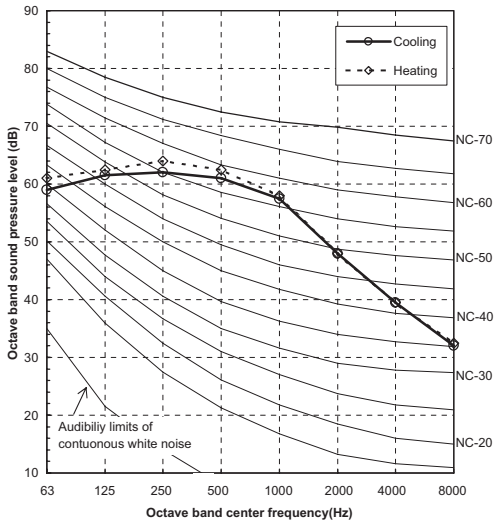

## 2 Combination

**MMY-AP1144HT9UL, AP1144HT6UL**

| Sound pressure level (dB (A)) | Cooling | Heating |
|---|---|---|
| | 59 | 60 |

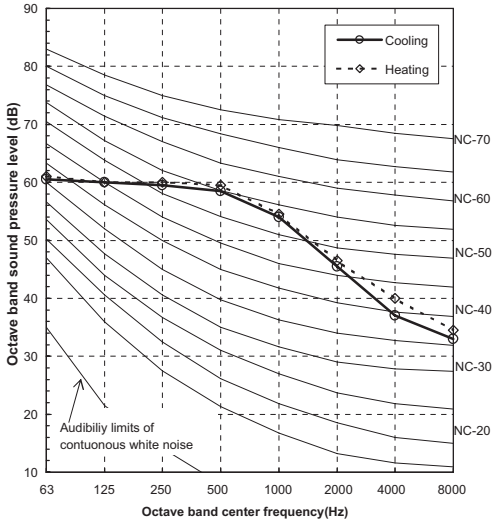


**MMY-AP1684HT9UL, AP1684HT6UL**

| Sound pressure level (dB (A)) | Cooling | Heating |
|---|---|---|
| | 61.5 | 63.5 |

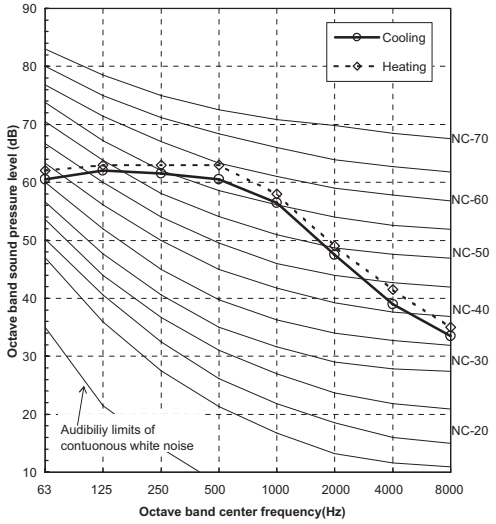


**MMY-AP1924HT9UL, AP1924HT6UL**

| Sound pressure level (dB (A)) | Cooling | Heating |
|---|---|---|
| | 63 | 64 |

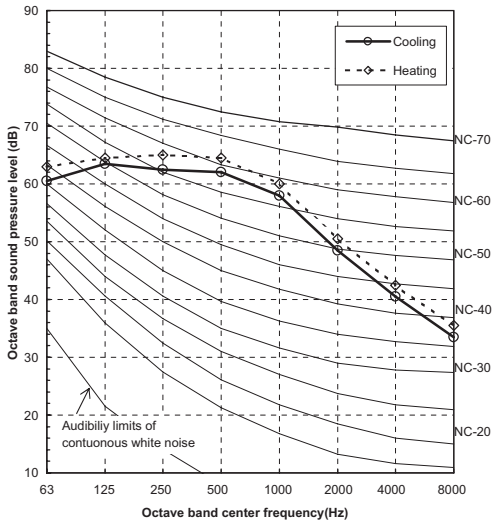


**MMY-AP2284HT9UL, AP2284HT6UL**

| Sound pressure level (dB (A)) | Cooling | Heating |
|---|---|---|
| | 65 | 66 |

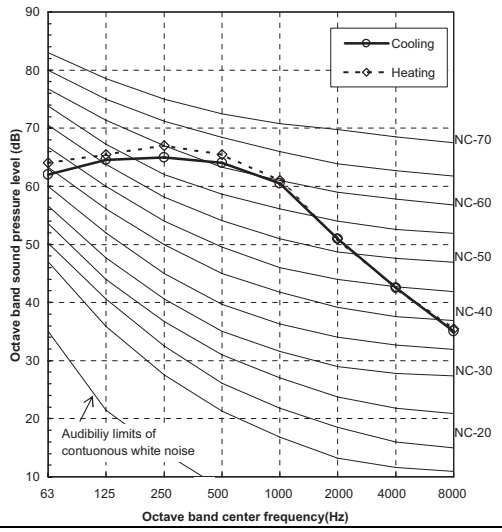

# 6-2. Indoor Unit

### 6-2-1. 4-Way Cassette type

# 4-Way Cassette type

**MMU-AP0182H2UL**
**MMU-AP0212H2UL**
**MMU-AP0242H2UL**
**MMU-AP0302H2UL**
**MMU-AP0362H2UL**
**MMU-AP0422H2UL**

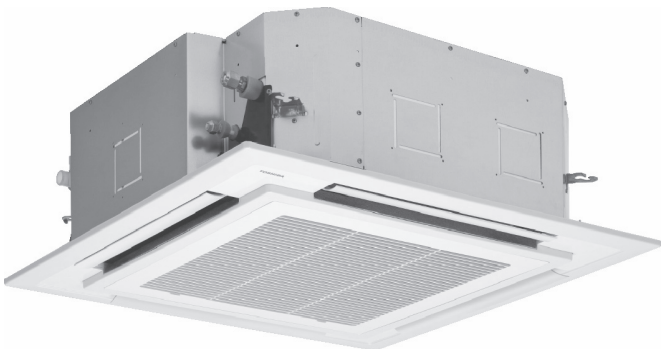

## Contents

1. Specifications
2. Dimensions
3. Wiring diagram
4. Center of Gravity
5. Electrical current characteristics
6. Sensible capacity table
7. Air throw distance chart
8. Sound characteristics (NC-Curve)
9. Fresh air intake (Design guide)
10. Branching duct (Design guide)
11. Accessories

# 1. Specifications

## 4-Way Cassette type

| Model name | | | MMU- | AP0182H2UL | AP0212H2UL | AP0242H2UL | AP0302H2UL | AP0362H2UL | AP0422H2UL |
|---|---|---|---|---|---|---|---|---|---|
| Cooling Capacity | | | kBtu/h | 18 | 21 | 24 | 30 | 36 | 42 |
| Heating Capacity | | | kBtu/h | 20 | 24 | 27 | 34 | 40 | 47.5 |
| Electrical charastaristics | Power supply | | | 230V(208/230V) 1phase 60Hz | | | | | |
| | Power consumption | | kW | 0.026 | 0.036 | 0.036 | 0.043 | 0.088 | 0.112 |
| Appearance | Main unit | | | Zinc hot dipping steel plate Heat-instulating material attached | | | | | |
| | Ceiling panel | Model | | RBC-U31PG(W)-UL | | | | | |
| | | Panel color | | White (2.5GY9.0/0.5) | | | | | |
| Dimension (Ceiling panel)* | Unit | Height | In | 10.1(1.2)* | 10.1(1.2)* | 10.1(1.2)* | 10.1(1.2)* | 12.6(1.2)* | 12.6(1.2)* |
| | | Width | In | 33.1(37.4)* | 33.1(37.4)* | 33.1(37.4)* | 33.1(37.4)* | 33.1(37.4)* | 33.1(37.4)* |
| | | Depth | In | 33.1(37.4)* | 33.1(37.4)* | 33.1(37.4)* | 33.1(37.4)* | 33.1(37.4)* | 33.1(37.4)* |
| | Packing | Height | In | 11.3(3.9)* | 11.3(3.9)* | 11.3(3.9)* | 11.3(3.9)* | 13.8(3.9)* | 13.8(3.9)* |
| | | Width | In | 36.0(39.8)* | 36.0(39.8)* | 36.0(39.8)* | 36.0(39.8)* | 36.0(39.8)* | 36.0(39.8)* |
| | | Depth | In | 37.2(39.8)* | 37.2(39.8)* | 37.2(39.8)* | 37.2(39.8)* | 37.2(39.8)* | 37.2(39.8)* |
| Total weight (Ceiling panel)* | Unit | | lb | 44(10)* | 44(10)* | 44(10)* | 44(10)* | 55(10)* | 55(10)* |
| | Packed unit | | lb | 53(15.5)* | 53(15.5)* | 53(15.5)* | 53(15.5)* | 64(15.5)* | 64(15.5)* |
| Heat exchanger | | | | Finned tube | | | | | |
| Fan unit | Fan | | | Turbo fan | | | | | |
| | Standard air flow(High/Mid/Low) | | cfm | 550/480/440 | 670/540/490 | 670/540/490 | 730/630/510 | 1160/840/630 | 1250/840/670 |
| | Motor | | W | 60 | 60 | 60 | 60 | 150 | 150 |
| Air filter | | | | Standard filter ( Long life filter) | | | | | |
| Connecting pipe | Gas side | | In | 1/2" | 5/8" | 5/8" | 5/8" | 5/8" | 5/8" |
| | Liquid side | | In | 1/4" | 3/8" | 3/8" | 3/8" | 3/8" | 3/8" |
| | Drain port (Nominal dia.) | | In | VP25(Polyvinyl chloride tube: External Dia.1-1/4 Internal Dia.1) | | | | | |
| Sound puressure level (High/Mid/Low) (*1) | | | dB(A) | 35/33/31 | 38/33/31 | 38/33/31 | 41/36.5/34 | 46/40.5/36.5 | 48.5/40.5/37.5 |
| Option parts | Spacer for height adjustment | | | TCB-SP1602UUL | | | | | |
| | Air-discharge direction kit | | | TCB-BC1602UUL | | | | | |
| | Fresh-air chamber | | | TCB-GFC1602UUL | | | | | |
| | Fresh-air inlet box | | | TCB-GB1602UUL | | | | | |
| | Auxiliary frech air flange | | | TCB-FF101URUL | | | | | |

Note

* Figures in parentheses are for ceiling panels.

(*1) The actual values in an external operating environment are generally higher than the indicated values due to the contribution from ambient noise.

## 2. Dimensions

MMU-AP0182H2UL, AP0212H2UL, AP0242H2UL, AP0302H2UL

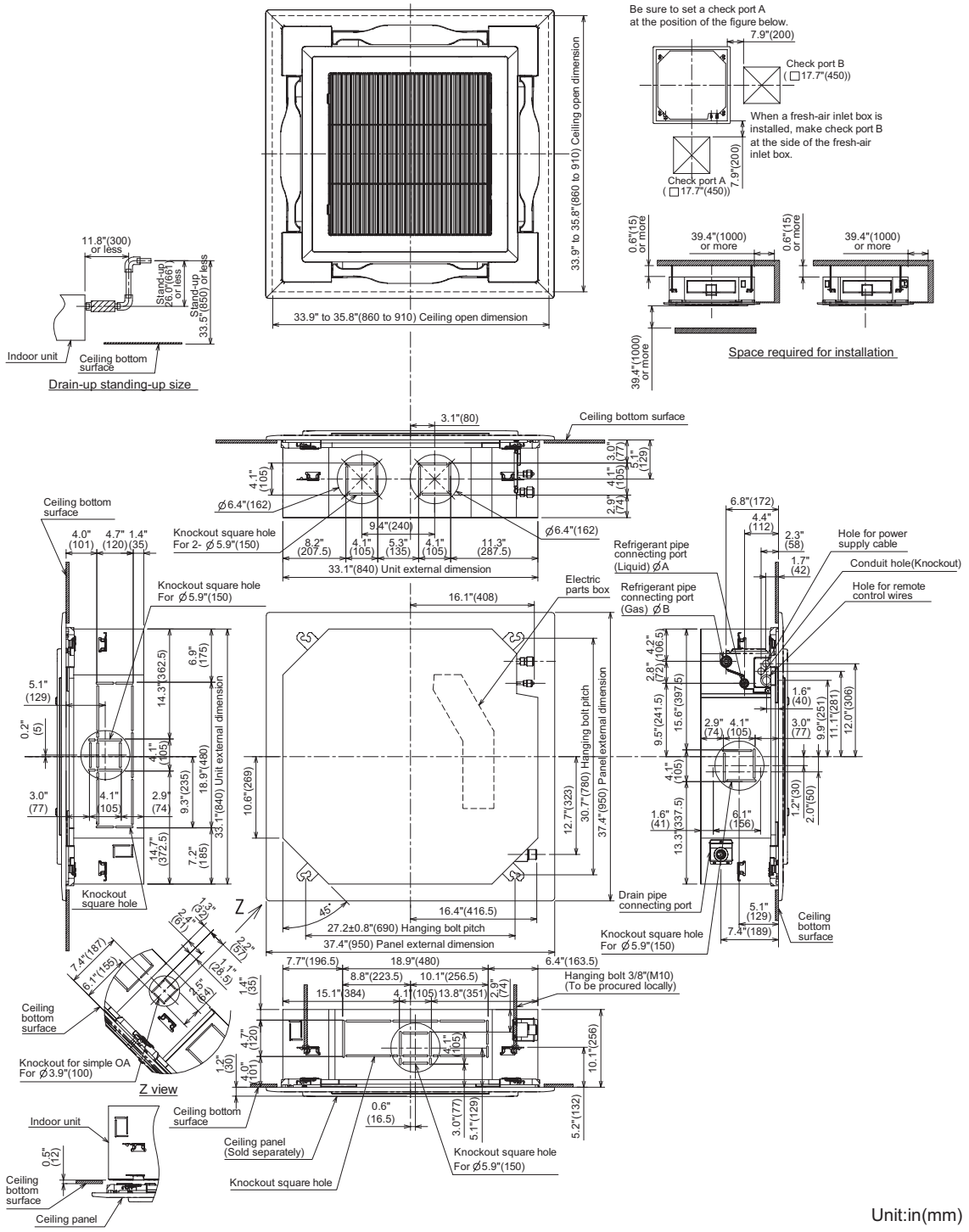


Unit:in(mm)

| Model MMU- | A | B |
|---|---|---|
| AP018 Type | 1/4" (6.4) | 1/2" (12.7) |
| AP021, 024, 030 Type | 3/8" (9.5) | 5/8" (15.9) |

MMU-AP0362H2UL, AP0422H2UL

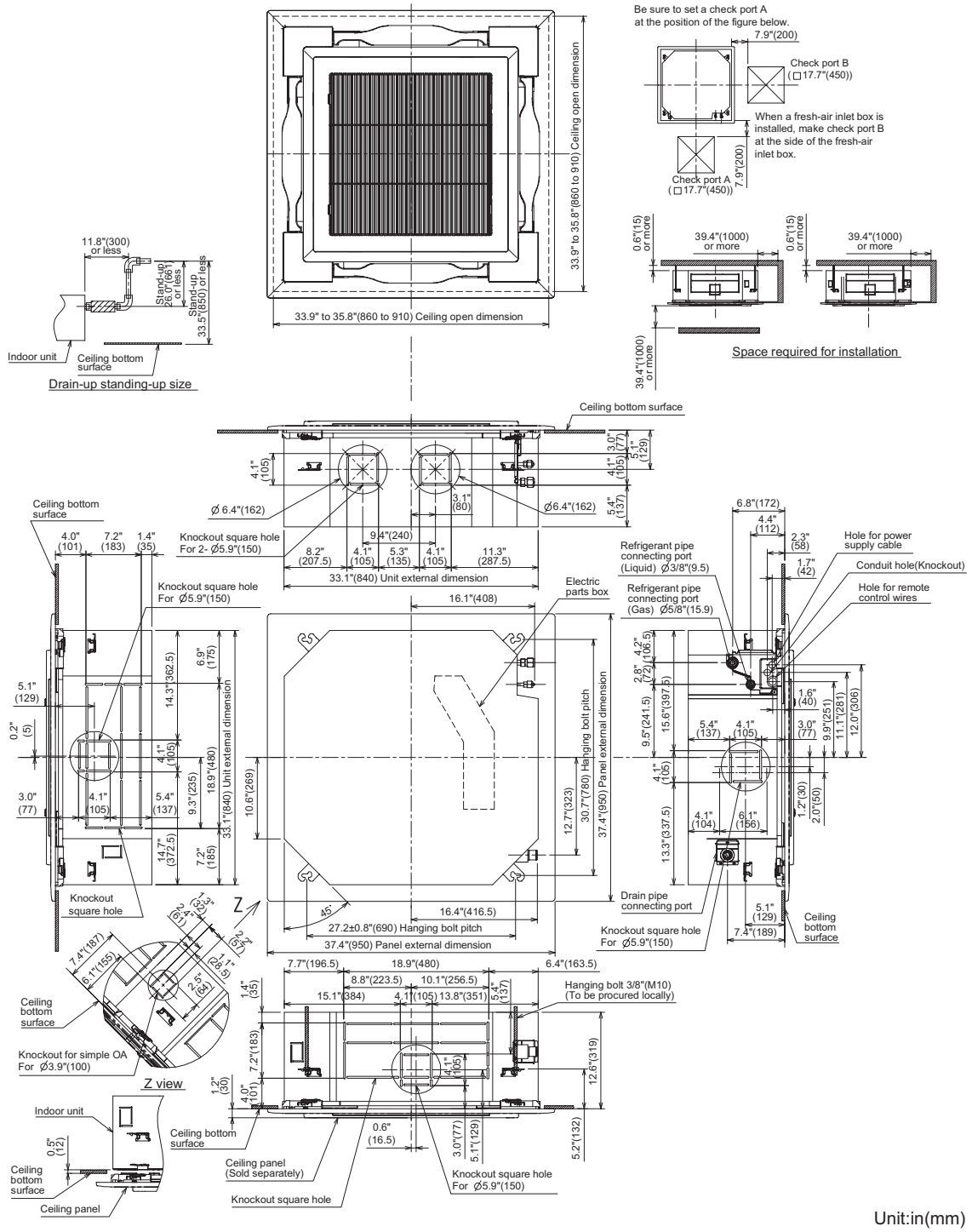

## 3. Wiring diagram

MMU-AP0182H2UL, AP0212H2UL, AP0242H2UL, AP0302H2UL, AP0362H2UL, AP0422H2UL

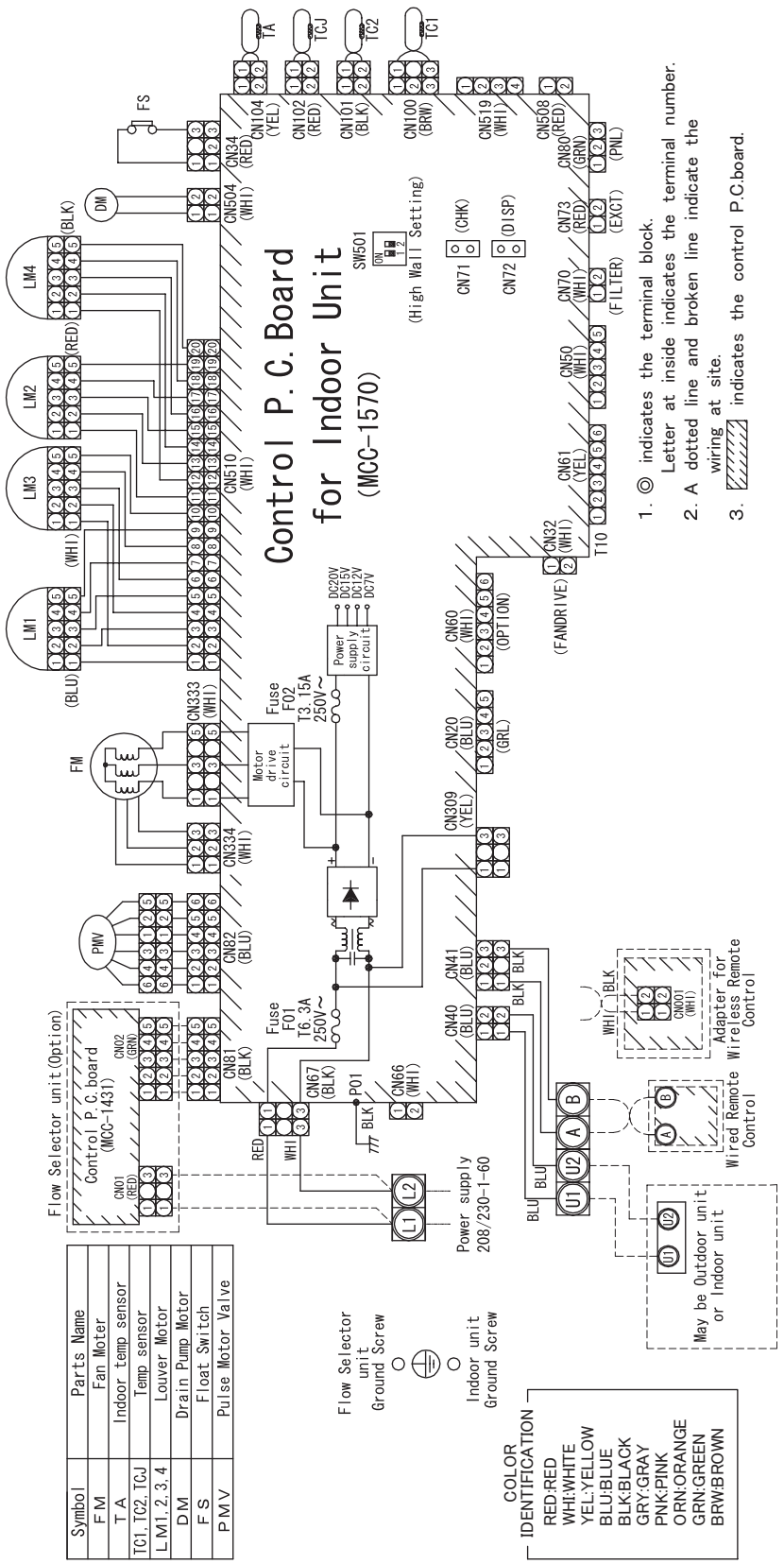

## 4. Center of Gravity

| Model name | X (In) | Y (In) | Z (In) | Total weight | |
|---|---|---|---|---|---|
| | | | | Main unit (lb) | Ceiling panel (lb) |
| MMU-AP0182H2UL | 18.5 | 17.9 | 6.05 | 44 | 10 |
| MMU-AP0212H2UL | | | | | |
| MMU-AP0242H2UL | | | | | |
| MMU-AP0302H2UL | | | | | |
| MMU-AP0362H2UL | | 17.7 | 7.25 | 53 | |
| MMU-AP0422H2UL | | | | | |

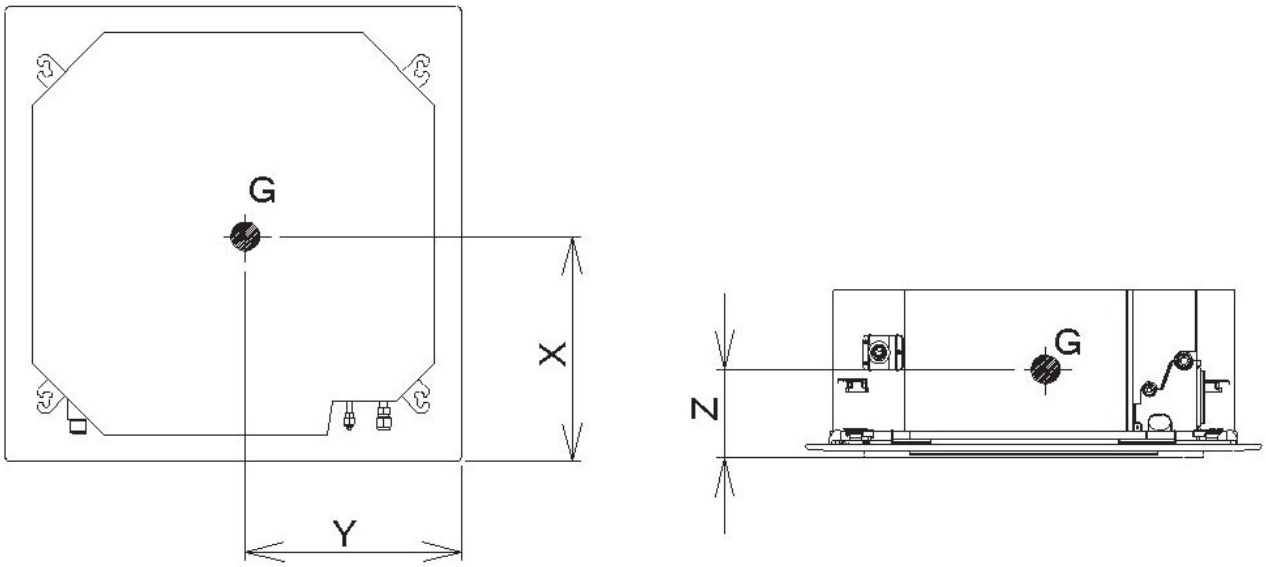


## 5. Electrical current characteristics

| Type | Model | Nominal Voltage (V-Ph-Hz) | Voltage Range (V) | | Power consumption | FLA | MCA | MOCP |
|---|---|---|---|---|---|---|---|---|
| | | | Min | Max | kW | A | A | A |
| 4-Way Cassette type | MMU-AP0182H2UL | 208/230-1-60 | 187 | 253 | 0.026 | 0.6 | 0.8 | 15 |
| | MMU-AP0212H2UL | 208/230-1-60 | 187 | 253 | 0.036 | 0.8 | 1.0 | 15 |
| | MMU-AP0242H2UL | 208/230-1-60 | 187 | 253 | 0.036 | 0.8 | 1.0 | 15 |
| | MMU-AP0302H2UL | 208/230-1-60 | 187 | 253 | 0.043 | 0.8 | 1.0 | 15 |
| | MMU-AP0362H2UL | 208/230-1-60 | 187 | 253 | 0.088 | 1.0 | 1.3 | 15 |
| | MMU-AP0422H2UL | 208/230-1-60 | 187 | 253 | 0.112 | 1.0 | 1.3 | 15 |

MCA : Minimum Circuit Amps
FLA : Full Load Amps
MOCP : Maximum Overcurrent Protection (Amps)

# 6. Sensible capacity table

## 4-Way Cassette type (MMU-AP***2H2UL)

TC: Total capacity [Btu/h] SHC: Sensible capacity [Btu/h]

| unit size | outdoor air temp. °FDB | indoor air temp. | | | | | | | | | | | | | |
|---|---|---|---|---|---|---|---|---|---|---|---|---|---|---|---|
| | | 59°FWB | | 61°FWB | | 64°FWB | | 67°FWB | | 68°FWB | | 72°FWB | | 75°FWB | |
| | | 71°FDB | | 73°FDB | | 77°FDB | | 80°FDB | | 82°FDB | | 86°FDB | | 90°FDB | |
| | | TC | SHC | TC | SHC | TC | SHC | TC | SHC | TC | SHC | TC | SHC | TC | SHC |
| 018 | 50 | 15320 | 11660 | 16030 | 11980 | 17040 | 12470 | 18000 | 12860 | 18310 | 12900 | 19470 | 12730 | 20270 | 12260 |
| | 54 | 15320 | 11660 | 16030 | 11980 | 17040 | 12470 | 18000 | 12860 | 18310 | 12900 | 19470 | 12730 | 20270 | 12260 |
| | 57 | 15320 | 11660 | 16030 | 11980 | 17040 | 12470 | 18000 | 12860 | 18310 | 12900 | 19470 | 12730 | 20270 | 12260 |
| | 61 | 15320 | 11660 | 16030 | 11980 | 17040 | 12470 | 18000 | 12860 | 18310 | 12900 | 19470 | 12730 | 20270 | 12260 |
| | 64 | 15320 | 11660 | 16030 | 11980 | 17040 | 12470 | 18000 | 12860 | 18310 | 12900 | 19470 | 12730 | 20270 | 12260 |
| | 68 | 15320 | 11660 | 16030 | 11980 | 17040 | 12470 | 18000 | 12860 | 18310 | 12900 | 19470 | 12730 | 20270 | 12260 |
| | 70 | 15320 | 11660 | 16030 | 11980 | 17040 | 12470 | 18000 | 12860 | 18310 | 12900 | 19470 | 12730 | 20270 | 12260 |
| | 73 | 15320 | 11660 | 16030 | 11980 | 17040 | 12470 | 18000 | 12860 | 18310 | 12900 | 19470 | 12730 | 20270 | 12260 |
| | 77 | 15320 | 11660 | 16030 | 11980 | 17040 | 12470 | 18000 | 12860 | 18310 | 12900 | 19470 | 12730 | 20270 | 12260 |
| | 81 | 15320 | 11660 | 16030 | 11980 | 17040 | 12470 | 18000 | 12860 | 18310 | 12900 | 19470 | 12730 | 20270 | 12260 |
| | 84 | 15320 | 11660 | 16030 | 11980 | 17040 | 12470 | 18000 | 12860 | 18310 | 12900 | 19470 | 12730 | 20270 | 12260 |
| | 88 | 15320 | 11660 | 16030 | 11980 | 17040 | 12470 | 18000 | 12860 | 18310 | 12900 | 19470 | 12730 | 20270 | 12260 |
| | 91 | 15320 | 11660 | 16030 | 11980 | 17040 | 12470 | 18000 | 12860 | 18310 | 12900 | 19470 | 12730 | 20270 | 12260 |
| | 95 | 15320 | 11660 | 16030 | 11980 | 17040 | 12470 | 18000 | 12860 | 18310 | 12900 | 19470 | 12730 | 20270 | 12260 |
| | 99 | 14880 | 11320 | 15570 | 11630 | 16550 | 12110 | 17480 | 12490 | 17780 | 12530 | 18910 | 12360 | 19680 | 11900 |
| | 102 | 14520 | 11050 | 15200 | 11360 | 16150 | 11820 | 17060 | 12190 | 17360 | 12230 | 18460 | 12070 | 19220 | 11620 |
| 021 | 50 | 17870 | 14150 | 18700 | 14540 | 19880 | 15130 | 21000 | 15610 | 21360 | 15650 | 22710 | 15450 | 23650 | 14880 |
| | 54 | 17870 | 14150 | 18700 | 14540 | 19880 | 15130 | 21000 | 15610 | 21360 | 15650 | 22710 | 15450 | 23650 | 14880 |
| | 57 | 17870 | 14150 | 18700 | 14540 | 19880 | 15130 | 21000 | 15610 | 21360 | 15650 | 22710 | 15450 | 23650 | 14880 |
| | 61 | 17870 | 14150 | 18700 | 14540 | 19880 | 15130 | 21000 | 15610 | 21360 | 15650 | 22710 | 15450 | 23650 | 14880 |
| | 64 | 17870 | 14150 | 18700 | 14540 | 19880 | 15130 | 21000 | 15610 | 21360 | 15650 | 22710 | 15450 | 23650 | 14880 |
| | 68 | 17870 | 14150 | 18700 | 14540 | 19880 | 15130 | 21000 | 15610 | 21360 | 15650 | 22710 | 15450 | 23650 | 14880 |
| | 70 | 17870 | 14150 | 18700 | 14540 | 19880 | 15130 | 21000 | 15610 | 21360 | 15650 | 22710 | 15450 | 23650 | 14880 |
| | 73 | 17870 | 14150 | 18700 | 14540 | 19880 | 15130 | 21000 | 15610 | 21360 | 15650 | 22710 | 15450 | 23650 | 14880 |
| | 77 | 17870 | 14150 | 18700 | 14540 | 19880 | 15130 | 21000 | 15610 | 21360 | 15650 | 22710 | 15450 | 23650 | 14880 |
| | 81 | 17870 | 14150 | 18700 | 14540 | 19880 | 15130 | 21000 | 15610 | 21360 | 15650 | 22710 | 15450 | 23650 | 14880 |
| | 84 | 17870 | 14150 | 18700 | 14540 | 19880 | 15130 | 21000 | 15610 | 21360 | 15650 | 22710 | 15450 | 23650 | 14880 |
| | 88 | 17870 | 14150 | 18700 | 14540 | 19880 | 15130 | 21000 | 15610 | 21360 | 15650 | 22710 | 15450 | 23650 | 14880 |
| | 91 | 17870 | 14150 | 18700 | 14540 | 19880 | 15130 | 21000 | 15610 | 21360 | 15650 | 22710 | 15450 | 23650 | 14880 |
| | 95 | 17870 | 14150 | 18700 | 14540 | 19880 | 15130 | 21000 | 15610 | 21360 | 15650 | 22710 | 15450 | 23650 | 14880 |
| | 99 | 17350 | 13740 | 18160 | 14120 | 19300 | 14690 | 20390 | 15160 | 20740 | 15200 | 22050 | 15000 | 22960 | 14450 |
| | 102 | 16940 | 13410 | 17730 | 13780 | 18850 | 14340 | 19910 | 14800 | 20250 | 14840 | 21530 | 14650 | 22420 | 14110 |
| 024 | 50 | 20430 | 15020 | 21370 | 15430 | 22730 | 16060 | 24000 | 16563 | 24410 | 16610 | 25960 | 16400 | 27020 | 15780 |
| | 54 | 20430 | 15020 | 21370 | 15430 | 22730 | 16060 | 24000 | 16563 | 24410 | 16610 | 25960 | 16400 | 27020 | 15780 |
| | 57 | 20430 | 15020 | 21370 | 15430 | 22730 | 16060 | 24000 | 16563 | 24410 | 16610 | 25960 | 16400 | 27020 | 15780 |
| | 61 | 20430 | 15020 | 21370 | 15430 | 22730 | 16060 | 24000 | 16563 | 24410 | 16610 | 25960 | 16400 | 27020 | 15780 |
| | 64 | 20430 | 15020 | 21370 | 15430 | 22730 | 16060 | 24000 | 16563 | 24410 | 16610 | 25960 | 16400 | 27020 | 15780 |
| | 68 | 20430 | 15020 | 21370 | 15430 | 22730 | 16060 | 24000 | 16563 | 24410 | 16610 | 25960 | 16400 | 27020 | 15780 |
| | 70 | 20430 | 15020 | 21370 | 15430 | 22730 | 16060 | 24000 | 16563 | 24410 | 16610 | 25960 | 16400 | 27020 | 15780 |
| | 73 | 20430 | 15020 | 21370 | 15430 | 22730 | 16060 | 24000 | 16563 | 24410 | 16610 | 25960 | 16400 | 27020 | 15780 |
| | 77 | 20430 | 15020 | 21370 | 15430 | 22730 | 16060 | 24000 | 16563 | 24410 | 16610 | 25960 | 16400 | 27020 | 15780 |
| | 81 | 20430 | 15020 | 21370 | 15430 | 22730 | 16060 | 24000 | 16563 | 24410 | 16610 | 25960 | 16400 | 27020 | 15780 |
| | 84 | 20430 | 15020 | 21370 | 15430 | 22730 | 16060 | 24000 | 16563 | 24410 | 16610 | 25960 | 16400 | 27020 | 15780 |
| | 88 | 20430 | 15020 | 21370 | 15430 | 22730 | 16060 | 24000 | 16563 | 24410 | 16610 | 25960 | 16400 | 27020 | 15780 |
| | 91 | 20430 | 15020 | 21370 | 15430 | 22730 | 16060 | 24000 | 16563 | 24410 | 16610 | 25960 | 16400 | 27020 | 15780 |
| | 95 | 20430 | 15020 | 21370 | 15430 | 22730 | 16060 | 24000 | 16563 | 24410 | 16610 | 25960 | 16400 | 27020 | 15780 |
| | 99 | 19838 | 14584 | 20750 | 14983 | 22071 | 15594 | 23304 | 16083 | 23702 | 16128 | 25207 | 15924 | 26236 | 15322 |
| | 102 | 19368 | 14239 | 20259 | 14628 | 21548 | 15225 | 22752 | 15702 | 23141 | 15746 | 24610 | 15547 | 25615 | 14959 |

## 4-Way Cassette type (MMU-AP***2H2UL)

TC: Total capacity [Btu/h] SHC: Sensible capacity [Btu/h]

| unit size | outdoor air temp. °FDB | indoor air temp. | | | | | | | | | | | | | |
|---|---|---|---|---|---|---|---|---|---|---|---|---|---|---|---|
| | | 59°FWB | | 61°FWB | | 64°FWB | | 67°FWB | | 68°FWB | | 72°FWB | | 75°FWB | |
| | | 71°FDB | | 73°FDB | | 77°FDB | | 80°FDB | | 82°FDB | | 86°FDB | | 90°FDB | |
| | | TC | SHC | TC | SHC | TC | SHC | TC | SHC | TC | SHC | TC | SHC | TC | SHC |
| 030 | 50 | 25530 | 18740 | 26720 | 19260 | 28410 | 20040 | 30000 | 20670 | 30510 | 20720 | 32450 | 20470 | 33780 | 19700 |
| | 54 | 25530 | 18740 | 26720 | 19260 | 28410 | 20040 | 30000 | 20670 | 30510 | 20720 | 32450 | 20470 | 33780 | 19700 |
| | 57 | 25530 | 18740 | 26720 | 19260 | 28410 | 20040 | 30000 | 20670 | 30510 | 20720 | 32450 | 20470 | 33780 | 19700 |
| | 61 | 25530 | 18740 | 26720 | 19260 | 28410 | 20040 | 30000 | 20670 | 30510 | 20720 | 32450 | 20470 | 33780 | 19700 |
| | 64 | 25530 | 18740 | 26720 | 19260 | 28410 | 20040 | 30000 | 20670 | 30510 | 20720 | 32450 | 20470 | 33780 | 19700 |
| | 68 | 25530 | 18740 | 26720 | 19260 | 28410 | 20040 | 30000 | 20670 | 30510 | 20720 | 32450 | 20470 | 33780 | 19700 |
| | 70 | 25530 | 18740 | 26720 | 19260 | 28410 | 20040 | 30000 | 20670 | 30510 | 20720 | 32450 | 20470 | 33780 | 19700 |
| | 73 | 25530 | 18740 | 26720 | 19260 | 28410 | 20040 | 30000 | 20670 | 30510 | 20720 | 32450 | 20470 | 33780 | 19700 |
| | 77 | 25530 | 18740 | 26720 | 19260 | 28410 | 20040 | 30000 | 20670 | 30510 | 20720 | 32450 | 20470 | 33780 | 19700 |
| | 81 | 25530 | 18740 | 26720 | 19260 | 28410 | 20040 | 30000 | 20670 | 30510 | 20720 | 32450 | 20470 | 33780 | 19700 |
| | 84 | 25530 | 18740 | 26720 | 19260 | 28410 | 20040 | 30000 | 20670 | 30510 | 20720 | 32450 | 20470 | 33780 | 19700 |
| | 88 | 25530 | 18740 | 26720 | 19260 | 28410 | 20040 | 30000 | 20670 | 30510 | 20720 | 32450 | 20470 | 33780 | 19700 |
| | 91 | 25530 | 18740 | 26720 | 19260 | 28410 | 20040 | 30000 | 20670 | 30510 | 20720 | 32450 | 20470 | 33780 | 19700 |
| | 95 | 25530 | 18740 | 26720 | 19260 | 28410 | 20040 | 30000 | 20670 | 30510 | 20720 | 32450 | 20470 | 33780 | 19700 |
| | 99 | 24790 | 18200 | 25950 | 18700 | 27590 | 19460 | 29130 | 20070 | 29630 | 20120 | 31510 | 19880 | 32800 | 19130 |
| | 102 | 24200 | 17770 | 25330 | 18260 | 26930 | 19000 | 28440 | 19600 | 28920 | 19640 | 30760 | 19410 | 32020 | 18680 |
| 036 | 50 | 30640 | 22440 | 32060 | 23060 | 34090 | 24000 | 36000 | 24750 | 36620 | 24820 | 38930 | 24500 | 40540 | 23590 |
| | 54 | 30640 | 22440 | 32060 | 23060 | 34090 | 24000 | 36000 | 24750 | 36620 | 24820 | 38930 | 24500 | 40540 | 23590 |
| | 57 | 30640 | 22440 | 32060 | 23060 | 34090 | 24000 | 36000 | 24750 | 36620 | 24820 | 38930 | 24500 | 40540 | 23590 |
| | 61 | 30640 | 22440 | 32060 | 23060 | 34090 | 24000 | 36000 | 24750 | 36620 | 24820 | 38930 | 24500 | 40540 | 23590 |
| | 64 | 30640 | 22440 | 32060 | 23060 | 34090 | 24000 | 36000 | 24750 | 36620 | 24820 | 38930 | 24500 | 40540 | 23590 |
| | 68 | 30640 | 22440 | 32060 | 23060 | 34090 | 24000 | 36000 | 24750 | 36620 | 24820 | 38930 | 24500 | 40540 | 23590 |
| | 70 | 30640 | 22440 | 32060 | 23060 | 34090 | 24000 | 36000 | 24750 | 36620 | 24820 | 38930 | 24500 | 40540 | 23590 |
| | 73 | 30640 | 22440 | 32060 | 23060 | 34090 | 24000 | 36000 | 24750 | 36620 | 24820 | 38930 | 24500 | 40540 | 23590 |
| | 77 | 30640 | 22440 | 32060 | 23060 | 34090 | 24000 | 36000 | 24750 | 36620 | 24820 | 38930 | 24500 | 40540 | 23590 |
| | 81 | 30640 | 22440 | 32060 | 23060 | 34090 | 24000 | 36000 | 24750 | 36620 | 24820 | 38930 | 24500 | 40540 | 23590 |
| | 84 | 30640 | 22440 | 32060 | 23060 | 34090 | 24000 | 36000 | 24750 | 36620 | 24820 | 38930 | 24500 | 40540 | 23590 |
| | 88 | 30640 | 22440 | 32060 | 23060 | 34090 | 24000 | 36000 | 24750 | 36620 | 24820 | 38930 | 24500 | 40540 | 23590 |
| | 91 | 30640 | 22440 | 32060 | 23060 | 34090 | 24000 | 36000 | 24750 | 36620 | 24820 | 38930 | 24500 | 40540 | 23590 |
| | 95 | 30640 | 22440 | 32060 | 23060 | 34090 | 24000 | 36000 | 24750 | 36620 | 24820 | 38930 | 24500 | 40540 | 23590 |
| | 99 | 29750 | 21790 | 31130 | 22390 | 33100 | 23300 | 34960 | 24030 | 35560 | 24100 | 37800 | 23790 | 39360 | 22910 |
| | 102 | 29050 | 21270 | 30390 | 21860 | 32320 | 22750 | 34130 | 23460 | 34720 | 23530 | 36910 | 23230 | 38430 | 22360 |
| 042 | 50 | 35750 | 26660 | 37400 | 27380 | 39770 | 28500 | 42000 | 29400 | 42720 | 29480 | 45420 | 29100 | 47290 | 28020 |
| | 54 | 35750 | 26660 | 37400 | 27380 | 39770 | 28500 | 42000 | 29400 | 42720 | 29480 | 45420 | 29100 | 47290 | 28020 |
| | 57 | 35750 | 26660 | 37400 | 27380 | 39770 | 28500 | 42000 | 29400 | 42720 | 29480 | 45420 | 29100 | 47290 | 28020 |
| | 61 | 35750 | 26660 | 37400 | 27380 | 39770 | 28500 | 42000 | 29400 | 42720 | 29480 | 45420 | 29100 | 47290 | 28020 |
| | 64 | 35750 | 26660 | 37400 | 27380 | 39770 | 28500 | 42000 | 29400 | 42720 | 29480 | 45420 | 29100 | 47290 | 28020 |
| | 68 | 35750 | 26660 | 37400 | 27380 | 39770 | 28500 | 42000 | 29400 | 42720 | 29480 | 45420 | 29100 | 47290 | 28020 |
| | 70 | 35750 | 26660 | 37400 | 27380 | 39770 | 28500 | 42000 | 29400 | 42720 | 29480 | 45420 | 29100 | 47290 | 28020 |
| | 73 | 35750 | 26660 | 37400 | 27380 | 39770 | 28500 | 42000 | 29400 | 42720 | 29480 | 45420 | 29100 | 47290 | 28020 |
| | 77 | 35750 | 26660 | 37400 | 27380 | 39770 | 28500 | 42000 | 29400 | 42720 | 29480 | 45420 | 29100 | 47290 | 28020 |
| | 81 | 35750 | 26660 | 37400 | 27380 | 39770 | 28500 | 42000 | 29400 | 42720 | 29480 | 45420 | 29100 | 47290 | 28020 |
| | 84 | 35750 | 26660 | 37400 | 27380 | 39770 | 28500 | 42000 | 29400 | 42720 | 29480 | 45420 | 29100 | 47290 | 28020 |
| | 88 | 35750 | 26660 | 37400 | 27380 | 39770 | 28500 | 42000 | 29400 | 42720 | 29480 | 45420 | 29100 | 47290 | 28020 |
| | 91 | 35750 | 26660 | 37400 | 27380 | 39770 | 28500 | 42000 | 29400 | 42720 | 29480 | 45420 | 29100 | 47290 | 28020 |
| | 95 | 35750 | 26660 | 37400 | 27380 | 39770 | 28500 | 42000 | 29400 | 42720 | 29480 | 45420 | 29100 | 47290 | 28020 |
| | 99 | 34710 | 25890 | 36320 | 26590 | 38620 | 27670 | 40780 | 28550 | 41480 | 28630 | 44100 | 28260 | 45920 | 27210 |
| | 102 | 33890 | 25270 | 35460 | 25960 | 37700 | 27020 | 39820 | 27870 | 40500 | 27950 | 43060 | 27590 | 44830 | 26560 |

## 7. Air throw distance chart

MMU-AP0182H2UL

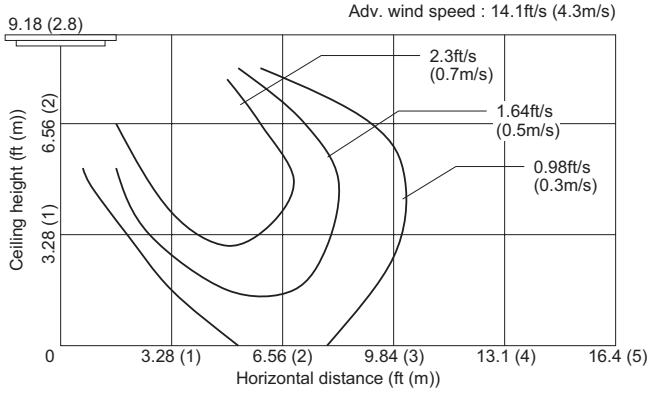


MMU-AP0212H2UL/AP0242H2UL/AP0302H2UL

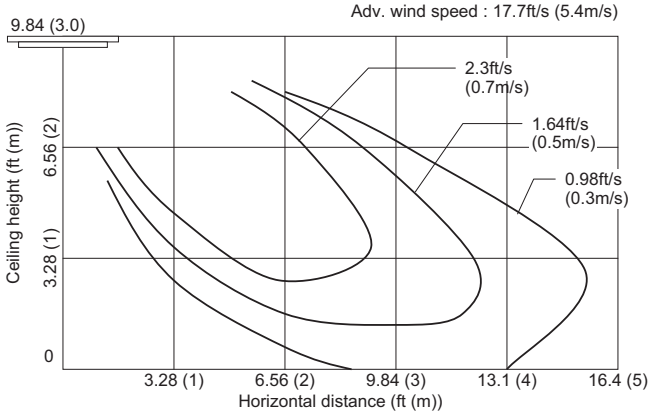


MMU-AP0362H2UL

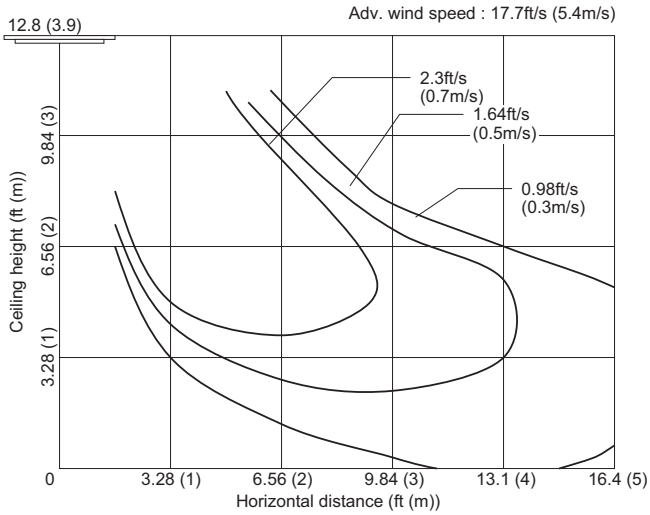


MMU-AP0422H2UL

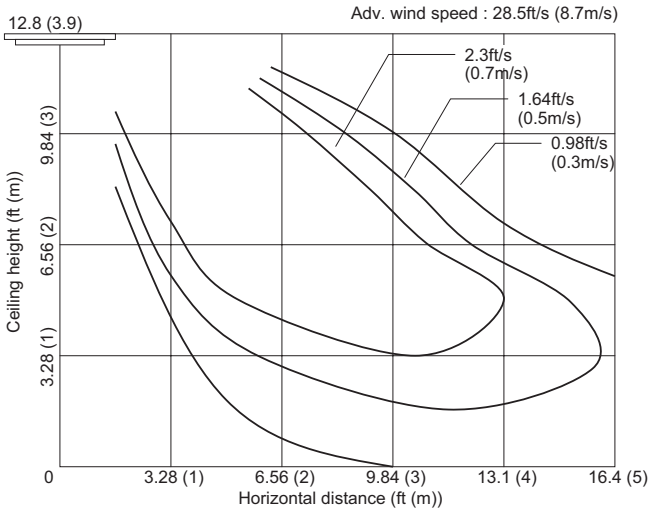


MMU-AP0362H2UL/AP0422H2UL (High ceiling (3))

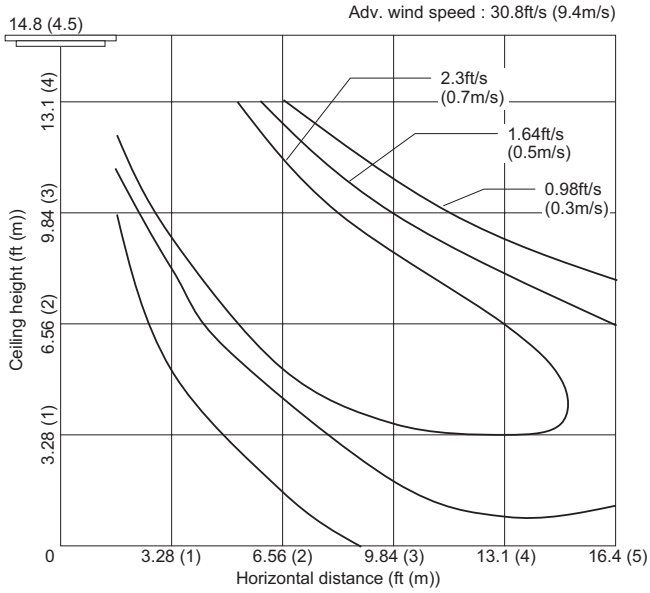

## 8. Sound characteristics (NC-Curve)

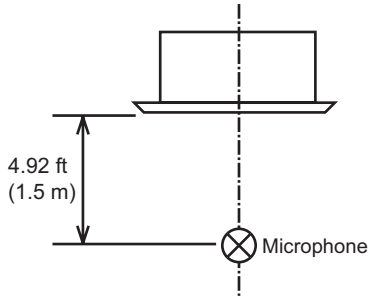


**MMU-AP0182H2UL**

| Sound pressure level (dB (A)) | H - M - L |
|---|---|
| | 35-33-31.5 |

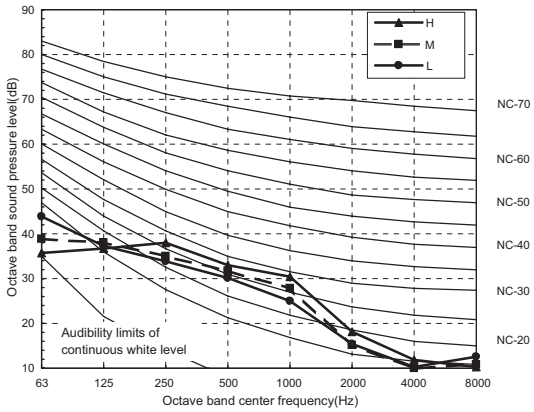


**MMU-AP0212H2UL/0242H2UL**

| Sound pressure level (dB (A)) | H - M - L |
|---|---|
| | 38-33-31 |

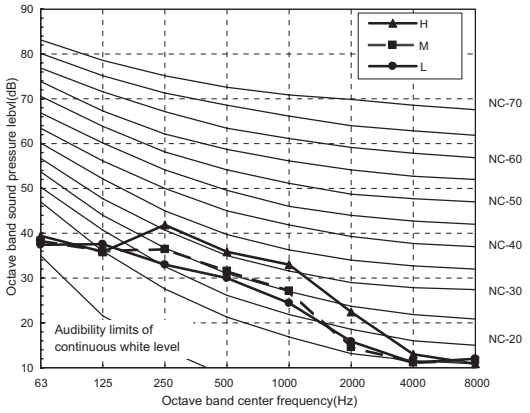


**MMU-AP0302H2UL**

| Sound pressure level (dB (A)) | H - M - L |
|---|---|
| | 41-36.5-34 |

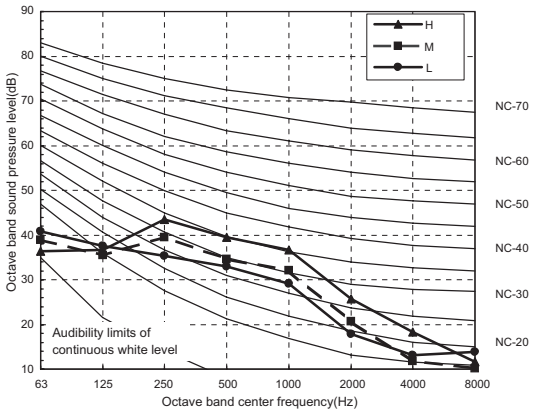


**MMU-AP0362H2UL**

| Sound pressure level (dB (A)) | H - M - L |
|---|---|
| | 46-40.5-36.5 |

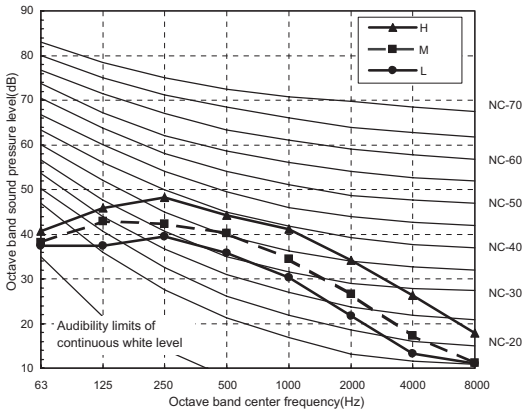


**MMU-AP0422H2UL**

| Sound pressure level (dB (A)) | H - M - L |
|---|---|
| | 48.5-40.5-37.5 |

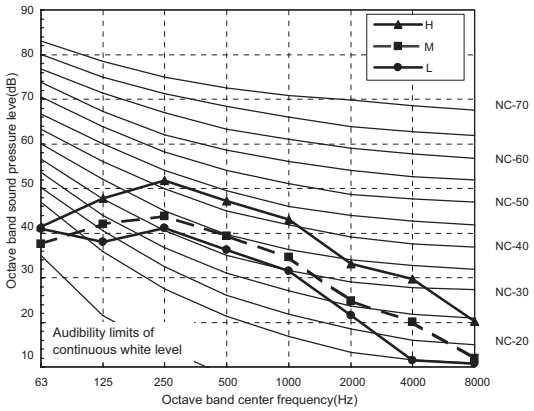

## 9. Fresh air intake (Design guide)

### 4-Way Cassette type

### Usage
The fresh air and filter chamber is used as the filter chamber.
Fresh air intake by using the fresh air and filter chamber and fresh air inlet box.

### Usage as the filter chamber
In case the optional filter is used, air volume may decrease. This can cause decrease temperature of cooling air flow and dew drop.

### Caution
1. Be sure to provide air return.
2. The fresh air shall be treated by heat reclaim ventilator or the like.
3. Recommended treated air temperature is 54°F to 86°F.
4. Be sure to decide the fresh air volume so that mixed suction air with fresh air keep operating temperature.
   Provide an air filter in fresh air way to prevent sucking dust.
5. Be sure to insulate the fresh air duct.
   In order to accelate starting up in heating mode, implement pre-heating operation by cutting off fresh air intake.

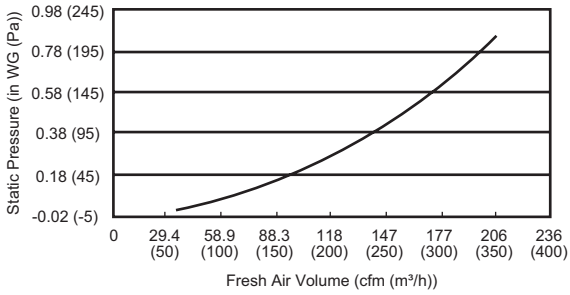


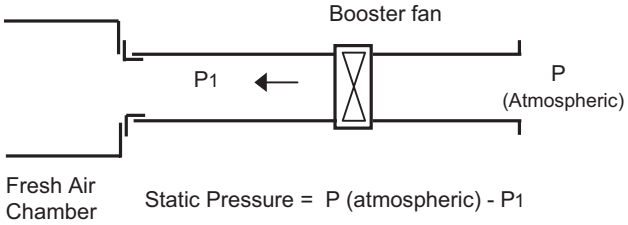


### Characteristics between air volume of branching duct and static pressure
Up to 20% fresh air intake ratio is available by using the booster fan.
fresh air intake ratio = ( fresh air volume ) / ( total air volume ) X 100 %

### Inter - lock circuit
1. Connect the driving relay of the duct fan ( DC 12 V ) between 1 and 6 on the indoor P.C.board.
   Part indicated with a bold line is the connecting circuit.
   After installation, implement a trial operation to check that the duct fan of the indoor unit start / stop simultaneously.
   (Implement the trial operation following to the installation manual of the indoor unit.)

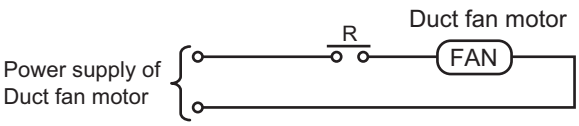


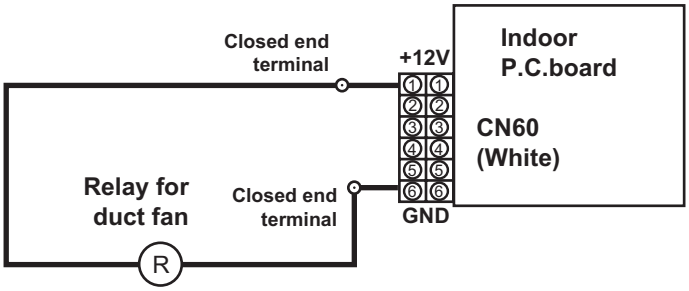

## 10. Branching duct (Design guide)

### 4-Way Cassette type

### Characteristics between air volume of branching duct and static pressure

In case of connecting dia.= 5.91 inch (150 mm) branching duct, static pressure is as follows.

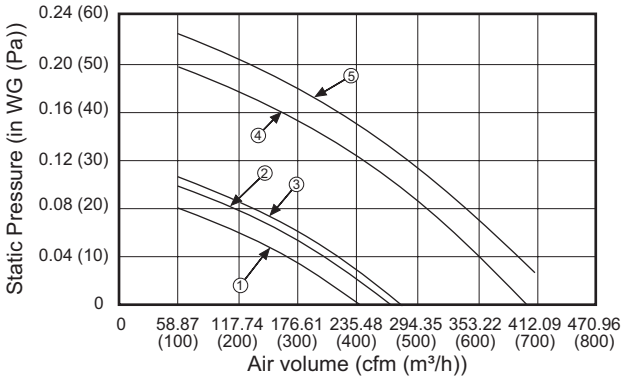


| | Model |
|---|---|
| ① | 018type |
| ② | 021type,024type |
| ③ | 030type |
| ④ | 036type |
| ⑤ | 042type |

### Cover method

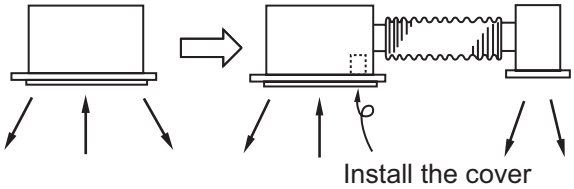


Use air discharge direction kit
(TCB-BC1602UUL)
to cover the air discharge port.

### Dimension

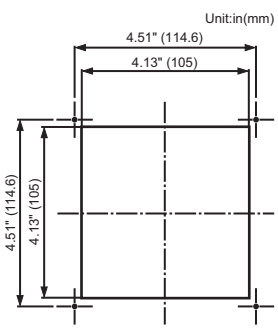


Knockout square for
branching duct
in indoor unit

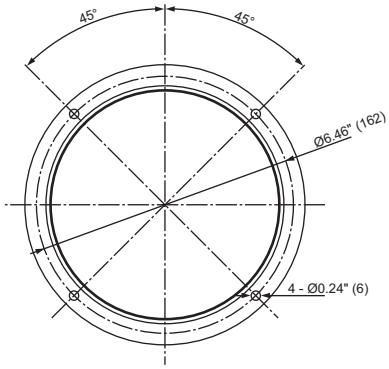


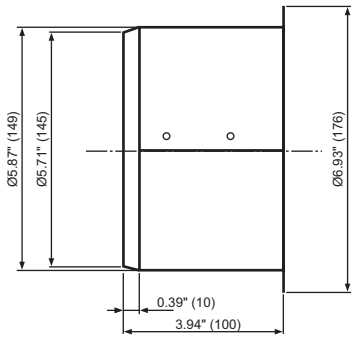


Design sample of branching duct flange

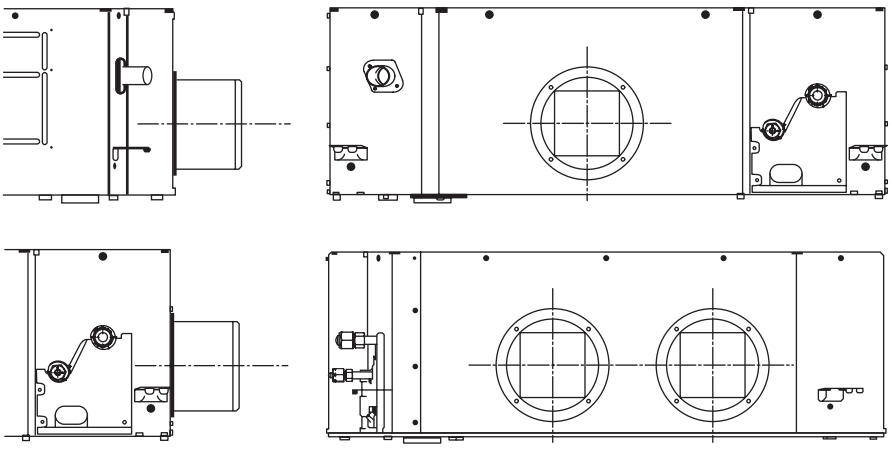

Installation sample

## 11. Accessories

**Optional parts for 4-Way Cassette type**

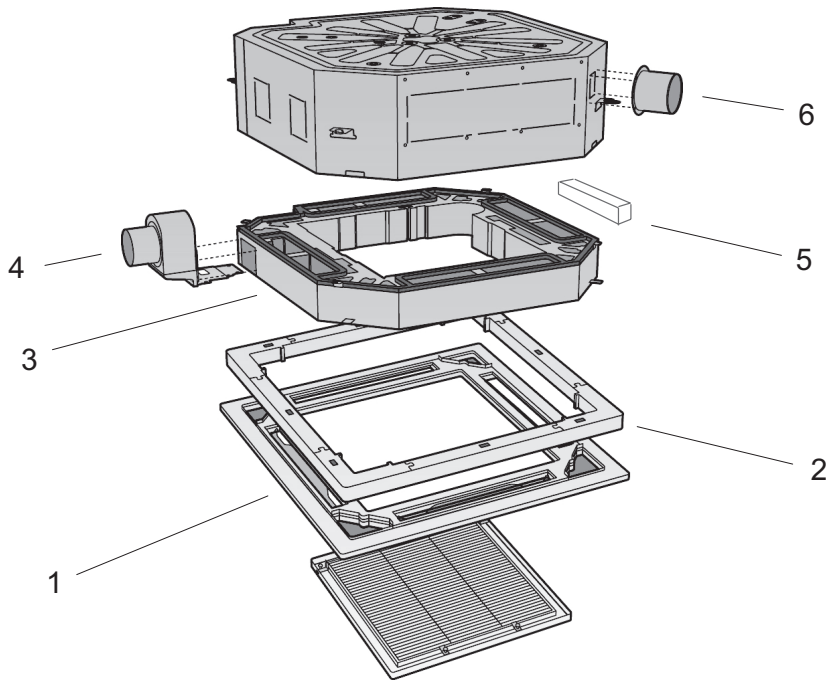


**Optional parts list**

| No | Type | Model name | Qty/unit | Notes |
|---|---|---|---|---|
| 1 | Ceiling Panel (wide-flow louver) | RBC-U31PG(W)-UL | 1 | White (2.5GY9.0/0.5) |
| 2 | Spacer for height adjustment | TCB-SP1602UUL | 1 | 50mm |
| 3 | Fresh-air chamber | TCB-GFC1602UUL | 1 | Use with TCB-GB1602UUL |
| 4 | Fresh-air inlet box | TCB-GB1602UUL | 1 | Connection=Dia.100mm<br>Fresh air intake ratio: Up to 20% |
| 5 | Air-discharge direction kit | TCB-BC1602UUL | 1 | 6-direction patterns |
| 6 | Auxiliary fresh air flange | TCB-FF101URUL | 1 | Connection=Dia.100mm<br>Fresh air intake ratio: Up to 5% |

6-2-2. Compact 4-Way Cassette type

# Compact 4-Way Cassette type

**MMU-AP0071MH2UL**

**MMU-AP0091MH2UL**

**MMU-AP0121MH2UL**

**MMU-AP0151MH2UL**

**MMU-AP0181MH2UL**

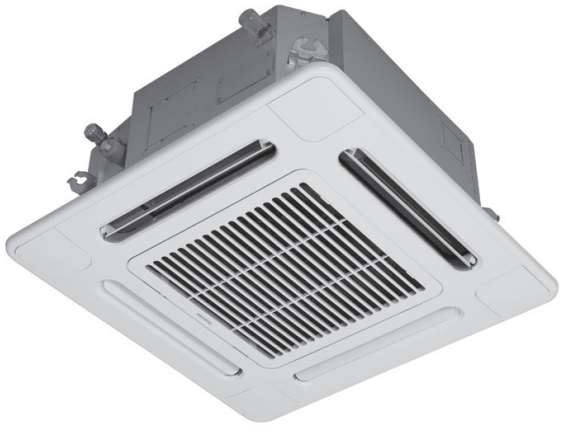

## Contents

1. Specification
2. Dimension
3. Wiring diagram
4. Center of Gravity
5. Electrical current characteristics
6. Sensible capacity table
7. Air throw distance chart
8. Sound characteristics (NC-Curve)
9. Accessory

# 1. Specification

## Compact 4-Way Cassette type

| Model name | | | MMU- | AP0071MH2UL | AP0091MH2UL | AP0121MH2UL | AP0151MH2UL | AP0181MH2UL |
|---|---|---|---|---|---|---|---|---|
| Cooling Capacity | | | kBtu/h | 7.5 | 9.5 | 12 | 15.4 | 18 |
| Heating Capacity | | | kBtu/h | 8.5 | 10.5 | 13.5 | 17 | 20 |
| Electrical charastaristics | Power supply | | | 230V(208/230V) 1phase 60Hz | | | | |
| | Power consumption | | kW | 0.034 | 0.036 | 0.038 | 0.041 | 0.052 |
| Appearance | Main unit | | | Zinc hot dipping steel plate Heat-instulating material attached to only upper plate | | | | |
| | Ceiling panel | Model | | RBC-U11PG(W)-UL | | | | |
| | | Panel color | | White (2.5GY9.0/0.5) | | | | |
| Dimension (Ceiling panel)* | Unit | Height | In | 10.6(1.1)* | 10.6(1.1)* | 10.6(1.1)* | 10.6(1.1)* | 10.6(1.1)* |
| | | Width | In | 22.6(27.6)* | 22.6(27.6)* | 22.6(27.6)* | 22.6(27.6)* | 22.6(27.6)* |
| | | Depth | In | 22.6(27.6)* | 22.6(27.6)* | 22.6(27.6)* | 22.6(27.6)* | 22.6(27.6)* |
| | Packing | Height | In | 12.7(3.9)* | 12.7(3.9)* | 12.7(3.9)* | 12.7(3.9)* | 12.7(3.9)* |
| | | Width | In | 25.1(30.9)* | 25.1(30.9)* | 25.1(30.9)* | 25.1(30.9)* | 25.1(30.9)* |
| | | Depth | In | 27.8(31.8)* | 27.8(31.8)* | 27.8(31.8)* | 27.8(31.8)* | 27.8(31.8)* |
| Total weight (Ceiling panel)* | Unit | | lb | 35(7)* | 35(7)* | 35(7)* | 35(7)* | 35(7)* |
| | Packed unit | | lb | 42(13)* | 42(13)* | 42(13)* | 42(13)* | 42(13)* |
| Heat exchanger | | | | Finned tube | | | | |
| Fan unit | Fan | | | Turbo fan | | | | |
| | Standard air flow(High/Mid/Low) | | cfm | 320/270/220 | 330/280/220 | 330/300/240 | 390/330/280 | 450/380/310 |
| | Motor | | W | 60 | 60 | 60 | 60 | 60 |
| Air filter | | | | Long life filter | | | | |
| Connecting pipe | Gas side | | In | 3/8" | 3/8" | 3/8" | 1/2" | 1/2" |
| | Liquid side | | In | 1/4" | 1/4" | 1/4" | 1/4" | 1/4" |
| | Drain port (Nominal dia.) | | In | VP25(Polyvinyl chloride tube: External Dia.1-1/4 Internal Dia.1) | | | | |
| Sound puressure level (High/Mid/Low) (*1) | | | dB(A) | 38.5/35/31 | 40/35.5/31 | 40/36/32 | 42.5/37.5/33 | 46.5/41.5/36 |

Note

* Figures in parentheses are for ceiling panels.

(*1) The actual values in an external operating environment are generally higher than the indicated values due to the contribution from ambient noise.

## 2. Dimension

MMU-AP0071MH2UL, AP0091MH2UL, AP0121MH2UL, AP0151MH2UL, AP0181MH2UL

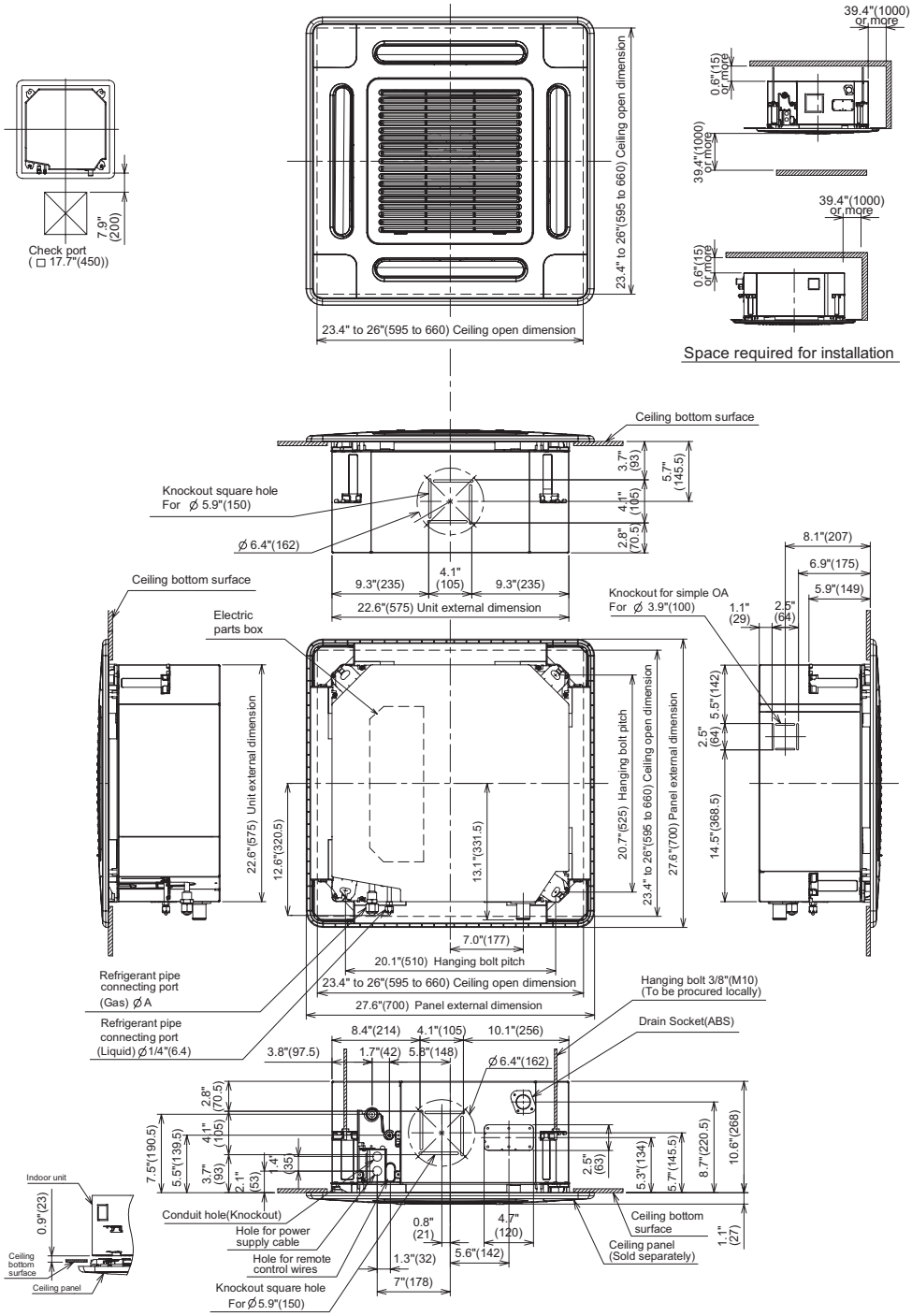


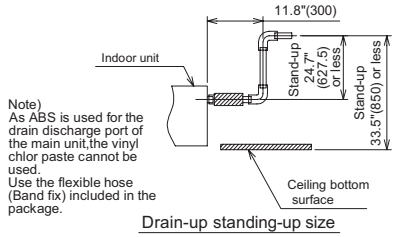


Drain-up standing-up size

Note)
As ABS is used for the drain discharge port of the main unit,the vinyl chlor paste cannot be used.
Use the flexible hose (Band fix) included in the package.

Unit:in(mm)

| Model MMU- | A |
|---|---|
| AP007, 009, 012 Type | 3/8" (9.5) |
| AP015, 018 Type | 1/2" (12.7) |

## 3. Wiring diagram

MMU-AP0071MH2UL, AP0091MH2UL, AP0121MH2UL, AP0151MH2UL, AP0181MH2UL

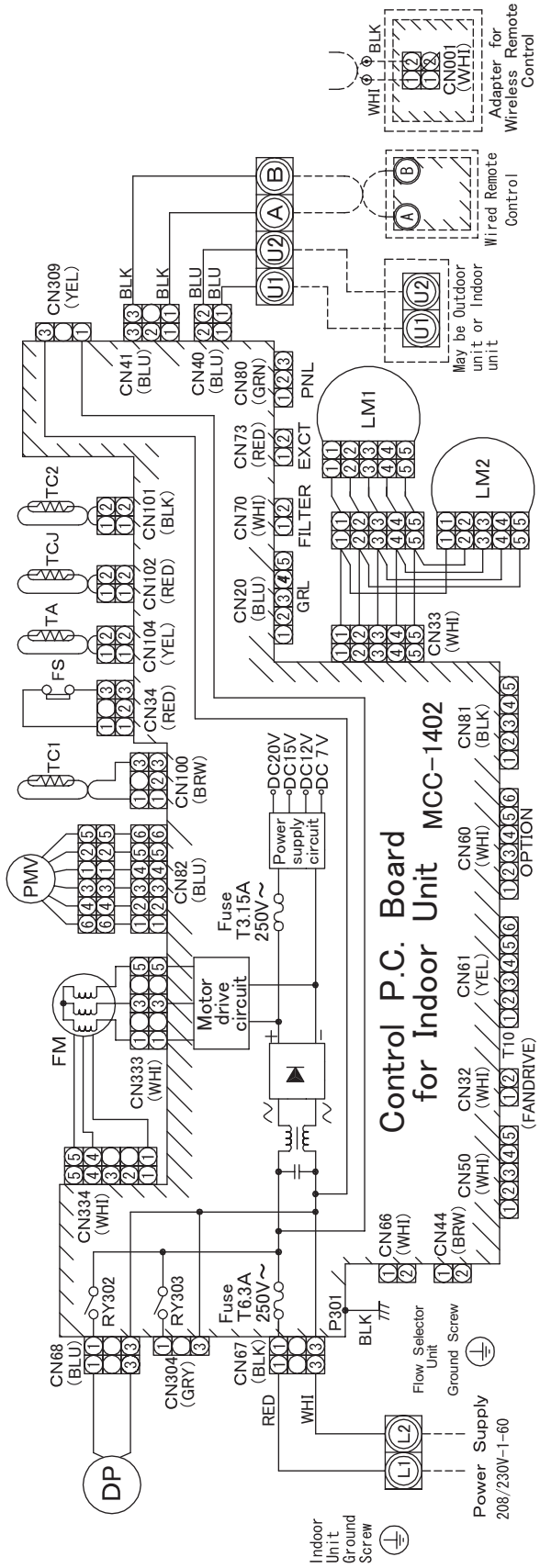


COLOR IDENTIFICATION

RED:RED
WHI:WHITE
YEL:YELLOW
BLU:BLUE
BLK:BLACK
GRY:GRAY
PNK:PINK
ORN:ORANGE
GRN:GREEN
BRW:BROWN

| Symbol | Parts Name |
|---|---|
| FM | Fan Motor |
| TA | Indoor temp sensor |
| TC1 | Temp sensor |
| TCJ | Temp sensor |
| TC2 | Temp sensor |
| LM1,LM2 | Louver Motor |
| DP | Drain Pump Motor |
| FS | Float Switch |
| RY302 | Drain Control Relay |
| PMV | Pulse Motor Valve |

1. ◎ indicates the terminal block letter. Letter at inside indicates the terminal number.
2. A dotted line and broken line indicate the wiring at site.
3. ▨ indicates the control P.C board.

## 4. Center of Gravity

| Model name | X (In) | Y (In) | Z (In) | Total weight | |
|---|---|---|---|---|---|
| | | | | Main unit (lb) | Ceiling panel (lb) |
| MMU-AP0071MH2UL | 12.46 | 13.25 | 6.85 | 35 | 6.6 |
| MMU-AP0091MH2UL | | | | | |
| MMU-AP0121MH2UL | | | | | |
| MMU-AP0151MH2UL | | | | | |
| MMU-AP0181MH2UL | | | | | |

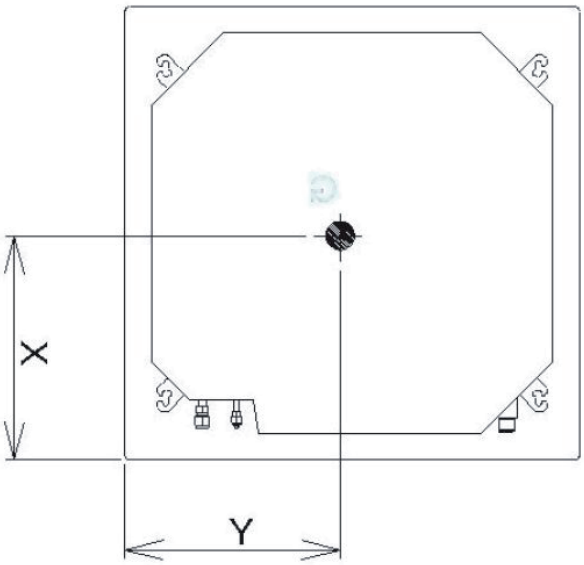


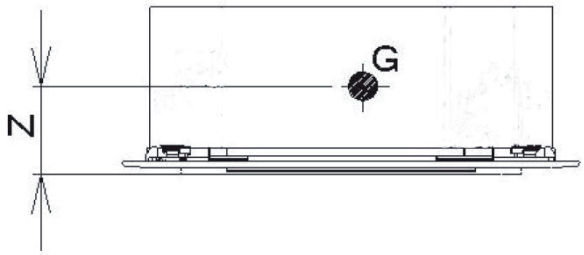


## 5. Electrical current characteristics

| Type | Model | Nominal Voltage (V-Ph-Hz) | Voltage Range (V) | | Power consumption | FLA | MCA | MOCP |
|---|---|---|---|---|---|---|---|---|
| | | | Min | Max | kW | A | A | A |
| Compact 4-Way Cassette type | MMU-AP0071MH2UL | 208/230-1-60 | 187 | 253 | 0.034 | 0.4 | 0.5 | 15 |
| | MMU-AP0091MH2UL | 208/230-1-60 | 187 | 253 | 0.036 | 0.4 | 0.5 | 15 |
| | MMU-AP0121MH2UL | 208/230-1-60 | 187 | 253 | 0.038 | 0.4 | 0.5 | 15 |
| | MMU-AP0151MH2UL | 208/230-1-60 | 187 | 253 | 0.041 | 0.5 | 0.7 | 15 |
| | MMU-AP0181MH2UL | 208/230-1-60 | 187 | 253 | 0.052 | 0.5 | 0.7 | 15 |

MCA : Minimum Circuit Amps
FLA : Full Load Amps
MOCP : Maximum Overcurrent Protection (Amps)

## 6. Sensible capacity table

Compact 4-Way Cassette type (MMU-***1MH2UL)

TC: Total capacity [Btu/h] SHC: Sensible capacity [Btu/h]

| unit size | outdoor air temp. °FDB | indoor air temp. | | | | | | | | | | | | | |
|---|---|---|---|---|---|---|---|---|---|---|---|---|---|---|---|
| | | 59°FWB | | 61°FWB | | 64°FWB | | 67°FWB | | 68°FWB | | 72°FWB | | 75°FWB | |
| | | 71°FDB | | 73°FDB | | 77°FDB | | 80°FDB | | 82°FDB | | 86°FDB | | 90°FDB | |
| | | TC | SHC | TC | SHC | TC | SHC | TC | SHC | TC | SHC | TC | SHC | TC | SHC |
| 007 | 50 | 6380 | 5260 | 6680 | 5400 | 7100 | 5620 | 7500 | 5800 | 7630 | 5820 | 8110 | 5740 | 8450 | 5530 |
| | 54 | 6380 | 5260 | 6680 | 5400 | 7100 | 5620 | 7500 | 5800 | 7630 | 5820 | 8110 | 5740 | 8450 | 5530 |
| | 57 | 6380 | 5260 | 6680 | 5400 | 7100 | 5620 | 7500 | 5800 | 7630 | 5820 | 8110 | 5740 | 8450 | 5530 |
| | 61 | 6380 | 5260 | 6680 | 5400 | 7100 | 5620 | 7500 | 5800 | 7630 | 5820 | 8110 | 5740 | 8450 | 5530 |
| | 64 | 6380 | 5260 | 6680 | 5400 | 7100 | 5620 | 7500 | 5800 | 7630 | 5820 | 8110 | 5740 | 8450 | 5530 |
| | 68 | 6380 | 5260 | 6680 | 5400 | 7100 | 5620 | 7500 | 5800 | 7630 | 5820 | 8110 | 5740 | 8450 | 5530 |
| | 70 | 6380 | 5260 | 6680 | 5400 | 7100 | 5620 | 7500 | 5800 | 7630 | 5820 | 8110 | 5740 | 8450 | 5530 |
| | 73 | 6380 | 5260 | 6680 | 5400 | 7100 | 5620 | 7500 | 5800 | 7630 | 5820 | 8110 | 5740 | 8450 | 5530 |
| | 77 | 6380 | 5260 | 6680 | 5400 | 7100 | 5620 | 7500 | 5800 | 7630 | 5820 | 8110 | 5740 | 8450 | 5530 |
| | 81 | 6380 | 5260 | 6680 | 5400 | 7100 | 5620 | 7500 | 5800 | 7630 | 5820 | 8110 | 5740 | 8450 | 5530 |
| | 84 | 6380 | 5260 | 6680 | 5400 | 7100 | 5620 | 7500 | 5800 | 7630 | 5820 | 8110 | 5740 | 8450 | 5530 |
| | 88 | 6380 | 5260 | 6680 | 5400 | 7100 | 5620 | 7500 | 5800 | 7630 | 5820 | 8110 | 5740 | 8450 | 5530 |
| | 91 | 6380 | 5260 | 6680 | 5400 | 7100 | 5620 | 7500 | 5800 | 7630 | 5820 | 8110 | 5740 | 8450 | 5530 |
| | 95 | 6380 | 5260 | 6680 | 5400 | 7100 | 5620 | 7500 | 5800 | 7630 | 5820 | 8110 | 5740 | 8450 | 5530 |
| | 99 | 6190 | 5110 | 6490 | 5240 | 6890 | 5460 | 7280 | 5630 | 7410 | 5650 | 7870 | 5570 | 8200 | 5370 |
| | 102 | 6050 | 4990 | 6330 | 5120 | 6730 | 5330 | 7110 | 5500 | 7230 | 5520 | 7690 | 5440 | 8010 | 5240 |
| 009 | 50 | 8090 | 6160 | 8460 | 6320 | 9000 | 6590 | 9500 | 6790 | 9660 | 6810 | 10270 | 6720 | 10700 | 6470 |
| | 54 | 8090 | 6160 | 8460 | 6320 | 9000 | 6590 | 9500 | 6790 | 9660 | 6810 | 10270 | 6720 | 10700 | 6470 |
| | 57 | 8090 | 6160 | 8460 | 6320 | 9000 | 6590 | 9500 | 6790 | 9660 | 6810 | 10270 | 6720 | 10700 | 6470 |
| | 61 | 8090 | 6160 | 8460 | 6320 | 9000 | 6590 | 9500 | 6790 | 9660 | 6810 | 10270 | 6720 | 10700 | 6470 |
| | 64 | 8090 | 6160 | 8460 | 6320 | 9000 | 6590 | 9500 | 6790 | 9660 | 6810 | 10270 | 6720 | 10700 | 6470 |
| | 68 | 8090 | 6160 | 8460 | 6320 | 9000 | 6590 | 9500 | 6790 | 9660 | 6810 | 10270 | 6720 | 10700 | 6470 |
| | 70 | 8090 | 6160 | 8460 | 6320 | 9000 | 6590 | 9500 | 6790 | 9660 | 6810 | 10270 | 6720 | 10700 | 6470 |
| | 73 | 8090 | 6160 | 8460 | 6320 | 9000 | 6590 | 9500 | 6790 | 9660 | 6810 | 10270 | 6720 | 10700 | 6470 |
| | 77 | 8090 | 6160 | 8460 | 6320 | 9000 | 6590 | 9500 | 6790 | 9660 | 6810 | 10270 | 6720 | 10700 | 6470 |
| | 81 | 8090 | 6160 | 8460 | 6320 | 9000 | 6590 | 9500 | 6790 | 9660 | 6810 | 10270 | 6720 | 10700 | 6470 |
| | 84 | 8090 | 6160 | 8460 | 6320 | 9000 | 6590 | 9500 | 6790 | 9660 | 6810 | 10270 | 6720 | 10700 | 6470 |
| | 88 | 8090 | 6160 | 8460 | 6320 | 9000 | 6590 | 9500 | 6790 | 9660 | 6810 | 10270 | 6720 | 10700 | 6470 |
| | 91 | 8090 | 6160 | 8460 | 6320 | 9000 | 6590 | 9500 | 6790 | 9660 | 6810 | 10270 | 6720 | 10700 | 6470 |
| | 95 | 8090 | 6160 | 8460 | 6320 | 9000 | 6590 | 9500 | 6790 | 9660 | 6810 | 10270 | 6720 | 10700 | 6470 |
| | 99 | 7860 | 5980 | 8210 | 6140 | 8740 | 6400 | 9220 | 6590 | 9380 | 6610 | 9970 | 6530 | 10390 | 6280 |
| | 102 | 7670 | 5840 | 8020 | 5990 | 8530 | 6250 | 9010 | 6440 | 9160 | 6460 | 9740 | 6370 | 10140 | 6130 |
| 012 | 50 | 10210 | 7550 | 10690 | 7760 | 11360 | 8070 | 12000 | 8330 | 12210 | 8360 | 12980 | 8250 | 13510 | 7940 |
| | 54 | 10210 | 7550 | 10690 | 7760 | 11360 | 8070 | 12000 | 8330 | 12210 | 8360 | 12980 | 8250 | 13510 | 7940 |
| | 57 | 10210 | 7550 | 10690 | 7760 | 11360 | 8070 | 12000 | 8330 | 12210 | 8360 | 12980 | 8250 | 13510 | 7940 |
| | 61 | 10210 | 7550 | 10690 | 7760 | 11360 | 8070 | 12000 | 8330 | 12210 | 8360 | 12980 | 8250 | 13510 | 7940 |
| | 64 | 10210 | 7550 | 10690 | 7760 | 11360 | 8070 | 12000 | 8330 | 12210 | 8360 | 12980 | 8250 | 13510 | 7940 |
| | 68 | 10210 | 7550 | 10690 | 7760 | 11360 | 8070 | 12000 | 8330 | 12210 | 8360 | 12980 | 8250 | 13510 | 7940 |
| | 70 | 10210 | 7550 | 10690 | 7760 | 11360 | 8070 | 12000 | 8330 | 12210 | 8360 | 12980 | 8250 | 13510 | 7940 |
| | 73 | 10210 | 7550 | 10690 | 7760 | 11360 | 8070 | 12000 | 8330 | 12210 | 8360 | 12980 | 8250 | 13510 | 7940 |
| | 77 | 10210 | 7550 | 10690 | 7760 | 11360 | 8070 | 12000 | 8330 | 12210 | 8360 | 12980 | 8250 | 13510 | 7940 |
| | 81 | 10210 | 7550 | 10690 | 7760 | 11360 | 8070 | 12000 | 8330 | 12210 | 8360 | 12980 | 8250 | 13510 | 7940 |
| | 84 | 10210 | 7550 | 10690 | 7760 | 11360 | 8070 | 12000 | 8330 | 12210 | 8360 | 12980 | 8250 | 13510 | 7940 |
| | 88 | 10210 | 7550 | 10690 | 7760 | 11360 | 8070 | 12000 | 8330 | 12210 | 8360 | 12980 | 8250 | 13510 | 7940 |
| | 91 | 10210 | 7550 | 10690 | 7760 | 11360 | 8070 | 12000 | 8330 | 12210 | 8360 | 12980 | 8250 | 13510 | 7940 |
| | 95 | 10210 | 7550 | 10690 | 7760 | 11360 | 8070 | 12000 | 8330 | 12210 | 8360 | 12980 | 8250 | 13510 | 7940 |
| | 99 | 9910 | 7330 | 10380 | 7530 | 11030 | 7840 | 11650 | 8090 | 11860 | 8120 | 12600 | 8010 | 13120 | 7710 |
| | 102 | 9680 | 7160 | 10130 | 7360 | 10770 | 7650 | 11380 | 7900 | 11580 | 7930 | 12310 | 7820 | 12810 | 7530 |

## Compact 4-Way Cassette type (MMU-***1MH2UL)

TC: Total capacity [Btu/h] SHC: Sensible capacity [Btu/h]

| unit size | outdoor air temp. °FDB | indoor air temp. | | | | | | | | | | | | | |
|---|---|---|---|---|---|---|---|---|---|---|---|---|---|---|---|
| | | 59°FWB | | 61°FWB | | 64°FWB | | 67°FWB | | 68°FWB | | 72°FWB | | 75°FWB | |
| | | 71°FDB | | 73°FDB | | 77°FDB | | 80°FDB | | 82°FDB | | 86°FDB | | 90°FDB | |
| | | TC | SHC | TC | SHC | TC | SHC | TC | SHC | TC | SHC | TC | SHC | TC | SHC |
| 015 | 50 | 13110 | 9620 | 13710 | 9880 | 14580 | 10290 | 15400 | 10610 | 15660 | 10640 | 16660 | 10510 | 17340 | 10110 |
| | 54 | 13110 | 9620 | 13710 | 9880 | 14580 | 10290 | 15400 | 10610 | 15660 | 10640 | 16660 | 10510 | 17340 | 10110 |
| | 57 | 13110 | 9620 | 13710 | 9880 | 14580 | 10290 | 15400 | 10610 | 15660 | 10640 | 16660 | 10510 | 17340 | 10110 |
| | 61 | 13110 | 9620 | 13710 | 9880 | 14580 | 10290 | 15400 | 10610 | 15660 | 10640 | 16660 | 10510 | 17340 | 10110 |
| | 64 | 13110 | 9620 | 13710 | 9880 | 14580 | 10290 | 15400 | 10610 | 15660 | 10640 | 16660 | 10510 | 17340 | 10110 |
| | 68 | 13110 | 9620 | 13710 | 9880 | 14580 | 10290 | 15400 | 10610 | 15660 | 10640 | 16660 | 10510 | 17340 | 10110 |
| | 70 | 13110 | 9620 | 13710 | 9880 | 14580 | 10290 | 15400 | 10610 | 15660 | 10640 | 16660 | 10510 | 17340 | 10110 |
| | 73 | 13110 | 9620 | 13710 | 9880 | 14580 | 10290 | 15400 | 10610 | 15660 | 10640 | 16660 | 10510 | 17340 | 10110 |
| | 77 | 13110 | 9620 | 13710 | 9880 | 14580 | 10290 | 15400 | 10610 | 15660 | 10640 | 16660 | 10510 | 17340 | 10110 |
| | 81 | 13110 | 9620 | 13710 | 9880 | 14580 | 10290 | 15400 | 10610 | 15660 | 10640 | 16660 | 10510 | 17340 | 10110 |
| | 84 | 13110 | 9620 | 13710 | 9880 | 14580 | 10290 | 15400 | 10610 | 15660 | 10640 | 16660 | 10510 | 17340 | 10110 |
| | 88 | 13110 | 9620 | 13710 | 9880 | 14580 | 10290 | 15400 | 10610 | 15660 | 10640 | 16660 | 10510 | 17340 | 10110 |
| | 91 | 13110 | 9620 | 13710 | 9880 | 14580 | 10290 | 15400 | 10610 | 15660 | 10640 | 16660 | 10510 | 17340 | 10110 |
| | 95 | 13110 | 9620 | 13710 | 9880 | 14580 | 10290 | 15400 | 10610 | 15660 | 10640 | 16660 | 10510 | 17340 | 10110 |
| | 99 | 12730 | 9340 | 13310 | 9590 | 14160 | 9990 | 14950 | 10300 | 15210 | 10330 | 16180 | 10210 | 16840 | 9820 |
| | 102 | 12430 | 9120 | 13000 | 9370 | 13820 | 9750 | 14600 | 10060 | 14850 | 10090 | 15790 | 9960 | 16440 | 9580 |
| 018 | 50 | 15320 | 10490 | 16030 | 10780 | 17040 | 11210 | 18000 | 11570 | 18310 | 11600 | 19470 | 11460 | 20270 | 11030 |
| | 54 | 15320 | 10490 | 16030 | 10780 | 17040 | 11210 | 18000 | 11570 | 18310 | 11600 | 19470 | 11460 | 20270 | 11030 |
| | 57 | 15320 | 10490 | 16030 | 10780 | 17040 | 11210 | 18000 | 11570 | 18310 | 11600 | 19470 | 11460 | 20270 | 11030 |
| | 61 | 15320 | 10490 | 16030 | 10780 | 17040 | 11210 | 18000 | 11570 | 18310 | 11600 | 19470 | 11460 | 20270 | 11030 |
| | 64 | 15320 | 10490 | 16030 | 10780 | 17040 | 11210 | 18000 | 11570 | 18310 | 11600 | 19470 | 11460 | 20270 | 11030 |
| | 68 | 15320 | 10490 | 16030 | 10780 | 17040 | 11210 | 18000 | 11570 | 18310 | 11600 | 19470 | 11460 | 20270 | 11030 |
| | 70 | 15320 | 10490 | 16030 | 10780 | 17040 | 11210 | 18000 | 11570 | 18310 | 11600 | 19470 | 11460 | 20270 | 11030 |
| | 73 | 15320 | 10490 | 16030 | 10780 | 17040 | 11210 | 18000 | 11570 | 18310 | 11600 | 19470 | 11460 | 20270 | 11030 |
| | 77 | 15320 | 10490 | 16030 | 10780 | 17040 | 11210 | 18000 | 11570 | 18310 | 11600 | 19470 | 11460 | 20270 | 11030 |
| | 81 | 15320 | 10490 | 16030 | 10780 | 17040 | 11210 | 18000 | 11570 | 18310 | 11600 | 19470 | 11460 | 20270 | 11030 |
| | 84 | 15320 | 10490 | 16030 | 10780 | 17040 | 11210 | 18000 | 11570 | 18310 | 11600 | 19470 | 11460 | 20270 | 11030 |
| | 88 | 15320 | 10490 | 16030 | 10780 | 17040 | 11210 | 18000 | 11570 | 18310 | 11600 | 19470 | 11460 | 20270 | 11030 |
| | 91 | 15320 | 10490 | 16030 | 10780 | 17040 | 11210 | 18000 | 11570 | 18310 | 11600 | 19470 | 11460 | 20270 | 11030 |
| | 95 | 15320 | 10490 | 16030 | 10780 | 17040 | 11210 | 18000 | 11570 | 18310 | 11600 | 19470 | 11460 | 20270 | 11030 |
| | 99 | 14880 | 10190 | 15570 | 10470 | 16550 | 10880 | 17480 | 11230 | 17780 | 11260 | 18910 | 11130 | 19680 | 10710 |
| | 102 | 14520 | 9940 | 15200 | 10220 | 16150 | 10630 | 17060 | 10970 | 17360 | 11000 | 18460 | 10860 | 19220 | 10460 |

## 7. Air throw distance chart

### MMU-AP0071MH2UL

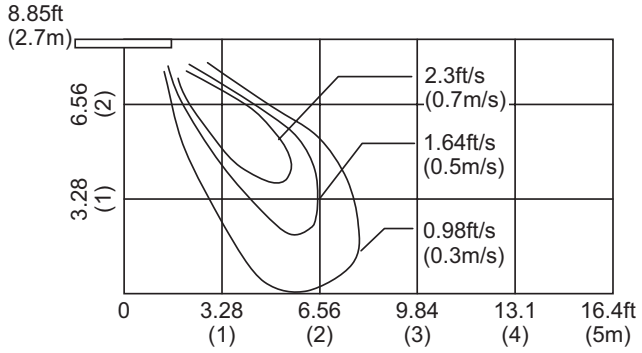


### MMU-AP0091MH2UL

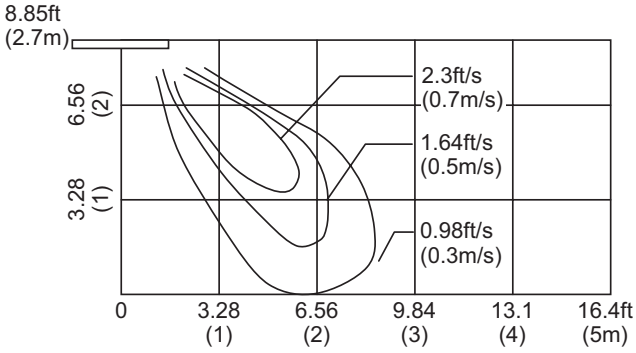


### MMU-AP0121MH2UL

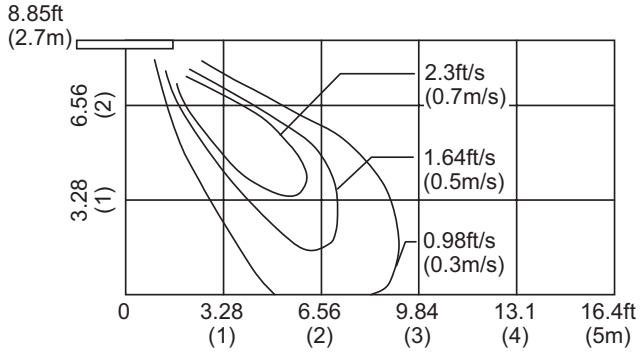


### MMU-AP0151MH2UL

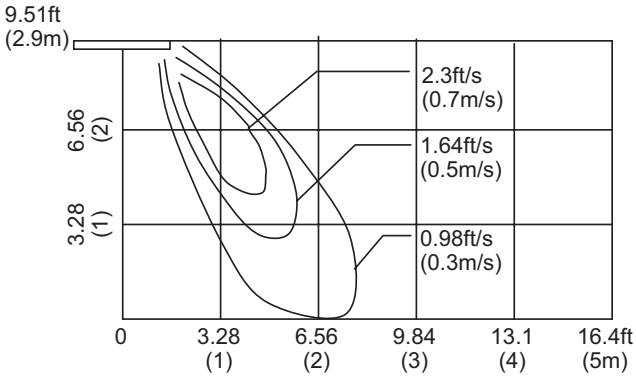


### MMU-AP0181MH2UL

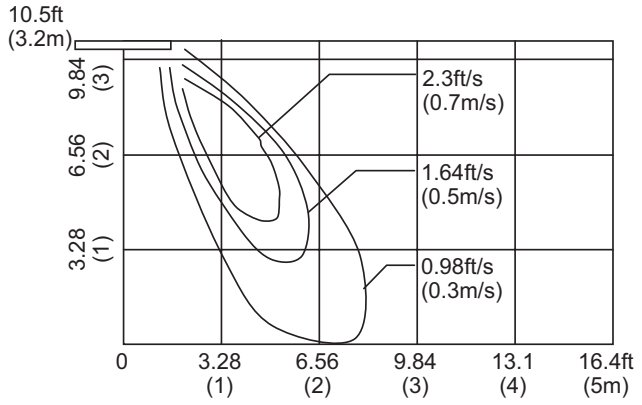


### MMU-AP0151MH2UL/AP0181MH2UL

**(High ceiling mode)**

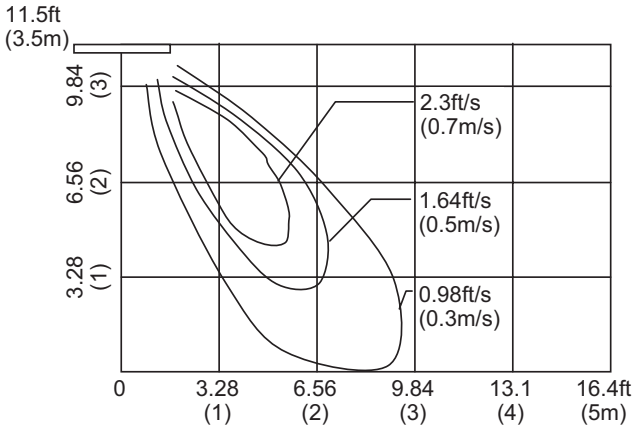

## 8. Sound characteristics (NC-Curve)

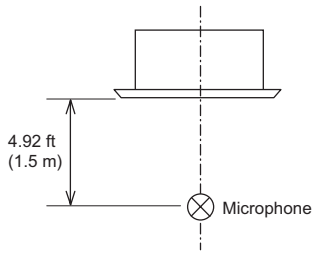


**MMU-AP0071MH2UL**

| Sound pressure level (dB (A)) | H - M - L |
|---|---|
| | 38.5-35-31 |

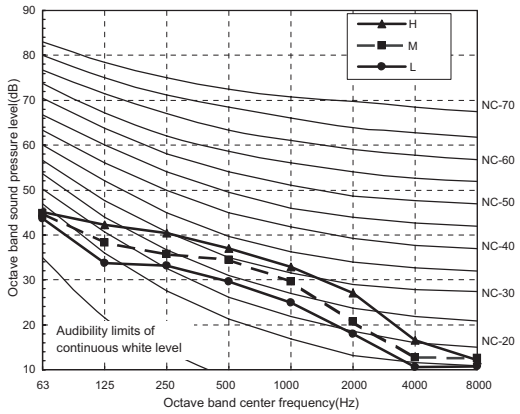


**MMU-AP0091MH2UL**

| Sound pressure level (dB (A)) | H - M - L |
|---|---|
| | 40-35.5-31 |

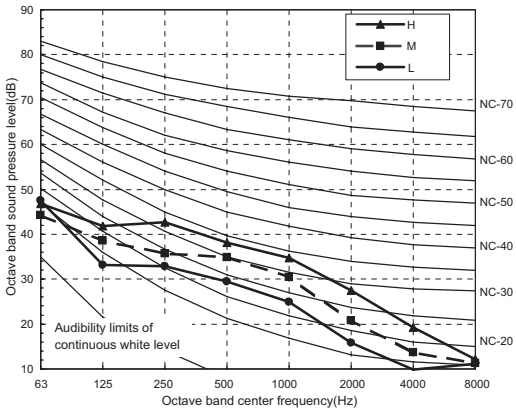


**MMU-AP0121MH2UL**

| Sound pressure level (dB (A)) | H - M - L |
|---|---|
| | 40-36-32 |

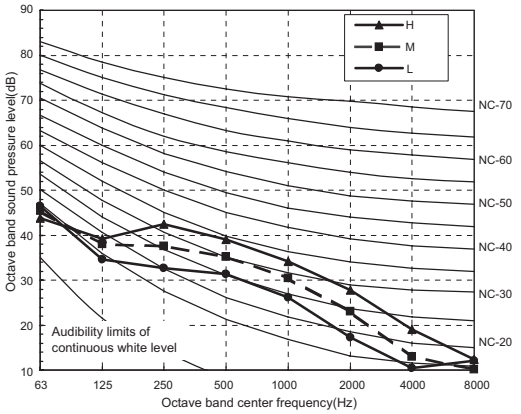


**MMU-AP0151MH2UL**

| Sound pressure level (dB (A)) | H - M - L |
|---|---|
| | 42.5-37.5-33 |

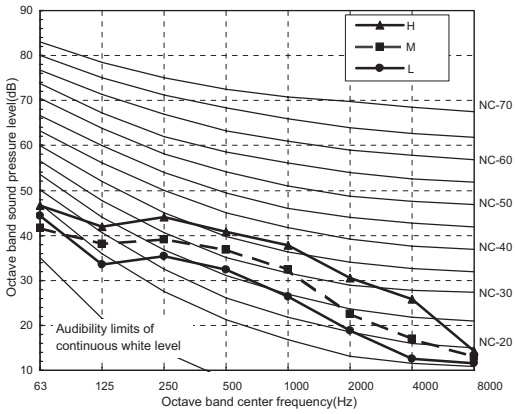


**MMU-AP0181MH2UL**

| Sound pressure level (dB (A)) | H - M - L |
|---|---|
| | 46.5-41.5-36 |

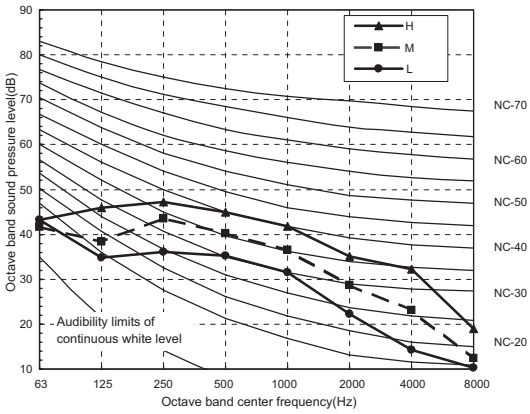

## 9. Accessory

**Optional part for Compact 4-Way Cassette type**

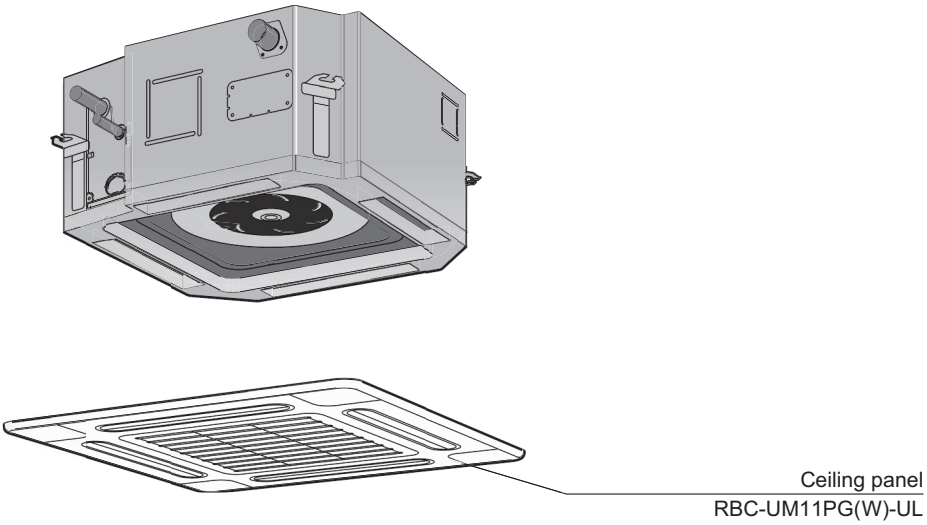


| Parts Name | Model name | Applied Model | Note |
|---|---|---|---|
| Ceiling panel | RBC-UM11PG(W)-UL | MMU-AP****MH2UL | Required accessory |

6-2-3. Ceiling type

# Ceiling type

**MMC-AP0181H2UL**

**MMC-AP0241H2UL**

**MMC-AP0361H2UL**

**MMU-AP0421H2UL**

## Contents

1. Specifications
2. Dimensions
3. Wiring diagram
4. Center of Gravity
5. Electrical current characteristics
6. Sensible capacity table
7. Air throw distance chart
8. Sound characteristics (NC-Curve)
9. Accessories

# 1. Specifications

## Ceiling type

| Model name | | | MMC- | AP0181H2UL | AP0241H2UL | AP0361H2UL | AP0421H2UL |
|---|---|---|---|---|---|---|---|
| Cooling Capacity | | | kBtu/h | 18 | 24 | 36 | 42 |
| Heating Capacity | | | kBtu/h | 20 | 27 | 40 | 47.5 |
| Electrical charastaristics | Power supply | | | 230V(208/230V) 1phase 60Hz | | | |
| | Power consumption | | kW | 0.038 | 0.05 | 0.091 | 0.11 |
| Appearance | | | | White (Munsell 10Y 9.3/0.4) | | | |
| Dimension | Unit | Height | In | 8.3 | 8.3 | 8.3 | 8.3 |
| | | Width | In | 35.8 | 46.5 | 62.8 | 62.8 |
| | | Depth | In | 26.8 | 26.8 | 26.8 | 26.8 |
| | Packing | Height | In | 12.4 | 12.4 | 12.4 | 12.4 |
| | | Width | In | 39.1 | 50.0 | 66 | 66 |
| | | Depth | In | 32.0 | 32.0 | 32.0 | 32.0 |
| Total weight | Unit | | lb | 46 | 57 | 75 | 75 |
| | Packed unit | | lb | 62 | 75 | 97 | 97 |
| Heat exchanger | | | | Finned tube | | | |
| Fan unit | Fan | | | Centrifugal fan | | | |
| | Standard air flow(High/Mid/Low) | | cfm | 410/360/320 | 590/530/470 | 880/770/680 | 950/820/730 |
| | Motor | | W | 60 | 60 | 60 | 60 |
| Air filter | | | | Standard filter ( Long life filter) | | | |
| Connecting pipe | Gas side | | In | 1/2" | 5/8" | 5/8" | 5/8" |
| | Liquid side | | In | 1/4" | 3/8" | 3/8" | 3/8" |
| | Drain port (Nominal dia.) | | In | VP20(Polyvinyl chloride tube: External Dia.1 Internal Dia.0.79) | | | |
| Sound puressure level (High/Mid/Low) (*1) | | | dB(A) | 38.5/35/32.5 | 40.5/38/35 | 44/41/37 | 46/42.5/39.5 |
| Option parts | Drain Pump Kit | | | TCB-DP22CUL | | | |
| | Elbow Piping Kit | | | TCB-KP12CUL | | | |
| | | | | TCB-KP22CUL | | | |

Note

(*1) The actual values in an external operating environment are generally higher than the indicated values due to the contribution from ambient noise.

## 2. Dimensions

MMC-AP0181H2UL

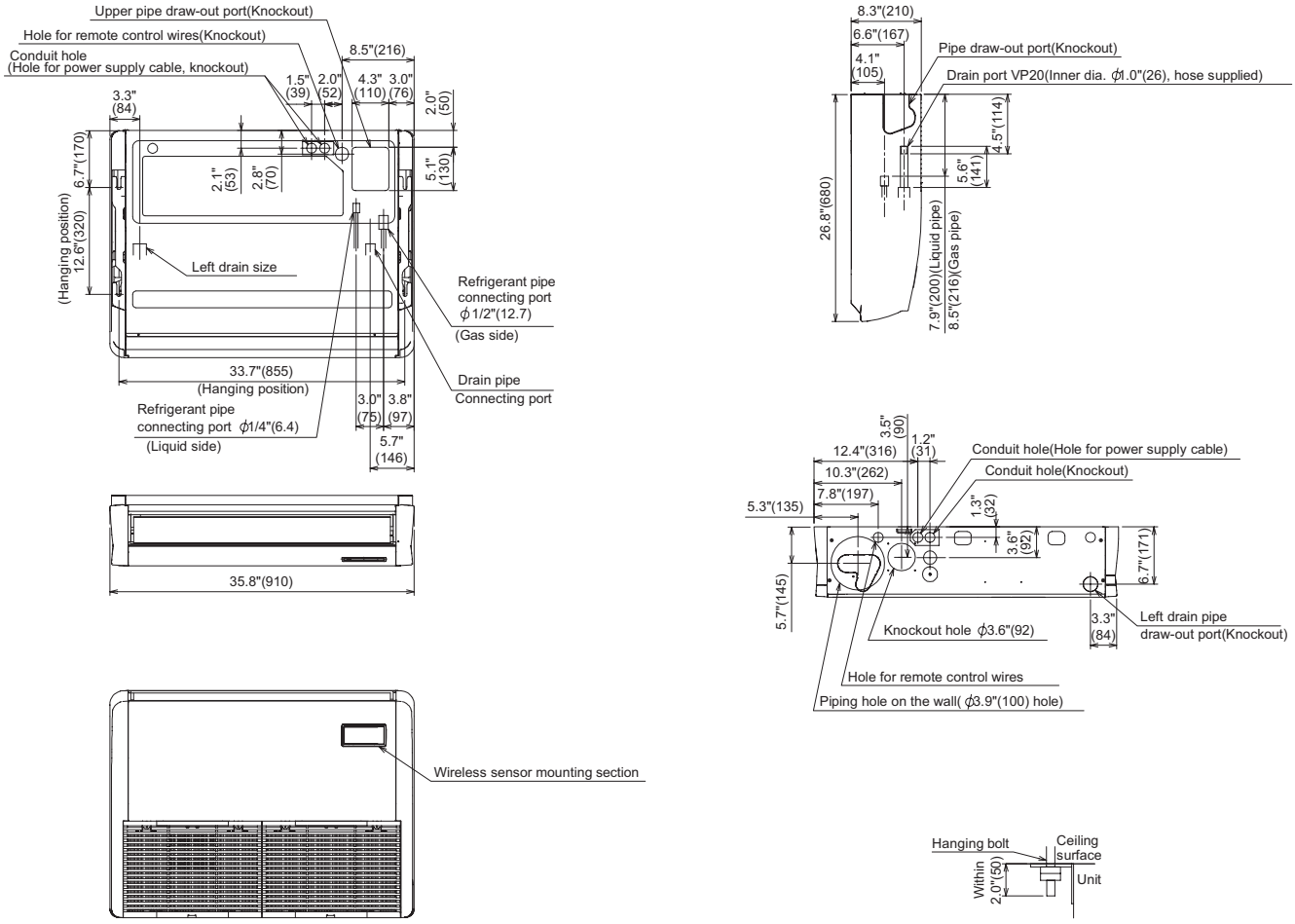


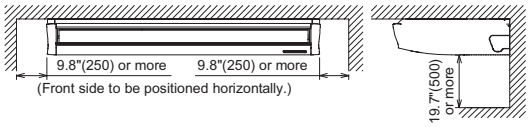


Space required for installation and servicing

Unit:in(mm)

MMC-AP0241H2UL

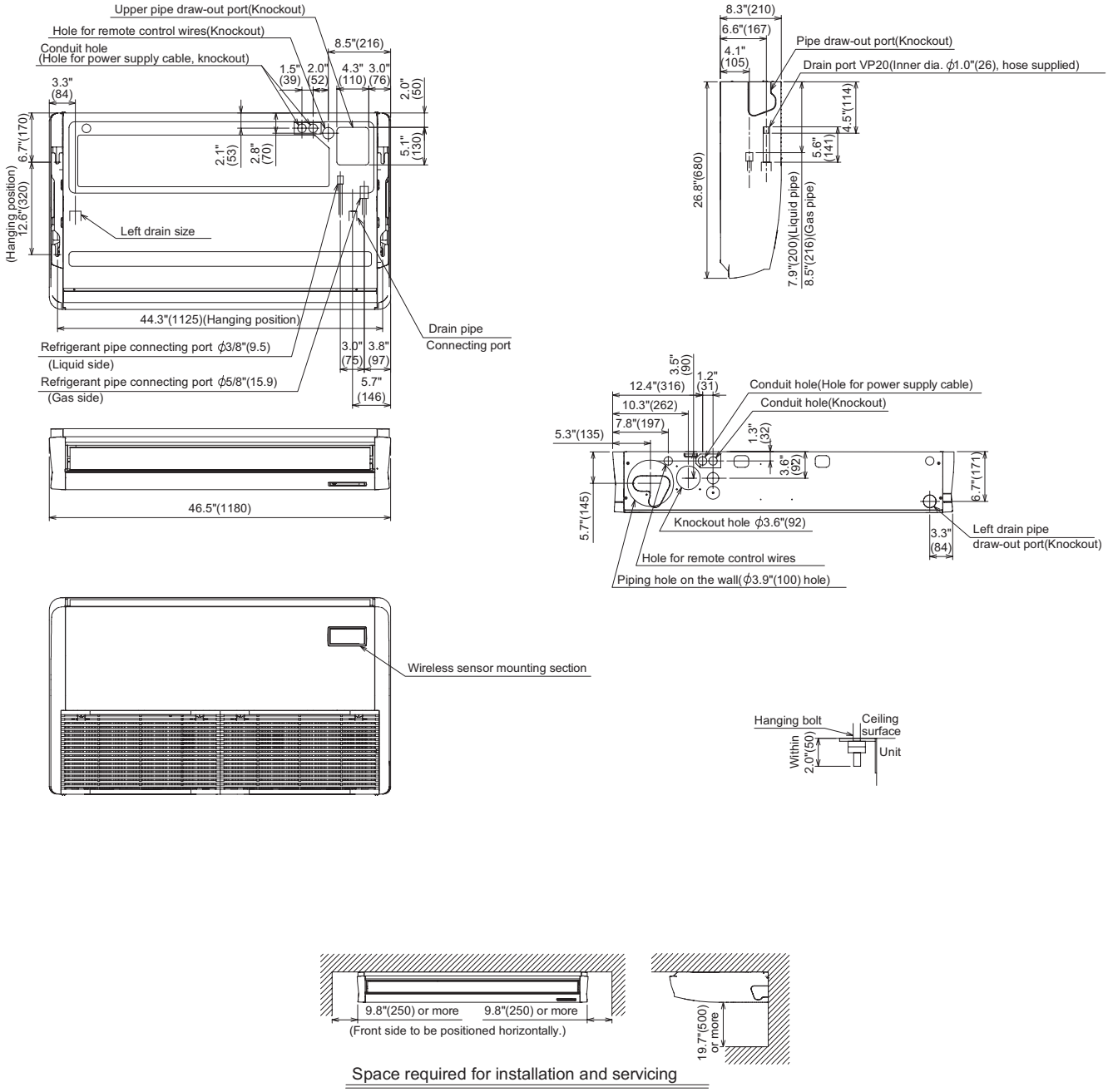


Space required for installation and servicing

Unit:in(mm)

MMC-AP0361H2UL, AP0421H2UL

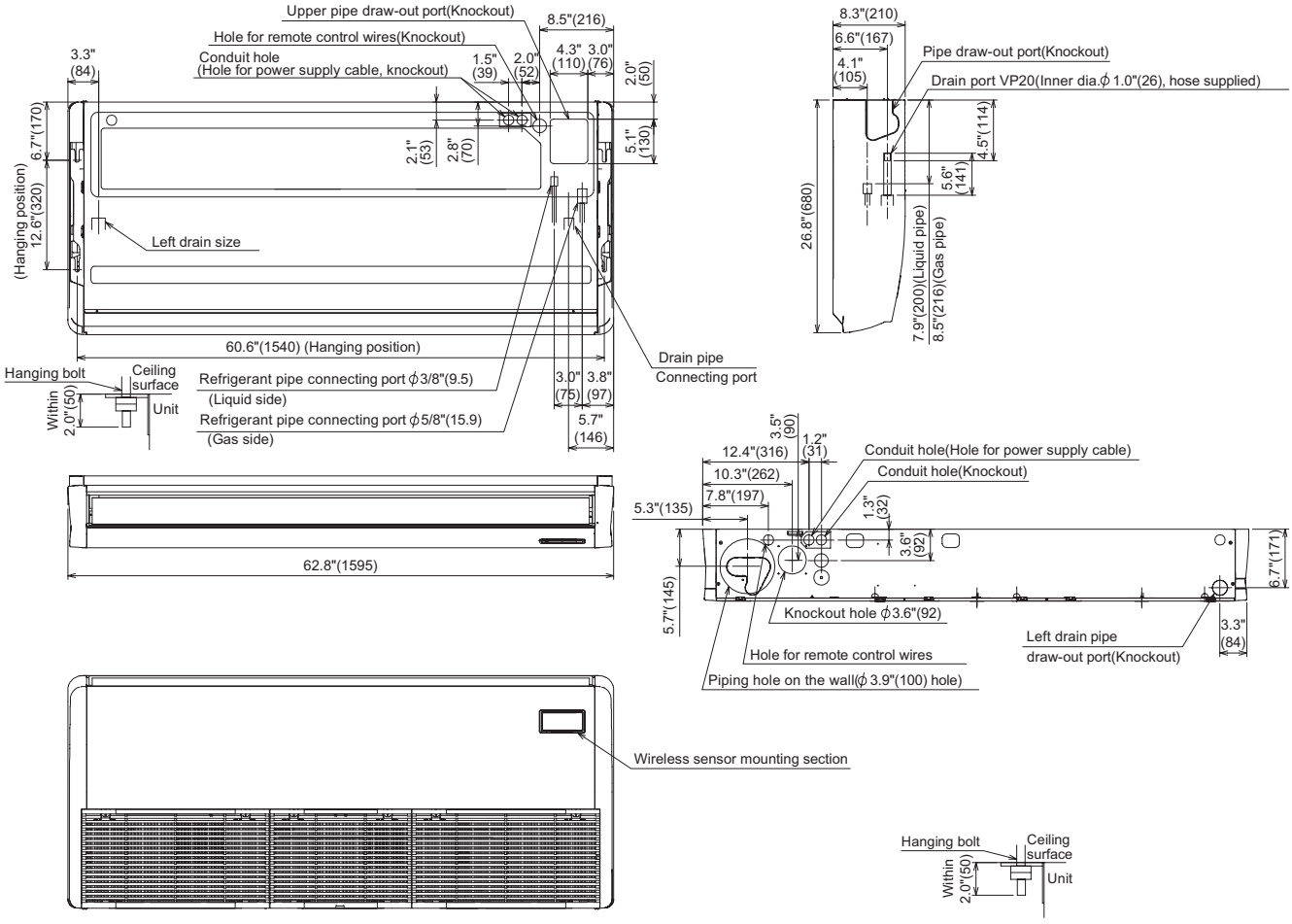


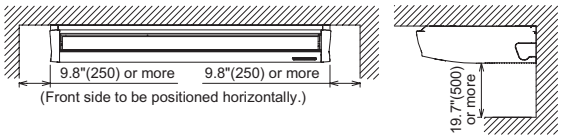


Space required for installation and servicing

Unit:in(mm)

## 3. Wiring diagram

MMC-AP0181H2UL, AP0241H2UL, AP0361H2UL, AP0421H2UL

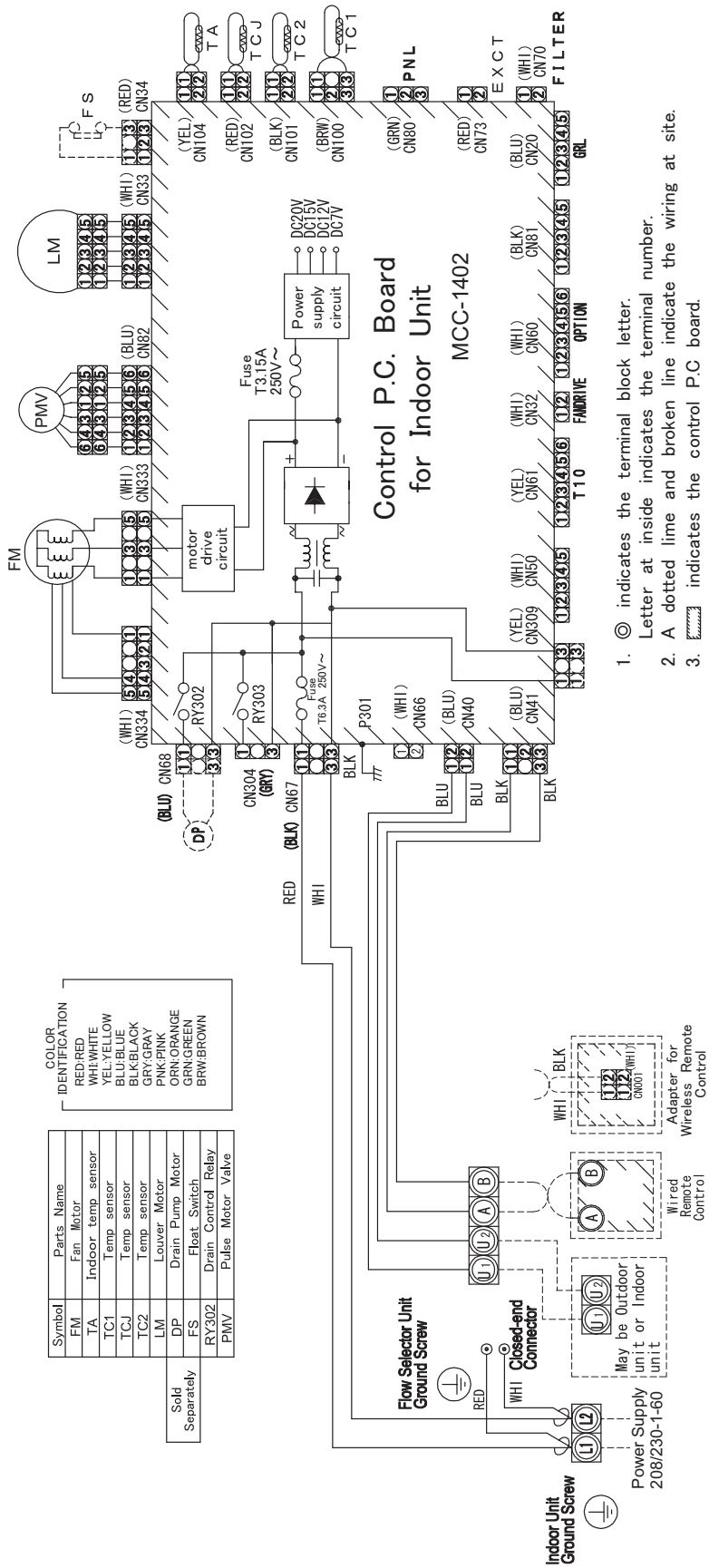

## 4. Center of Gravity

| Model name | X (In) | Y (In) | Z (In) | Total weight (lb) |
|---|---|---|---|---|
| MMC-AP0181H2UL | 12.6 | 18.1 | 3.55 | 46 |
| MMC-AP0241H2UL | | 22.4 | | 57 |
| MMC-AP0361H2UL | | 30.3 | | 75 |
| MMC-AP0421H2UL | | | | |

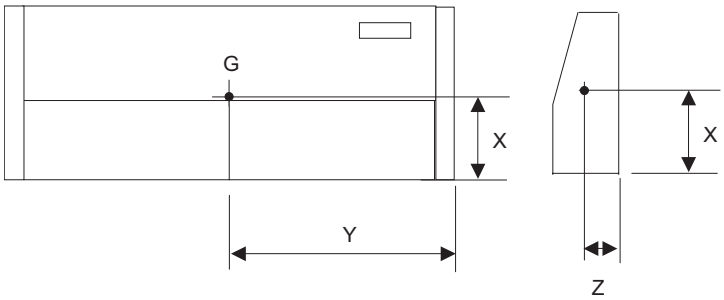


## 5. Electrical current characteristics

| Type | Model | Nominal Voltage (V-Ph-Hz) | Voltage Range (V) | | Power consumption | FLA | MCA | MOCP |
|---|---|---|---|---|---|---|---|---|
| | | | Min | Max | kW | A | A | A |
| Ceiling type | MMC-AP0181H2UL | 208/230-1-60 | 187 | 253 | 0.038 | 0.4 | 0.5 | 15 |
| | MMC-AP0241H2UL | 208/230-1-60 | 187 | 253 | 0.05 | 0.5 | 0.7 | 15 |
| | MMC-AP0361H2UL | 208/230-1-60 | 187 | 253 | 0.091 | 0.8 | 1.0 | 15 |
| | MMC-AP0421H2UL | 208/230-1-60 | 187 | 253 | 0.11 | 0.9 | 1.2 | 15 |

MCA : Minimum Circuit Amps
FLA : Full Load Amps
MOCP : Maximum Overcurrent Protection (Amps)

## 6. Sensible capacity table

Ceiling type (MMC-AP***1H2UL)

TC: Total capacity [Btu/h] SHC: Sensible capacity [Btu/h]

| unit size | outdoor air temp. °FDB | indoor air temp. | | | | | | | | | | | | | |
|---|---|---|---|---|---|---|---|---|---|---|---|---|---|---|---|
| | | 59°FWB | | 61°FWB | | 64°FWB | | 67°FWB | | 68°FWB | | 72°FWB | | 75°FWB | |
| | | 71°FDB | | 73°FDB | | 77°FDB | | 80°FDB | | 82°FDB | | 86°FDB | | 90°FDB | |
| | | TC | SHC | TC | SHC | TC | SHC | TC | SHC | TC | SHC | TC | SHC | TC | SHC |
| 018 | 50 | 15320 | 11370 | 16030 | 11680 | 17040 | 12150 | 18000 | 12540 | 18310 | 12580 | 19470 | 12420 | 20270 | 11950 |
| | 54 | 15320 | 11370 | 16030 | 11680 | 17040 | 12150 | 18000 | 12540 | 18310 | 12580 | 19470 | 12420 | 20270 | 11950 |
| | 57 | 15320 | 11370 | 16030 | 11680 | 17040 | 12150 | 18000 | 12540 | 18310 | 12580 | 19470 | 12420 | 20270 | 11950 |
| | 61 | 15320 | 11370 | 16030 | 11680 | 17040 | 12150 | 18000 | 12540 | 18310 | 12580 | 19470 | 12420 | 20270 | 11950 |
| | 64 | 15320 | 11370 | 16030 | 11680 | 17040 | 12150 | 18000 | 12540 | 18310 | 12580 | 19470 | 12420 | 20270 | 11950 |
| | 68 | 15320 | 11370 | 16030 | 11680 | 17040 | 12150 | 18000 | 12540 | 18310 | 12580 | 19470 | 12420 | 20270 | 11950 |
| | 70 | 15320 | 11370 | 16030 | 11680 | 17040 | 12150 | 18000 | 12540 | 18310 | 12580 | 19470 | 12420 | 20270 | 11950 |
| | 73 | 15320 | 11370 | 16030 | 11680 | 17040 | 12150 | 18000 | 12540 | 18310 | 12580 | 19470 | 12420 | 20270 | 11950 |
| | 77 | 15320 | 11370 | 16030 | 11680 | 17040 | 12150 | 18000 | 12540 | 18310 | 12580 | 19470 | 12420 | 20270 | 11950 |
| | 81 | 15320 | 11370 | 16030 | 11680 | 17040 | 12150 | 18000 | 12540 | 18310 | 12580 | 19470 | 12420 | 20270 | 11950 |
| | 84 | 15320 | 11370 | 16030 | 11680 | 17040 | 12150 | 18000 | 12540 | 18310 | 12580 | 19470 | 12420 | 20270 | 11950 |
| | 88 | 15320 | 11370 | 16030 | 11680 | 17040 | 12150 | 18000 | 12540 | 18310 | 12580 | 19470 | 12420 | 20270 | 11950 |
| | 91 | 15320 | 11370 | 16030 | 11680 | 17040 | 12150 | 18000 | 12540 | 18310 | 12580 | 19470 | 12420 | 20270 | 11950 |
| | 95 | 15320 | 11370 | 16030 | 11680 | 17040 | 12150 | 18000 | 12540 | 18310 | 12580 | 19470 | 12420 | 20270 | 11950 |
| | 99 | 14880 | 11040 | 15570 | 11340 | 16550 | 11800 | 17480 | 12180 | 17780 | 12220 | 18910 | 12060 | 19680 | 11600 |
| | 102 | 14520 | 10780 | 15200 | 11070 | 16150 | 11520 | 17060 | 11890 | 17360 | 11930 | 18460 | 11770 | 19220 | 11330 |
| 024 | 50 | 20430 | 15630 | 21370 | 16060 | 22730 | 16720 | 24000 | 17240 | 24410 | 17290 | 25960 | 17070 | 27020 | 16430 |
| | 54 | 20430 | 15630 | 21370 | 16060 | 22730 | 16720 | 24000 | 17240 | 24410 | 17290 | 25960 | 17070 | 27020 | 16430 |
| | 57 | 20430 | 15630 | 21370 | 16060 | 22730 | 16720 | 24000 | 17240 | 24410 | 17290 | 25960 | 17070 | 27020 | 16430 |
| | 61 | 20430 | 15630 | 21370 | 16060 | 22730 | 16720 | 24000 | 17240 | 24410 | 17290 | 25960 | 17070 | 27020 | 16430 |
| | 64 | 20430 | 15630 | 21370 | 16060 | 22730 | 16720 | 24000 | 17240 | 24410 | 17290 | 25960 | 17070 | 27020 | 16430 |
| | 68 | 20430 | 15630 | 21370 | 16060 | 22730 | 16720 | 24000 | 17240 | 24410 | 17290 | 25960 | 17070 | 27020 | 16430 |
| | 70 | 20430 | 15630 | 21370 | 16060 | 22730 | 16720 | 24000 | 17240 | 24410 | 17290 | 25960 | 17070 | 27020 | 16430 |
| | 73 | 20430 | 15630 | 21370 | 16060 | 22730 | 16720 | 24000 | 17240 | 24410 | 17290 | 25960 | 17070 | 27020 | 16430 |
| | 77 | 20430 | 15630 | 21370 | 16060 | 22730 | 16720 | 24000 | 17240 | 24410 | 17290 | 25960 | 17070 | 27020 | 16430 |
| | 81 | 20430 | 15630 | 21370 | 16060 | 22730 | 16720 | 24000 | 17240 | 24410 | 17290 | 25960 | 17070 | 27020 | 16430 |
| | 84 | 20430 | 15630 | 21370 | 16060 | 22730 | 16720 | 24000 | 17240 | 24410 | 17290 | 25960 | 17070 | 27020 | 16430 |
| | 88 | 20430 | 15630 | 21370 | 16060 | 22730 | 16720 | 24000 | 17240 | 24410 | 17290 | 25960 | 17070 | 27020 | 16430 |
| | 91 | 20430 | 15630 | 21370 | 16060 | 22730 | 16720 | 24000 | 17240 | 24410 | 17290 | 25960 | 17070 | 27020 | 16430 |
| | 95 | 20430 | 15630 | 21370 | 16060 | 22730 | 16720 | 24000 | 17240 | 24410 | 17290 | 25960 | 17070 | 27020 | 16430 |
| | 99 | 19840 | 15180 | 20750 | 15590 | 22070 | 16240 | 23300 | 16740 | 23700 | 16790 | 25210 | 16570 | 26240 | 15950 |
| | 102 | 19370 | 14820 | 20260 | 15220 | 21550 | 15850 | 22750 | 16340 | 23140 | 16390 | 24610 | 16180 | 25610 | 15580 |
| 036 | 50 | 30640 | 22150 | 32060 | 22760 | 34090 | 23690 | 36000 | 24430 | 36620 | 24500 | 38930 | 24180 | 40540 | 23280 |
| | 54 | 30640 | 22150 | 32060 | 22760 | 34090 | 23690 | 36000 | 24430 | 36620 | 24500 | 38930 | 24180 | 40540 | 23280 |
| | 57 | 30640 | 22150 | 32060 | 22760 | 34090 | 23690 | 36000 | 24430 | 36620 | 24500 | 38930 | 24180 | 40540 | 23280 |
| | 61 | 30640 | 22150 | 32060 | 22760 | 34090 | 23690 | 36000 | 24430 | 36620 | 24500 | 38930 | 24180 | 40540 | 23280 |
| | 64 | 30640 | 22150 | 32060 | 22760 | 34090 | 23690 | 36000 | 24430 | 36620 | 24500 | 38930 | 24180 | 40540 | 23280 |
| | 68 | 30640 | 22150 | 32060 | 22760 | 34090 | 23690 | 36000 | 24430 | 36620 | 24500 | 38930 | 24180 | 40540 | 23280 |
| | 70 | 30640 | 22150 | 32060 | 22760 | 34090 | 23690 | 36000 | 24430 | 36620 | 24500 | 38930 | 24180 | 40540 | 23280 |
| | 73 | 30640 | 22150 | 32060 | 22760 | 34090 | 23690 | 36000 | 24430 | 36620 | 24500 | 38930 | 24180 | 40540 | 23280 |
| | 77 | 30640 | 22150 | 32060 | 22760 | 34090 | 23690 | 36000 | 24430 | 36620 | 24500 | 38930 | 24180 | 40540 | 23280 |
| | 81 | 30640 | 22150 | 32060 | 22760 | 34090 | 23690 | 36000 | 24430 | 36620 | 24500 | 38930 | 24180 | 40540 | 23280 |
| | 84 | 30640 | 22150 | 32060 | 22760 | 34090 | 23690 | 36000 | 24430 | 36620 | 24500 | 38930 | 24180 | 40540 | 23280 |
| | 88 | 30640 | 22150 | 32060 | 22760 | 34090 | 23690 | 36000 | 24430 | 36620 | 24500 | 38930 | 24180 | 40540 | 23280 |
| | 91 | 30640 | 22150 | 32060 | 22760 | 34090 | 23690 | 36000 | 24430 | 36620 | 24500 | 38930 | 24180 | 40540 | 23280 |
| | 95 | 30640 | 22150 | 32060 | 22760 | 34090 | 23690 | 36000 | 24430 | 36620 | 24500 | 38930 | 24180 | 40540 | 23280 |
| | 99 | 29750 | 21510 | 31130 | 22100 | 33100 | 23000 | 34960 | 23720 | 35560 | 23790 | 37800 | 23480 | 39360 | 22600 |
| | 102 | 29050 | 21000 | 30390 | 21580 | 32320 | 22460 | 34130 | 23160 | 34720 | 23230 | 36910 | 22920 | 38430 | 22070 |
| 042 | 50 | 35750 | 26660 | 37400 | 27380 | 39770 | 28500 | 42000 | 29400 | 42720 | 29480 | 45420 | 29100 | 47290 | 28020 |
| | 54 | 35750 | 26660 | 37400 | 27380 | 39770 | 28500 | 42000 | 29400 | 42720 | 29480 | 45420 | 29100 | 47290 | 28020 |
| | 57 | 35750 | 26660 | 37400 | 27380 | 39770 | 28500 | 42000 | 29400 | 42720 | 29480 | 45420 | 29100 | 47290 | 28020 |
| | 61 | 35750 | 26660 | 37400 | 27380 | 39770 | 28500 | 42000 | 29400 | 42720 | 29480 | 45420 | 29100 | 47290 | 28020 |
| | 64 | 35750 | 26660 | 37400 | 27380 | 39770 | 28500 | 42000 | 29400 | 42720 | 29480 | 45420 | 29100 | 47290 | 28020 |
| | 68 | 35750 | 26660 | 37400 | 27380 | 39770 | 28500 | 42000 | 29400 | 42720 | 29480 | 45420 | 29100 | 47290 | 28020 |
| | 70 | 35750 | 26660 | 37400 | 27380 | 39770 | 28500 | 42000 | 29400 | 42720 | 29480 | 45420 | 29100 | 47290 | 28020 |
| | 73 | 35750 | 26660 | 37400 | 27380 | 39770 | 28500 | 42000 | 29400 | 42720 | 29480 | 45420 | 29100 | 47290 | 28020 |
| | 77 | 35750 | 26660 | 37400 | 27380 | 39770 | 28500 | 42000 | 29400 | 42720 | 29480 | 45420 | 29100 | 47290 | 28020 |
| | 81 | 35750 | 26660 | 37400 | 27380 | 39770 | 28500 | 42000 | 29400 | 42720 | 29480 | 45420 | 29100 | 47290 | 28020 |
| | 84 | 35750 | 26660 | 37400 | 27380 | 39770 | 28500 | 42000 | 29400 | 42720 | 29480 | 45420 | 29100 | 47290 | 28020 |
| | 88 | 35750 | 26660 | 37400 | 27380 | 39770 | 28500 | 42000 | 29400 | 42720 | 29480 | 45420 | 29100 | 47290 | 28020 |
| | 91 | 35750 | 26660 | 37400 | 27380 | 39770 | 28500 | 42000 | 29400 | 42720 | 29480 | 45420 | 29100 | 47290 | 28020 |
| | 95 | 35750 | 26660 | 37400 | 27380 | 39770 | 28500 | 42000 | 29400 | 42720 | 29480 | 45420 | 29100 | 47290 | 28020 |
| | 99 | 34710 | 25890 | 36320 | 26590 | 38620 | 27670 | 40780 | 28550 | 41480 | 28630 | 44100 | 28260 | 45920 | 27210 |
| | 102 | 33890 | 25270 | 35460 | 25960 | 37700 | 27020 | 39820 | 27870 | 40500 | 27950 | 43060 | 27590 | 44830 | 26560 |

## 7. Air throw distance chart

MMC-AP0181H2UL/AP0421H2UL

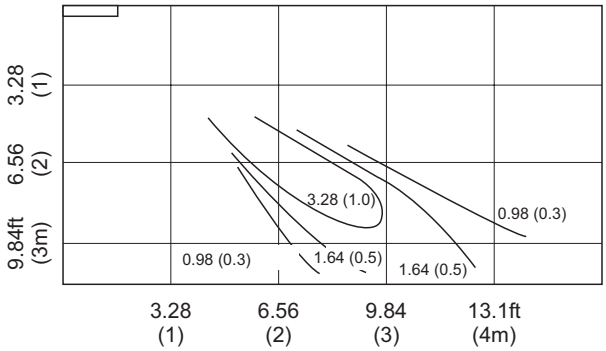


MMC-AP0361H2UL

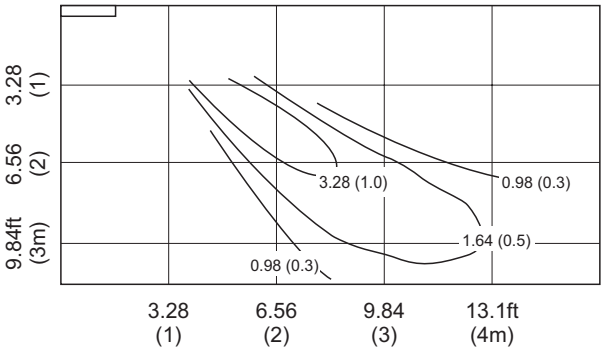


MMC-AP0241H2UL

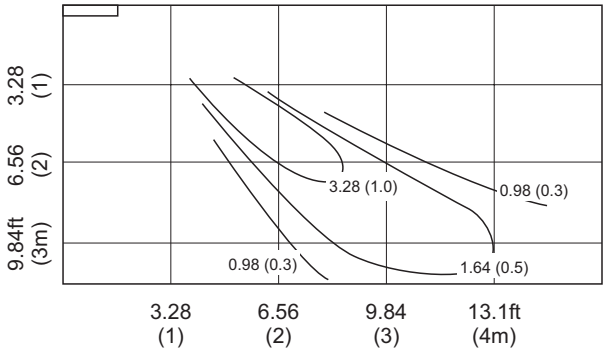


unit : [ft/s (m/s)]

## 8. Sound characteristics (NC-Curve)

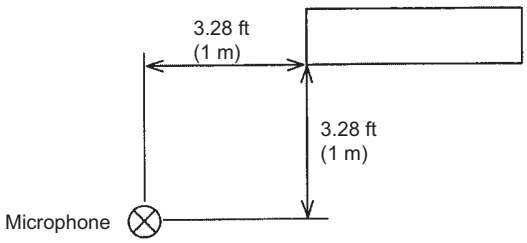


**MMC-AP0181H2UL**

| Sound pressure level (dB (A)) | H - M - L |
|---|---|
| | 38.5-35-32.5 |

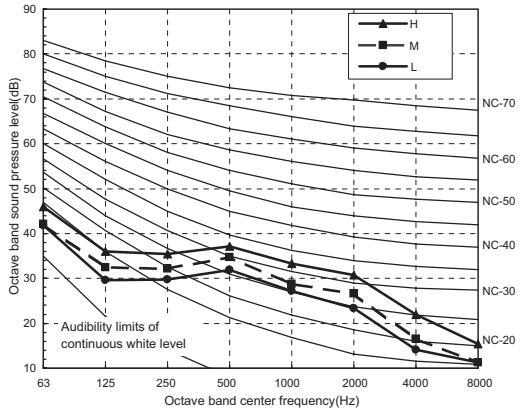


**MMC-AP0241H2UL**

| Sound pressure level (dB (A)) | H - M - L |
|---|---|
| | 40.5-38-35 |

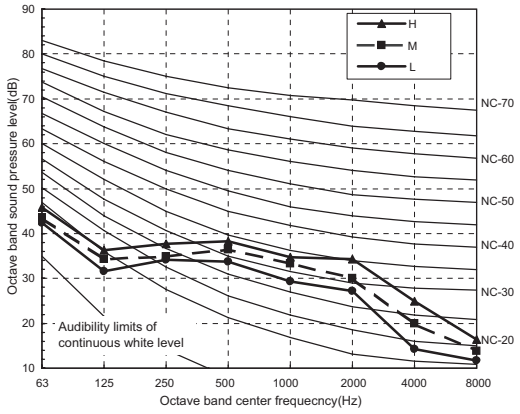


**MMC-AP0361H2UL**

| Sound pressure level (dB (A)) | H - M - L |
|---|---|
| | 44-41-37 |

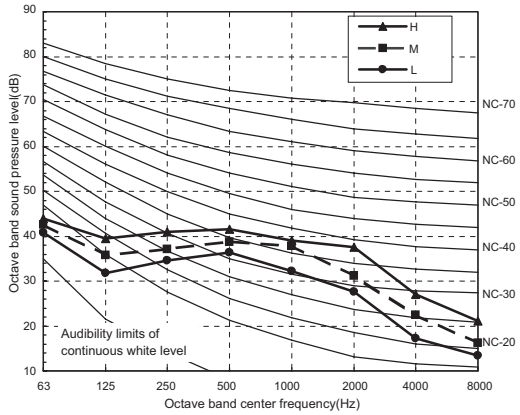


**MMC-AP0421H2UL**

| Sound pressure level (dB (A)) | H - M - L |
|---|---|
| | 46-42.5-39.5 |

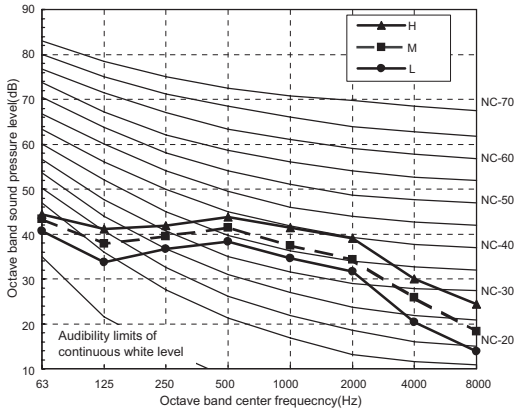

## 9. Accessories

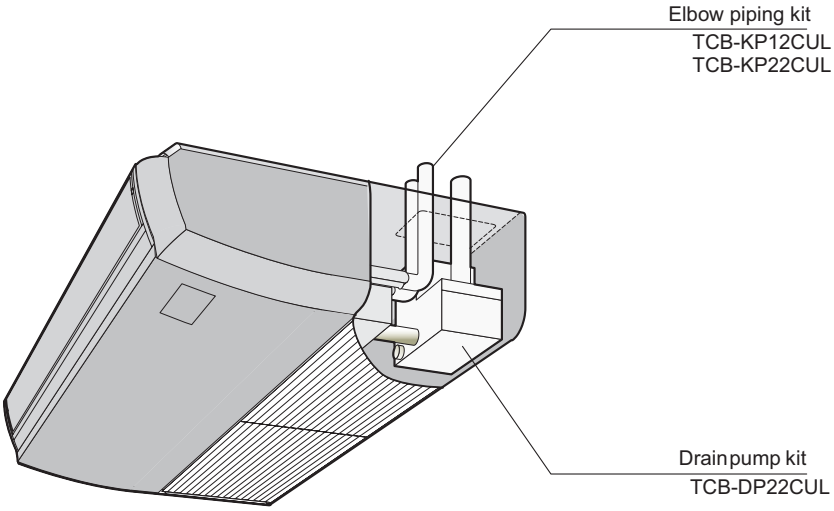


| Parts Name | Model name | Applied Model | Notes | Remarks |
|---|---|---|---|---|
| Drain pump kit | TCB-DP22CUL | MMC-AP****H2UL | Stand-up 600 or less (from bottom face of ceiling) | Use with TCB-KP12CUL and TCB-KP22CUL |
| Elbow piping kit | TCB-KP12CUL | MMC-AP0181H2UL | Needed when drain pump kit is used | |
| | TCB-KP22CUL | MMC-AP0241 to 0421H2UL | | |

6-2-4. High Wall type

# High Wall type

**MMK-AP0073H2UL**
**MMK-AP0093H2UL**
**MMK-AP0123H2UL**
**MMK-AP0153H2UL**
**MMK-AP0183H2UL**
**MMK-AP0243H2UL**

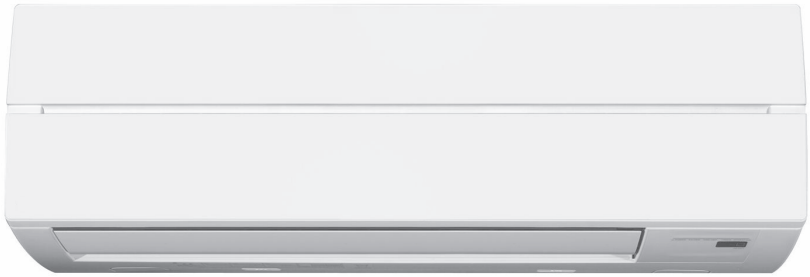

## Contents

1. Specifications
2. Dimension
3. Wiring diagram
4. Center of Gravity
5. Electrical current characteristics
6. Sensible capacity table
7. Fan characteristics
8. Sound characteristics (NC-Curve)
9. Accessory

# 1. Specifications

## High Wall type

| Model name | | | | MMK- | AP0073H2UL | AP0093H2UL | AP0123H2UL | AP0153H2UL | AP0183H2UL | AP0243H2UL |
|---|---|---|---|---|---|---|---|---|---|---|
| Cooling Capacity | | | | kBtu/h | 7.5 | 9.5 | 12 | 15.4 | 18 | 24 |
| Heating Capacity | | | | kBtu/h | 8.5 | 10.5 | 13.5 | 17 | 20 | 27 |
| Electrical charastaristics | Power supply | | | | 230V(208/230V) 1phase 60Hz | | | | | |
| | Power consumption | | | kW | 0.018 | 0.021 | 0.021 | 0.043 | 0.043 | 0.05 |
| Appearance | Suction grille and side panel | | | | Moon white (Munsell 2.5GY9.0/0.5) | | | | | |
| | Discharge-grille | | | | Moon white (Munsell 2.5GY9.0/0.5) | | | | | |
| | Bottom surface | | | | Moon white (Munsell 2.5GY9.0/0.5) | | | | | |
| Dimension | Unit | Height | | In | 12.6 | 12.6 | 12.6 | 12.6 | 12.6 | 12.6 |
| | | Width | | In | 41.3 | 41.3 | 41.3 | 41.3 | 41.3 | 41.3 |
| | | Depth | | In | 9.0 | 9.0 | 9.0 | 9.0 | 9.0 | 9.0 |
| | Packing | Height | | In | 15.7 | 15.7 | 15.7 | 15.7 | 15.7 | 15.7 |
| | | Width | | In | 43.9 | 43.9 | 43.9 | 43.9 | 43.9 | 43.9 |
| | | Depth | | In | 11.9 | 11.9 | 11.9 | 11.9 | 11.9 | 11.9 |
| Total weight | Unit | | | lb | 33 | 33 | 33 | 33 | 33 | 33 |
| | Packed unit | | | lb | 42 | 42 | 42 | 42 | 42 | 42 |
| Heat exchanger | | | | | Finned tube | | | | | |
| Fan unit | Fan | | | | Cross-flow fan | | | | | |
| | Standard air flow(High/Mid/Low) | | | cfm | 340/270/230 | 350/280/230 | 350/280/230 | 490/390/320 | 490/390/320 | 600/440/340 |
| | Motor | | | W | 30 | 30 | 30 | 30 | 30 | 30 |
| Air filter | | | | | Standard filter attached | | | | | |
| Connecting pipe | Gas side | | | In | 3/8" | 3/8" | 3/8" | 1/2" | 1/2" | 5/8" |
| | Liquid side | | | In | 1/4" | 1/4" | 1/4" | 1/4" | 1/4" | 3/8" |
| | Drain port (Nominal dia.) | | | In | VP16(Polyvinyl chloride tube: External Dia.0.87 Internal Dia.0.63) | | | | | |
| Sound puressure level (High/Mid/Low) (*1) | | | | dB(A) | 36/32.5/30 | 39/34/30 | 39/34/30 | 43/38/34.5 | 43/38/34.5 | 47.5/40.5/35 |

Note

(*1) The actual values in an external operating environment are generally higher than the indicated values due to the contribution from ambient noise.

## 2. Dimension

MMK-AP0073H2UL, AP0093H2UL, AP0123H2UL, AP0153H2UL, AP0183H2UL, AP0243H2UL

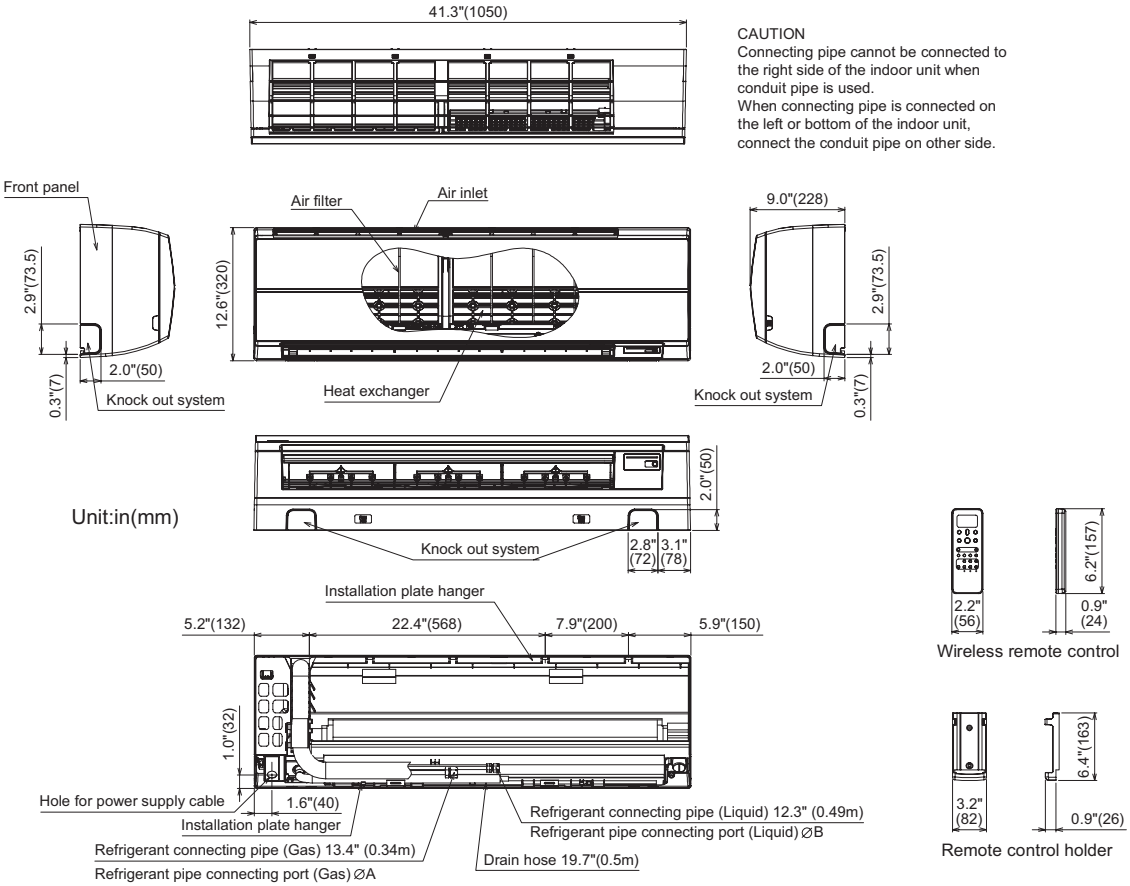


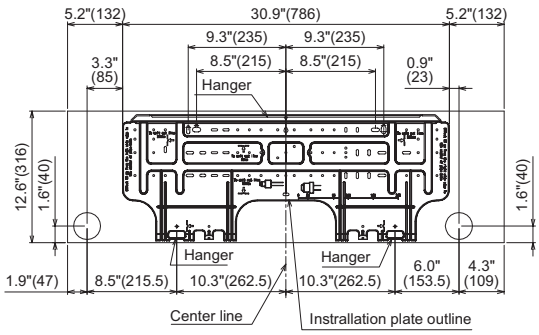


Installation plate

Space required for installation and servicing

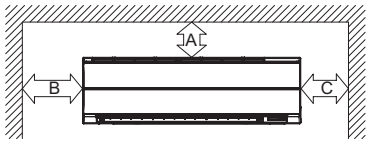


| | Distance | Comments |
|---|---|---|
| A | 2.0"(50) or more | |
| B | 33.5"(850) or more | For exchange of cross flow fan |
| C | 6.7"(170) or more | |

Unit:in(mm)

| Model MMK- | A | B |
|---|---|---|
| AP007, 009, 012 Type | 3/8" (9.5) | 1/4" (6.4) |
| AP015, 018 Type | 1/2" (12.7) | 1/4" (6.4) |
| AP024 Type | 5/8" (15.9) | 3/8" (9.5) |

## 3. Wiring diagram

MMK-AP0073H2UL, AP0093H2UL, AP0123H2UL, AP0153H2UL, AP0183H2UL, AP0243H2UL

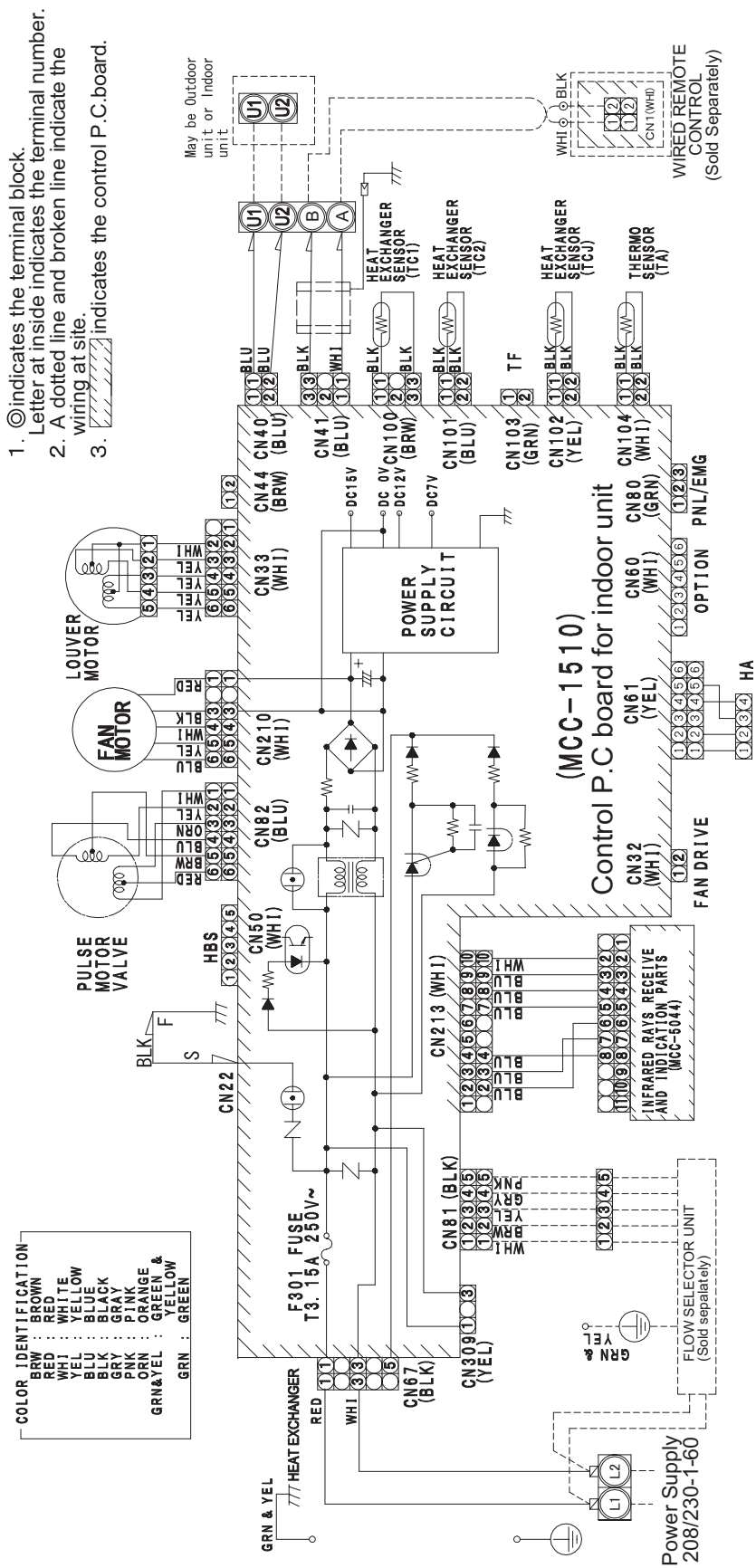

## 4. Center of Gravity

| Model name | X (In) | Y (In) | Z (In) |
|---|---|---|---|
| MMK-AP0073H2UL | 17.5 | 4.15 | 6.7 |
| MMK-AP0093H2UL | | | |
| MMK-AP0123H2UL | | | |
| MMK-AP0153H2UL | | | |
| MMK-AP0183H2UL | | | |
| MMK-AP0243H2UL | | | |

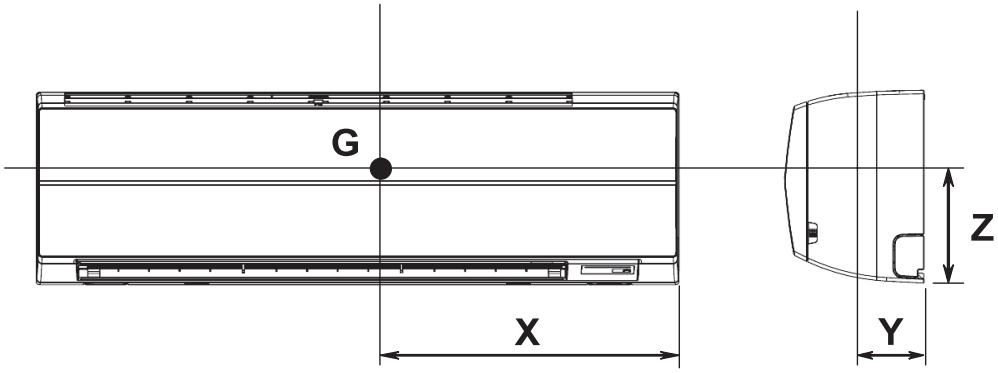


## 5. Electrical current characteristics

| Type | Model | Nominal Voltage (V-Ph-Hz) | Voltage Range (V) | | Power consumption | FLA | MCA | MOCP |
|---|---|---|---|---|---|---|---|---|
| | | | Min | Max | kW | A | A | A |
| High Wall type | MMK-AP0073H2UL | 208/230-1-60 | 187 | 253 | 0.018 | 0.2 | 0.3 | 15 |
| | MMK-AP0093H2UL | 208/230-1-60 | 187 | 253 | 0.021 | 0.2 | 0.3 | 15 |
| | MMK-AP0123H2UL | 208/230-1-60 | 187 | 253 | 0.021 | 0.2 | 0.3 | 15 |
| | MMK-AP0153H2UL | 208/230-1-60 | 187 | 253 | 0.043 | 0.4 | 0.5 | 15 |
| | MMK-AP0183H2UL | 208/230-1-60 | 187 | 253 | 0.043 | 0.4 | 0.5 | 15 |
| | MMK-AP0243H2UL | 208/230-1-60 | 187 | 253 | 0.05 | 0.4 | 0.5 | 15 |

MCA : Minimum Circuit Amps
MOCP : Maximum Overcurrent Protection (Amps)
FLA : Full Load Amps

## 6. Sensible capacity table

High Wall type ( MMK-AP***3H2UL)

TC: Total capacity [Btu/h] SHC: Sensible capacity [Btu/h]

| unit size | outdoor air temp. °FDB | indoor air temp. | | | | | | | | | | | | | |
|---|---|---|---|---|---|---|---|---|---|---|---|---|---|---|---|
| | | 59°FWB | | 61°FWB | | 64°FWB | | 67°FWB | | 68°FWB | | 72°FWB | | 75°FWB | |
| | | 71°FDB | | 73°FDB | | 77°FDB | | 80°FDB | | 82°FDB | | 86°FDB | | 90°FDB | |
| | | TC | SHC | TC | SHC | TC | SHC | TC | SHC | TC | SHC | TC | SHC | TC | SHC |
| 007 | 50 | 6380 | 5260 | 6680 | 5400 | 7100 | 5620 | 7500 | 5800 | 7630 | 5820 | 8110 | 5740 | 8450 | 5530 |
| | 54 | 6380 | 5260 | 6680 | 5400 | 7100 | 5620 | 7500 | 5800 | 7630 | 5820 | 8110 | 5740 | 8450 | 5530 |
| | 57 | 6380 | 5260 | 6680 | 5400 | 7100 | 5620 | 7500 | 5800 | 7630 | 5820 | 8110 | 5740 | 8450 | 5530 |
| | 61 | 6380 | 5260 | 6680 | 5400 | 7100 | 5620 | 7500 | 5800 | 7630 | 5820 | 8110 | 5740 | 8450 | 5530 |
| | 64 | 6380 | 5260 | 6680 | 5400 | 7100 | 5620 | 7500 | 5800 | 7630 | 5820 | 8110 | 5740 | 8450 | 5530 |
| | 68 | 6380 | 5260 | 6680 | 5400 | 7100 | 5620 | 7500 | 5800 | 7630 | 5820 | 8110 | 5740 | 8450 | 5530 |
| | 70 | 6380 | 5260 | 6680 | 5400 | 7100 | 5620 | 7500 | 5800 | 7630 | 5820 | 8110 | 5740 | 8450 | 5530 |
| | 73 | 6380 | 5260 | 6680 | 5400 | 7100 | 5620 | 7500 | 5800 | 7630 | 5820 | 8110 | 5740 | 8450 | 5530 |
| | 77 | 6380 | 5260 | 6680 | 5400 | 7100 | 5620 | 7500 | 5800 | 7630 | 5820 | 8110 | 5740 | 8450 | 5530 |
| | 81 | 6380 | 5260 | 6680 | 5400 | 7100 | 5620 | 7500 | 5800 | 7630 | 5820 | 8110 | 5740 | 8450 | 5530 |
| | 84 | 6380 | 5260 | 6680 | 5400 | 7100 | 5620 | 7500 | 5800 | 7630 | 5820 | 8110 | 5740 | 8450 | 5530 |
| | 88 | 6380 | 5260 | 6680 | 5400 | 7100 | 5620 | 7500 | 5800 | 7630 | 5820 | 8110 | 5740 | 8450 | 5530 |
| | 91 | 6380 | 5260 | 6680 | 5400 | 7100 | 5620 | 7500 | 5800 | 7630 | 5820 | 8110 | 5740 | 8450 | 5530 |
| | 95 | 6380 | 5260 | 6680 | 5400 | 7100 | 5620 | 7500 | 5800 | 7630 | 5820 | 8110 | 5740 | 8450 | 5530 |
| | 99 | 6190 | 5110 | 6490 | 5240 | 6890 | 5460 | 7280 | 5630 | 7410 | 5650 | 7870 | 5570 | 8200 | 5370 |
| | 102 | 6050 | 4990 | 6330 | 5120 | 6730 | 5330 | 7110 | 5500 | 7230 | 5520 | 7690 | 5440 | 8010 | 5240 |
| 009 | 50 | 8090 | 6160 | 8460 | 6320 | 9000 | 6590 | 9500 | 6790 | 9660 | 6810 | 10270 | 6720 | 10700 | 6470 |
| | 54 | 8090 | 6160 | 8460 | 6320 | 9000 | 6590 | 9500 | 6790 | 9660 | 6810 | 10270 | 6720 | 10700 | 6470 |
| | 57 | 8090 | 6160 | 8460 | 6320 | 9000 | 6590 | 9500 | 6790 | 9660 | 6810 | 10270 | 6720 | 10700 | 6470 |
| | 61 | 8090 | 6160 | 8460 | 6320 | 9000 | 6590 | 9500 | 6790 | 9660 | 6810 | 10270 | 6720 | 10700 | 6470 |
| | 64 | 8090 | 6160 | 8460 | 6320 | 9000 | 6590 | 9500 | 6790 | 9660 | 6810 | 10270 | 6720 | 10700 | 6470 |
| | 68 | 8090 | 6160 | 8460 | 6320 | 9000 | 6590 | 9500 | 6790 | 9660 | 6810 | 10270 | 6720 | 10700 | 6470 |
| | 70 | 8090 | 6160 | 8460 | 6320 | 9000 | 6590 | 9500 | 6790 | 9660 | 6810 | 10270 | 6720 | 10700 | 6470 |
| | 73 | 8090 | 6160 | 8460 | 6320 | 9000 | 6590 | 9500 | 6790 | 9660 | 6810 | 10270 | 6720 | 10700 | 6470 |
| | 77 | 8090 | 6160 | 8460 | 6320 | 9000 | 6590 | 9500 | 6790 | 9660 | 6810 | 10270 | 6720 | 10700 | 6470 |
| | 81 | 8090 | 6160 | 8460 | 6320 | 9000 | 6590 | 9500 | 6790 | 9660 | 6810 | 10270 | 6720 | 10700 | 6470 |
| | 84 | 8090 | 6160 | 8460 | 6320 | 9000 | 6590 | 9500 | 6790 | 9660 | 6810 | 10270 | 6720 | 10700 | 6470 |
| | 88 | 8090 | 6160 | 8460 | 6320 | 9000 | 6590 | 9500 | 6790 | 9660 | 6810 | 10270 | 6720 | 10700 | 6470 |
| | 91 | 8090 | 6160 | 8460 | 6320 | 9000 | 6590 | 9500 | 6790 | 9660 | 6810 | 10270 | 6720 | 10700 | 6470 |
| | 95 | 8090 | 6160 | 8460 | 6320 | 9000 | 6590 | 9500 | 6790 | 9660 | 6810 | 10270 | 6720 | 10700 | 6470 |
| | 99 | 7860 | 5980 | 8210 | 6140 | 8740 | 6400 | 9220 | 6590 | 9380 | 6610 | 9970 | 6530 | 10390 | 6280 |
| | 102 | 7670 | 5840 | 8020 | 5990 | 8530 | 6250 | 9010 | 6440 | 9160 | 6460 | 9740 | 6370 | 10140 | 6130 |
| 012 | 50 | 10210 | 7550 | 10690 | 7760 | 11360 | 8070 | 12000 | 8330 | 12210 | 8360 | 12980 | 8250 | 13510 | 7940 |
| | 54 | 10210 | 7550 | 10690 | 7760 | 11360 | 8070 | 12000 | 8330 | 12210 | 8360 | 12980 | 8250 | 13510 | 7940 |
| | 57 | 10210 | 7550 | 10690 | 7760 | 11360 | 8070 | 12000 | 8330 | 12210 | 8360 | 12980 | 8250 | 13510 | 7940 |
| | 61 | 10210 | 7550 | 10690 | 7760 | 11360 | 8070 | 12000 | 8330 | 12210 | 8360 | 12980 | 8250 | 13510 | 7940 |
| | 64 | 10210 | 7550 | 10690 | 7760 | 11360 | 8070 | 12000 | 8330 | 12210 | 8360 | 12980 | 8250 | 13510 | 7940 |
| | 68 | 10210 | 7550 | 10690 | 7760 | 11360 | 8070 | 12000 | 8330 | 12210 | 8360 | 12980 | 8250 | 13510 | 7940 |
| | 70 | 10210 | 7550 | 10690 | 7760 | 11360 | 8070 | 12000 | 8330 | 12210 | 8360 | 12980 | 8250 | 13510 | 7940 |
| | 73 | 10210 | 7550 | 10690 | 7760 | 11360 | 8070 | 12000 | 8330 | 12210 | 8360 | 12980 | 8250 | 13510 | 7940 |
| | 77 | 10210 | 7550 | 10690 | 7760 | 11360 | 8070 | 12000 | 8330 | 12210 | 8360 | 12980 | 8250 | 13510 | 7940 |
| | 81 | 10210 | 7550 | 10690 | 7760 | 11360 | 8070 | 12000 | 8330 | 12210 | 8360 | 12980 | 8250 | 13510 | 7940 |
| | 84 | 10210 | 7550 | 10690 | 7760 | 11360 | 8070 | 12000 | 8330 | 12210 | 8360 | 12980 | 8250 | 13510 | 7940 |
| | 88 | 10210 | 7550 | 10690 | 7760 | 11360 | 8070 | 12000 | 8330 | 12210 | 8360 | 12980 | 8250 | 13510 | 7940 |
| | 91 | 10210 | 7550 | 10690 | 7760 | 11360 | 8070 | 12000 | 8330 | 12210 | 8360 | 12980 | 8250 | 13510 | 7940 |
| | 95 | 10210 | 7550 | 10690 | 7760 | 11360 | 8070 | 12000 | 8330 | 12210 | 8360 | 12980 | 8250 | 13510 | 7940 |
| | 99 | 9910 | 7330 | 10380 | 7530 | 11030 | 7840 | 11650 | 8090 | 11860 | 8120 | 12600 | 8010 | 13120 | 7710 |
| | 102 | 9680 | 7160 | 10130 | 7360 | 10770 | 7650 | 11380 | 7900 | 11580 | 7930 | 12310 | 7820 | 12810 | 7530 |

## High Wall type ( MMK-AP***3H2UL)

TC: Total capacity [Btu/h] SHC: Sensible capacity [Btu/h]

| unit size | outdoor air temp. °FDB | indoor air temp. | | | | | | | | | | | | | |
|---|---|---|---|---|---|---|---|---|---|---|---|---|---|---|---|
| | | 59°FWB | | 61°FWB | | 64°FWB | | 67°FWB | | 68°FWB | | 72°FWB | | 75°FWB | |
| | | 71°FDB | | 73°FDB | | 77°FDB | | 80°FDB | | 82°FDB | | 86°FDB | | 90°FDB | |
| | | TC | SHC | TC | SHC | TC | SHC | TC | SHC | TC | SHC | TC | SHC | TC | SHC |
| 015 | 50 | 13110 | 9000 | 13710 | 9240 | 14580 | 9620 | 15400 | 9920 | 15660 | 9950 | 16660 | 9820 | 17340 | 9450 |
| | 54 | 13110 | 9000 | 13710 | 9240 | 14580 | 9620 | 15400 | 9920 | 15660 | 9950 | 16660 | 9820 | 17340 | 9450 |
| | 57 | 13110 | 9000 | 13710 | 9240 | 14580 | 9620 | 15400 | 9920 | 15660 | 9950 | 16660 | 9820 | 17340 | 9450 |
| | 61 | 13110 | 9000 | 13710 | 9240 | 14580 | 9620 | 15400 | 9920 | 15660 | 9950 | 16660 | 9820 | 17340 | 9450 |
| | 64 | 13110 | 9000 | 13710 | 9240 | 14580 | 9620 | 15400 | 9920 | 15660 | 9950 | 16660 | 9820 | 17340 | 9450 |
| | 68 | 13110 | 9000 | 13710 | 9240 | 14580 | 9620 | 15400 | 9920 | 15660 | 9950 | 16660 | 9820 | 17340 | 9450 |
| | 70 | 13110 | 9000 | 13710 | 9240 | 14580 | 9620 | 15400 | 9920 | 15660 | 9950 | 16660 | 9820 | 17340 | 9450 |
| | 73 | 13110 | 9000 | 13710 | 9240 | 14580 | 9620 | 15400 | 9920 | 15660 | 9950 | 16660 | 9820 | 17340 | 9450 |
| | 77 | 13110 | 9000 | 13710 | 9240 | 14580 | 9620 | 15400 | 9920 | 15660 | 9950 | 16660 | 9820 | 17340 | 9450 |
| | 81 | 13110 | 9000 | 13710 | 9240 | 14580 | 9620 | 15400 | 9920 | 15660 | 9950 | 16660 | 9820 | 17340 | 9450 |
| | 84 | 13110 | 9000 | 13710 | 9240 | 14580 | 9620 | 15400 | 9920 | 15660 | 9950 | 16660 | 9820 | 17340 | 9450 |
| | 88 | 13110 | 9000 | 13710 | 9240 | 14580 | 9620 | 15400 | 9920 | 15660 | 9950 | 16660 | 9820 | 17340 | 9450 |
| | 91 | 13110 | 9000 | 13710 | 9240 | 14580 | 9620 | 15400 | 9920 | 15660 | 9950 | 16660 | 9820 | 17340 | 9450 |
| | 95 | 13110 | 9000 | 13710 | 9240 | 14580 | 9620 | 15400 | 9920 | 15660 | 9950 | 16660 | 9820 | 17340 | 9450 |
| | 99 | 12730 | 8740 | 13310 | 8970 | 14160 | 9340 | 14950 | 9630 | 15210 | 9660 | 16180 | 9540 | 16840 | 9180 |
| | 102 | 12430 | 8530 | 13000 | 8760 | 13820 | 9120 | 14600 | 9400 | 14850 | 9430 | 15790 | 9310 | 16440 | 8960 |
| 018 | 50 | 15320 | 10490 | 16030 | 10780 | 17040 | 11210 | 18000 | 11570 | 18310 | 11600 | 19470 | 11460 | 20270 | 11030 |
| | 54 | 15320 | 10490 | 16030 | 10780 | 17040 | 11210 | 18000 | 11570 | 18310 | 11600 | 19470 | 11460 | 20270 | 11030 |
| | 57 | 15320 | 10490 | 16030 | 10780 | 17040 | 11210 | 18000 | 11570 | 18310 | 11600 | 19470 | 11460 | 20270 | 11030 |
| | 61 | 15320 | 10490 | 16030 | 10780 | 17040 | 11210 | 18000 | 11570 | 18310 | 11600 | 19470 | 11460 | 20270 | 11030 |
| | 64 | 15320 | 10490 | 16030 | 10780 | 17040 | 11210 | 18000 | 11570 | 18310 | 11600 | 19470 | 11460 | 20270 | 11030 |
| | 68 | 15320 | 10490 | 16030 | 10780 | 17040 | 11210 | 18000 | 11570 | 18310 | 11600 | 19470 | 11460 | 20270 | 11030 |
| | 70 | 15320 | 10490 | 16030 | 10780 | 17040 | 11210 | 18000 | 11570 | 18310 | 11600 | 19470 | 11460 | 20270 | 11030 |
| | 73 | 15320 | 10490 | 16030 | 10780 | 17040 | 11210 | 18000 | 11570 | 18310 | 11600 | 19470 | 11460 | 20270 | 11030 |
| | 77 | 15320 | 10490 | 16030 | 10780 | 17040 | 11210 | 18000 | 11570 | 18310 | 11600 | 19470 | 11460 | 20270 | 11030 |
| | 81 | 15320 | 10490 | 16030 | 10780 | 17040 | 11210 | 18000 | 11570 | 18310 | 11600 | 19470 | 11460 | 20270 | 11030 |
| | 84 | 15320 | 10490 | 16030 | 10780 | 17040 | 11210 | 18000 | 11570 | 18310 | 11600 | 19470 | 11460 | 20270 | 11030 |
| | 88 | 15320 | 10490 | 16030 | 10780 | 17040 | 11210 | 18000 | 11570 | 18310 | 11600 | 19470 | 11460 | 20270 | 11030 |
| | 91 | 15320 | 10490 | 16030 | 10780 | 17040 | 11210 | 18000 | 11570 | 18310 | 11600 | 19470 | 11460 | 20270 | 11030 |
| | 95 | 15320 | 10490 | 16030 | 10780 | 17040 | 11210 | 18000 | 11570 | 18310 | 11600 | 19470 | 11460 | 20270 | 11030 |
| | 99 | 14880 | 10190 | 15570 | 10470 | 16550 | 10880 | 17480 | 11230 | 17780 | 11260 | 18910 | 11130 | 19680 | 10710 |
| | 102 | 14520 | 9940 | 15200 | 10220 | 16150 | 10630 | 17060 | 10970 | 17360 | 11000 | 18460 | 10860 | 19220 | 10460 |
| 024 | 50 | 20430 | 14410 | 21370 | 14800 | 22730 | 15410 | 24000 | 15890 | 24410 | 15930 | 25960 | 15730 | 27020 | 15140 |
| | 54 | 20430 | 14410 | 21370 | 14800 | 22730 | 15410 | 24000 | 15890 | 24410 | 15930 | 25960 | 15730 | 27020 | 15140 |
| | 57 | 20430 | 14410 | 21370 | 14800 | 22730 | 15410 | 24000 | 15890 | 24410 | 15930 | 25960 | 15730 | 27020 | 15140 |
| | 61 | 20430 | 14410 | 21370 | 14800 | 22730 | 15410 | 24000 | 15890 | 24410 | 15930 | 25960 | 15730 | 27020 | 15140 |
| | 64 | 20430 | 14410 | 21370 | 14800 | 22730 | 15410 | 24000 | 15890 | 24410 | 15930 | 25960 | 15730 | 27020 | 15140 |
| | 68 | 20430 | 14410 | 21370 | 14800 | 22730 | 15410 | 24000 | 15890 | 24410 | 15930 | 25960 | 15730 | 27020 | 15140 |
| | 70 | 20430 | 14410 | 21370 | 14800 | 22730 | 15410 | 24000 | 15890 | 24410 | 15930 | 25960 | 15730 | 27020 | 15140 |
| | 73 | 20430 | 14410 | 21370 | 14800 | 22730 | 15410 | 24000 | 15890 | 24410 | 15930 | 25960 | 15730 | 27020 | 15140 |
| | 77 | 20430 | 14410 | 21370 | 14800 | 22730 | 15410 | 24000 | 15890 | 24410 | 15930 | 25960 | 15730 | 27020 | 15140 |
| | 81 | 20430 | 14410 | 21370 | 14800 | 22730 | 15410 | 24000 | 15890 | 24410 | 15930 | 25960 | 15730 | 27020 | 15140 |
| | 84 | 20430 | 14410 | 21370 | 14800 | 22730 | 15410 | 24000 | 15890 | 24410 | 15930 | 25960 | 15730 | 27020 | 15140 |
| | 88 | 20430 | 14410 | 21370 | 14800 | 22730 | 15410 | 24000 | 15890 | 24410 | 15930 | 25960 | 15730 | 27020 | 15140 |
| | 91 | 20430 | 14410 | 21370 | 14800 | 22730 | 15410 | 24000 | 15890 | 24410 | 15930 | 25960 | 15730 | 27020 | 15140 |
| | 95 | 20430 | 14410 | 21370 | 14800 | 22730 | 15410 | 24000 | 15890 | 24410 | 15930 | 25960 | 15730 | 27020 | 15140 |
| | 99 | 19840 | 13990 | 20750 | 14370 | 22070 | 14960 | 23300 | 15430 | 23700 | 15470 | 25210 | 15270 | 26240 | 14700 |
| | 102 | 19370 | 13660 | 20260 | 14030 | 21550 | 14610 | 22750 | 15060 | 23140 | 15100 | 24610 | 14910 | 25610 | 14350 |

# 7. Fan characteristics

## Discharge Air Speed and Air Throw

**Model: MMK-AP0073H2UL**

Horizontal discharge initial speed High wind : 12.5ft/s (3.8m/s)
Med wind : 9.51ft/s (2.9m/s)
Low wind : 8.20ft/s (2.5m/s)

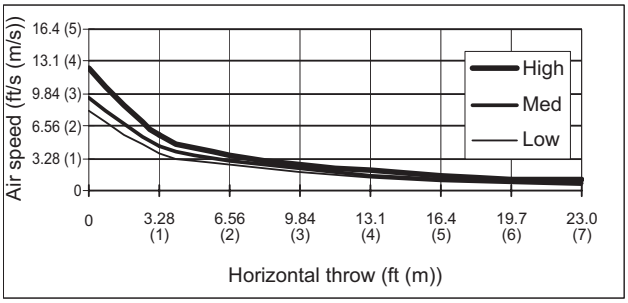


**Model: MMK-AP0093H2UL/AP0123H2UL**

Horizontal discharge initial speed High wind : 13.1ft/s (4.0m/s)
Med wind : 10.5ft/s (3.2m/s)
Low wind : 8.20ft/s (2.5m/s)

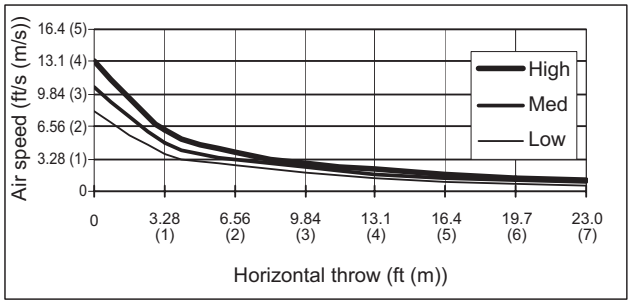


**Model: MMK-AP0153H2UL/AP0183H2UL**

Horizontal discharge initial speed High wind : 16.7ft/s (5.1m/s)
Med wind : 13.8ft/s (4.2m/s)
Low wind : 10.5ft/s (3.2m/s)

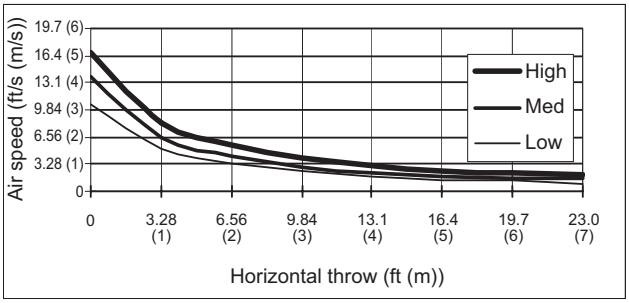


**Model: MMK-AP0243H2UL**

Horizontal discharge initial speed High wind : 20.3ft/s (6.2m/s)
Med wind : 15.4ft/s (4.7m/s)
Low wind : 12.1ft/s (3.7m/s)

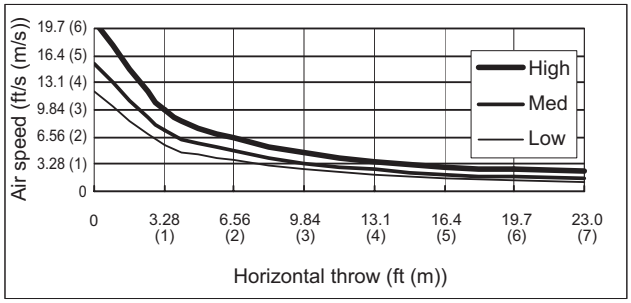

## 8. Sound characteristics (NC-Curve)

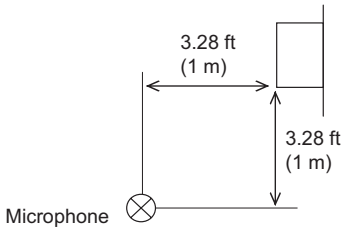


**MMK-AP0073H2UL**

| Sound pressure level (dB (A)) | H - M - L |
|---|---|
| | 36-32.5-30 |

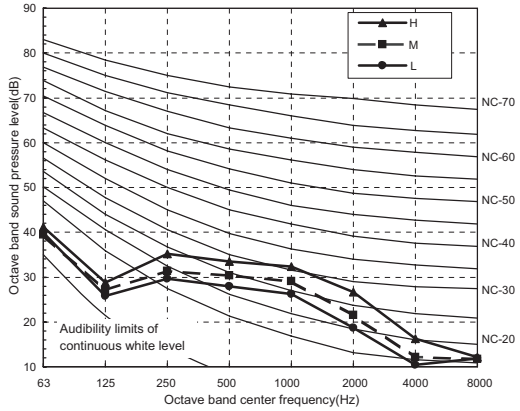


**MMK-AP0093/AP0123H2UL**

| Sound pressure level (dB (A)) | H - M - L |
|---|---|
| | 39-34-30 |

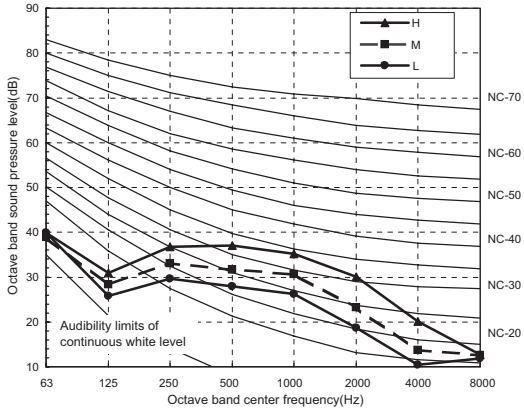


**MMK-AP0153/AP0183H2UL**

| Sound pressure level (dB (A)) | H - M - L |
|---|---|
| | 43-38-34.5 |

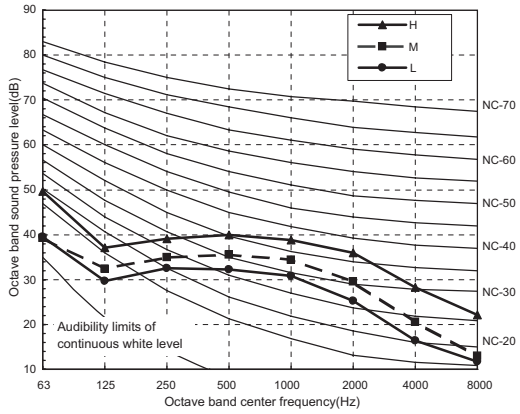


**MMK-AP0243H2UL**

| Sound pressure level (dB (A)) | H - M - L |
|---|---|
| | 47.5-40.5-35 |

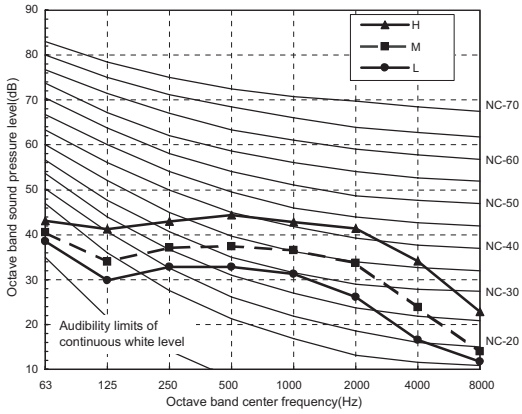

## 9. Accessory

### Remote control

**Packed with the indoor unit**

| Name | Model name | Appearance | Application | Function |
|---|---|---|---|---|
| Wireless remote control | WH-L15SE | | | • Start / Stop<br>• Changing mode<br>• Temperature setting<br>• Air flow changing (5 steps)<br>• Louver setting<br>• Clock<br>• Timer function<br>- ON/OFF timer (10 min. step)<br>- Everyday timer<br>- Sleep timer<br>- COMFORT SLEEP timer<br>• High power mode<br>• QUIET mode<br>• One-touch pre-set memory<br>• A/B temperature display switching |

6-2-5. Medium Static Ducted type

# Medium Static Ducted type

**MMD-AP0074BH2UL / MMD-AP0094BH2UL**
**MMD-AP0124BH2UL / MMD-AP0154BH2UL**
**MMD-AP0184BH2UL / MMD-AP0214BH2UL**
**MMD-AP0244BH2UL / MMD-AP0304BH2UL**
**MMD-AP0364BH2UL / MMD-AP0424BH2UL**
**MMD-AP0484BH2UL**

## Contents

1. Specifications
2. Dimension
3. Wiring diagram
4. Center of Gravity
5. Electrical current characteristics
6. Sensible capacity table
7. Fan characteristics
8. Sound characteristics (NC-Curve)
9. Accessory

# 1. Specifications

## Medium Static Ducted type

| Model name | | | MMD- | AP0074 BH2UL | AP0094 BH2UL | AP0124 BH2UL | AP0154 BH2UL | AP0184 BH2UL | AP0214 BH2UL | AP0244 BH2UL | AP0304 BH2UL | AP0364 BH2UL | AP0424 BH2UL | AP0484 BH2UL |
|---|---|---|---|---|---|---|---|---|---|---|---|---|---|---|
| Cooling Capacity | | | kBtu/h | 7.5 | 9.5 | 12 | 15.4 | 18 | 21 | 24 | 30 | 36 | 42 | 48 |
| Heating Capacity | | | kBtu/h | 8.5 | 10.5 | 13.5 | 17 | 20 | 24 | 27 | 34 | 40 | 47.5 | 54 |
| Electrical charastaristics | Power supply | | | 230V(208/230V) 1phase 60Hz | | | | | | | | | | |
| | Power consumption | | kW | 0.041 | 0.041 | 0.049 | 0.091 | 0.091 | 0.091 | 0.091 | 0.091 | 0.106 | 0.142 | 0.142 |
| Appearance | | | | Zinc hot dipping steel plate | | | | | | | | | | |
| Dimension | Unit | Height | In | 12.6 | | | | | | | | | | |
| | | Width | In | 21.7 | | | 39.4 | | 53.2 | | | | | |
| | | Depth | In | 31.5 | | | | | | | | | | |
| | Packing | Height | In | 14.6 | | | | | | | | | | |
| | | Width | In | 30.2 | | | 47.9 | | 61.7 | | | | | |
| | | Depth | In | 38.4 | | | | | | | | | | |
| Total weight | Unit | | lb | 64 | | | 93 | | 119 | | | | | |
| | Packed unit | | lb | 73 | | | 104 | | 135 | | | | | |
| Heat exchanger | | | | Finned tube | | | | | | | | | | |
| Fan unit | Fan | | | Centrifugal fan | | | | | | | | | | |
| | Standard air flow (High/Mid/Low) | | cfm | 312/282/165 | | 371/335/224 | 635/556/382 | | 788/694/424 | | | 1088/953/706 | 1324/1165/871 | |
| | Motor | | W | 150 | 150 | 150 | 150 | 150 | 150 | 150 | 150 | 150 | 150 | 150 |
| | External static pressure | Factory setting | In WG | 0.26 | 0.26 | 0.24 | 0.25 | 0.25 | 0.21 | 0.21 | 0.21 | 0.25 | 0.25 | 0.25 |
| | | Maximum (*1) | In WG | 0.48 | 0.48 | 0.48 | 0.48 | 0.48 | 0.48 | 0.48 | 0.48 | 0.48 | 0.44 | 0.44 |
| Connecting pipe | Gas side | | In | 3/8" | 3/8" | 3/8" | 1/2" | 1/2" | 5/8" | 5/8" | 5/8" | 5/8" | 5/8" | 5/8" |
| | Liquid side | | In | 1/4" | 1/4" | 1/4" | 1/4" | 1/4" | 3/8" | 3/8" | 3/8" | 3/8" | 3/8" | 3/8" |
| | Drain port (Nominal dia.) | | In | VP25(Polyvinyl chloride tube: External Dia.1-1/4 Internal Dia.1) | | | | | | | | | | |
| Sound puressure level (High/Mid/Low) (*2) | | | dB(A) | 34/30.5/27.5 | 34/30.5/27.5 | 34.5/32/31 | 37.5/35.5/29 | 37.5/35.5/29 | 35/33/31 | 35/33/31 | 35/33/31 | 38/35.5/34.5 | 41/38.5/36 | 41/38.5/36 |
| Option parts | Fan guard | | | TCB-IG071BUL | | | TCB-IG151BUL | | TCB-IG211BUL | | | | | |

Note
(*1) Non attached filter
(*2) The actual values in an external opeating environment are generally higher than the indicated values due to the contribution from ambient noise.

## 2. Dimension

MMD-AP0074BH2UL, AP0094BH2UL, AP0124BH2UL, AP0154BH2UL, AP0184BH2UL, AP0214BH2UL, AP0244BH2UL, AP0304BH2UL, AP0364BH2UL, AP0424BH2UL, AP0484BH2UL

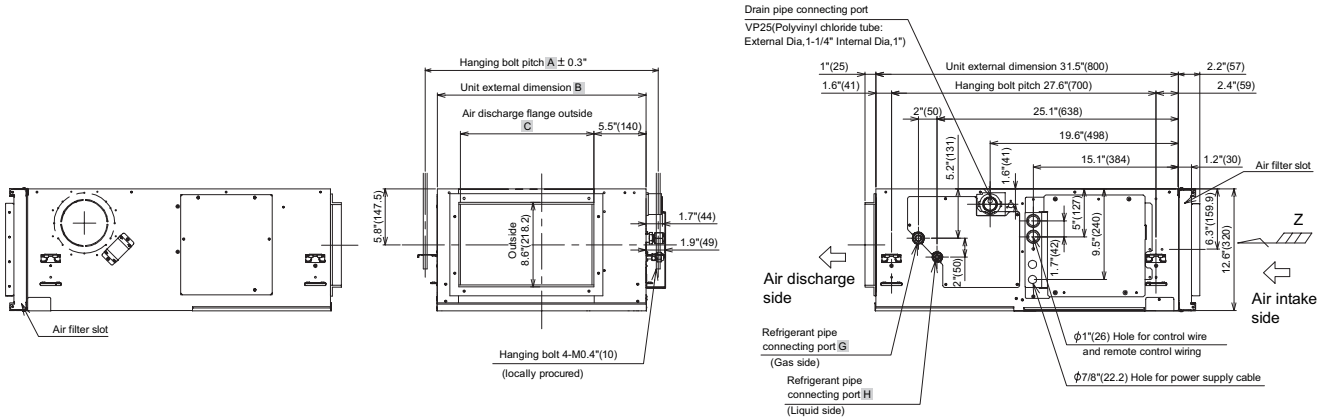


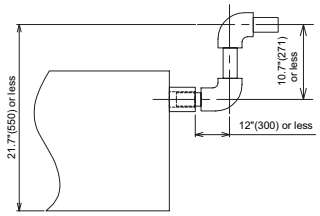


Drain-up piping

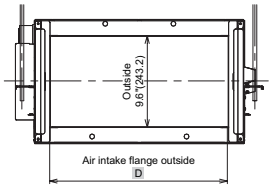


Z view

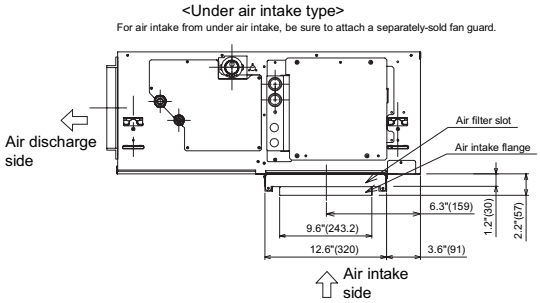


Space required for installation and servicing

Reserve space required for maintenance the indoor unit and service work.

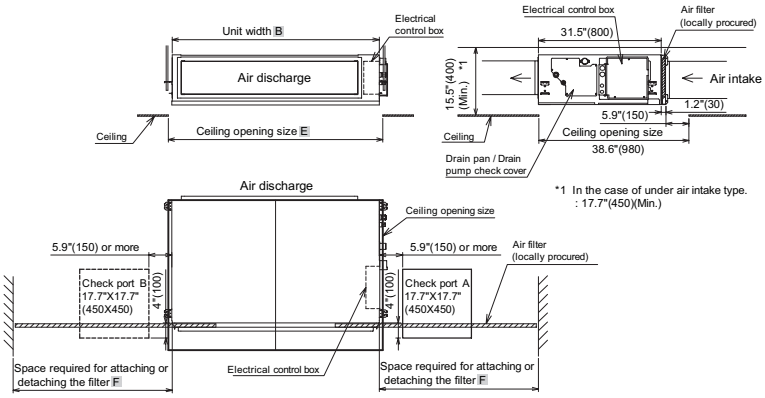


Notes)
* Set check port A for maintaining the electrical control box, filter, drain pump, drain pipe, and refrigerant pipe.
* Replace the filter through check port A or B.
  (If you pull out the filter in the opposite direction of the electrical control box, check port B is required.)
  Reserve space F required for attaching or detaching thefilter.
  Otherwise, the filter cannot be replaced.
* When pulling the refrigerant pipe, drain pipe, etc, avoid the filter port. Otherwise,the filter cannot be replaced.
* The indoor unit is not equipped with an air filter. Procure and install with locally.
* Set a ceiling opening port for maintaining the fan, fan motor, etc. Otherwise, they cannot be maintained.

Unit:in(mm)

| Model MMD- | A | B | C | D | E | F | G | H |
|---|---|---|---|---|---|---|---|---|
| AP0074BH2UL, AP0094BH2UL, AP0124BH2UL | 24.3" (616) | 21.7" (550) | 13.9" (351.6) | 18.6" (471.6) | 23.6" (550) | 23.6" (550) | Ø3/8" (9.5) | Ø1/4" (6.4) |
| AP0154BH2UL, AP0184BH2UL | 42" (1066) | 39.4" (1000) | 31.6" (801.6) | 36.3" (921.6) | 41.3" (1050) | 23.6" (550) | Ø1/2" (12.7) | Ø1/4" (6.4) |
| AP0214BH2UL, AP0244BH2UL, AP0304BH2UL, AP0364BH2UL, AP0424BH2UL, AP0484BH2UL | 55.7" (1416) | 53.2" (1350) | 45.4" (1151.6) | 50.1" (1271.6) | 55.1" (1400) | 40.5" (1030) | Ø5/8" (15.9) | Ø3/8" (9.5) |

## 3. Wiring diagram

MMD-AP0074BH2UL, AP0094BH2UL, AP0124BH2UL, AP0154BH2UL, AP0184BH2UL, AP0214BH2UL, AP0244BH2UL, AP0304BH2UL, AP0364BH2UL, AP0424BH2UL, AP0484BH2UL

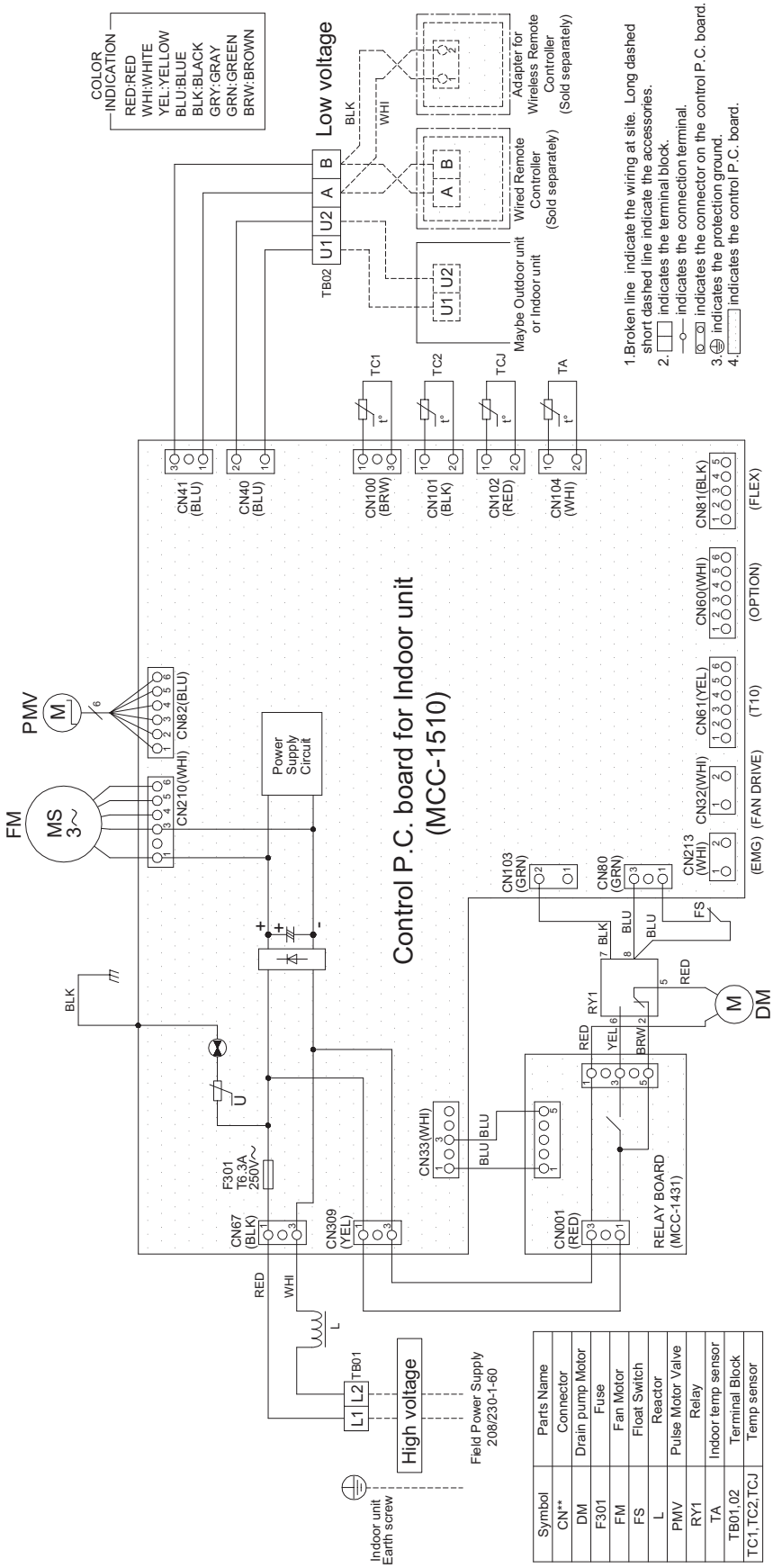

## 4. Center of Gravity

| Model name | X (In) | Y (In) | Z (In) | Total weight (lb) |
|---|---|---|---|---|
| MMD-AP0074BH2UL<br>MMD-AP0094BH2UL<br>MMD-AP0124BH2UL | 17.7 | 10.4 | 6.50 | 119 |
| MMD-AP0154BH2UL<br>MMD-AP0184BH2UL | 17.5 | 18.1 | 5.91 | 93 |
| MMD-AP0214BH2UL<br>MMD-AP0244BH2UL<br>MMD-AP0304BH2UL<br>MMD-AP0364BH2UL<br>MMD-AP0424BH2UL<br>MMD-AP0484BH2UL | 18.7 | 24.8 | 5.91 | 64 |

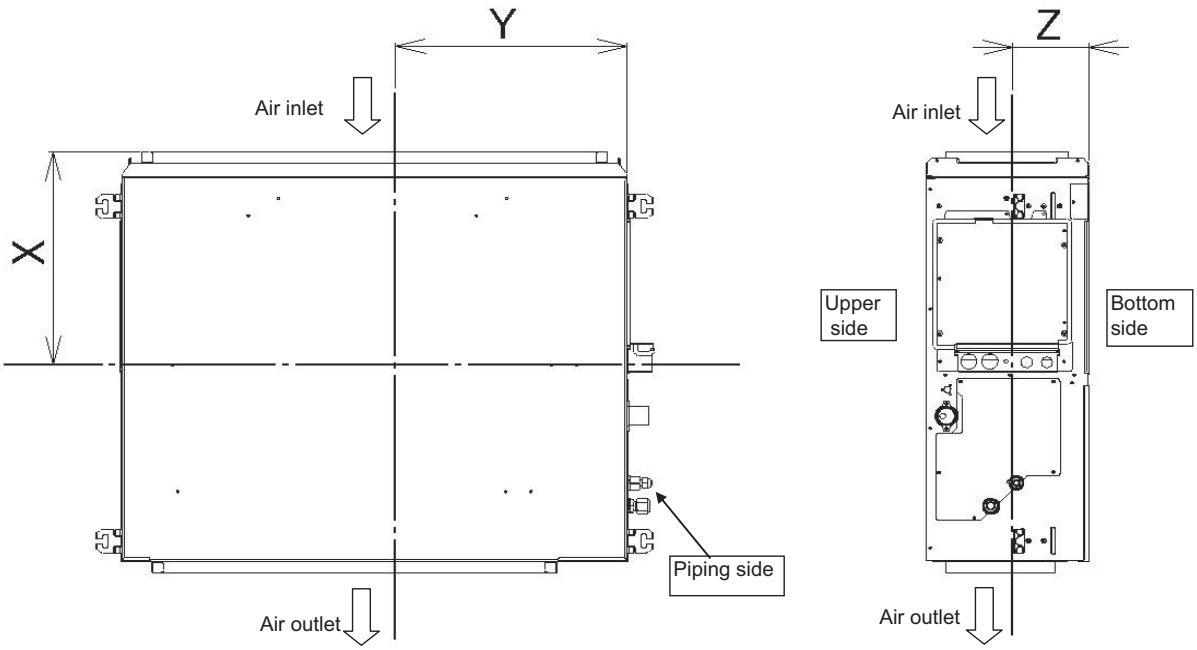


## 5. Electrical current characteristics

| Type | Model | Nominal Voltage (V-Ph-Hz) | Voltage Range (V) | | Power consumption | FLA | MCA | MOCP |
|---|---|---|---|---|---|---|---|---|
| | | | Min | Max | kW | A | A | A |
| Medium Static Ducted type | MMD-AP0074BH2UL | 208/230-1-60 | 187 | 253 | 0.038 | 0.8 | 1.0 | 15 |
| | MMD-AP0094BH2UL | 208/230-1-60 | 187 | 253 | 0.038 | 0.8 | 1.0 | 15 |
| | MMD-AP0124BH2UL | 208/230-1-60 | 187 | 253 | 0.042 | 0.8 | 1.0 | 15 |
| | MMD-AP0154BH2UL | 208/230-1-60 | 187 | 253 | 0.091 | 0.9 | 1.2 | 15 |
| | MMD-AP0184BH2UL | 208/230-1-60 | 187 | 253 | 0.091 | 0.9 | 1.2 | 15 |
| | MMD-AP0214BH2UL | 208/230-1-60 | 187 | 253 | 0.091 | 1.4 | 1.8 | 15 |
| | MMD-AP0244BH2UL | 208/230-1-60 | 187 | 253 | 0.091 | 1.4 | 1.8 | 15 |
| | MMD-AP0304BH2UL | 208/230-1-60 | 187 | 253 | 0.106 | 1.4 | 1.8 | 15 |
| | MMD-AP0364BH2UL | 208/230-1-60 | 187 | 253 | 0.106 | 1.8 | 2.3 | 15 |
| | MMD-AP0424BH2UL | 208/230-1-60 | 187 | 253 | 0.142 | 2.2 | 2.8 | 15 |
| | MMD-AP0484BH2UL | 208/230-1-60 | 187 | 253 | 0.142 | 2.2 | 2.8 | 15 |

MCA : Minimum Circuit Amps
FLA : Full Load Amps
MOCP : Maximum Overcurrent Protection (Amps)

## 6. Sensible capacity table

Medium Static Ducted type (MMD-AP***4BH2UL)

TC: Total capacity [Btu/h] SHC: Sensible capacity [Btu/h]

| unit size | outdoor air temp. °FDB | indoor air temp. | | | | | | | | | | | | | |
|---|---|---|---|---|---|---|---|---|---|---|---|---|---|---|---|
| | | 59°FWB | | 61°FWB | | 64°FWB | | 67°FWB | | 68°FWB | | 72°FWB | | 75°FWB | |
| | | 71°FDB | | 73°FDB | | 77°FDB | | 80°FDB | | 82°FDB | | 86°FDB | | 90°FDB | |
| | | TC | SHC | TC | SHC | TC | SHC | TC | SHC | TC | SHC | TC | SHC | TC | SHC |
| 007 | 50 | 6380 | 5920 | 6680 | 6080 | 7100 | 6330 | 7500 | 6530 | 7630 | 6550 | 8110 | 6460 | 8450 | 6230 |
| | 54 | 6380 | 5920 | 6680 | 6080 | 7100 | 6330 | 7500 | 6530 | 7630 | 6550 | 8110 | 6460 | 8450 | 6230 |
| | 57 | 6380 | 5920 | 6680 | 6080 | 7100 | 6330 | 7500 | 6530 | 7630 | 6550 | 8110 | 6460 | 8450 | 6230 |
| | 61 | 6380 | 5920 | 6680 | 6080 | 7100 | 6330 | 7500 | 6530 | 7630 | 6550 | 8110 | 6460 | 8450 | 6230 |
| | 64 | 6380 | 5920 | 6680 | 6080 | 7100 | 6330 | 7500 | 6530 | 7630 | 6550 | 8110 | 6460 | 8450 | 6230 |
| | 68 | 6380 | 5920 | 6680 | 6080 | 7100 | 6330 | 7500 | 6530 | 7630 | 6550 | 8110 | 6460 | 8450 | 6230 |
| | 70 | 6380 | 5920 | 6680 | 6080 | 7100 | 6330 | 7500 | 6530 | 7630 | 6550 | 8110 | 6460 | 8450 | 6230 |
| | 73 | 6380 | 5920 | 6680 | 6080 | 7100 | 6330 | 7500 | 6530 | 7630 | 6550 | 8110 | 6460 | 8450 | 6230 |
| | 77 | 6380 | 5920 | 6680 | 6080 | 7100 | 6330 | 7500 | 6530 | 7630 | 6550 | 8110 | 6460 | 8450 | 6230 |
| | 81 | 6380 | 5920 | 6680 | 6080 | 7100 | 6330 | 7500 | 6530 | 7630 | 6550 | 8110 | 6460 | 8450 | 6230 |
| | 84 | 6380 | 5920 | 6680 | 6080 | 7100 | 6330 | 7500 | 6530 | 7630 | 6550 | 8110 | 6460 | 8450 | 6230 |
| | 88 | 6380 | 5920 | 6680 | 6080 | 7100 | 6330 | 7500 | 6530 | 7630 | 6550 | 8110 | 6460 | 8450 | 6230 |
| | 91 | 6380 | 5920 | 6680 | 6080 | 7100 | 6330 | 7500 | 6530 | 7630 | 6550 | 8110 | 6460 | 8450 | 6230 |
| | 95 | 6380 | 5920 | 6680 | 6080 | 7100 | 6330 | 7500 | 6530 | 7630 | 6550 | 8110 | 6460 | 8450 | 6230 |
| | 99 | 6190 | 5750 | 6490 | 5900 | 6890 | 6150 | 7280 | 6340 | 7410 | 6360 | 7870 | 6270 | 8200 | 6050 |
| | 102 | 6050 | 5610 | 6330 | 5760 | 6730 | 6000 | 7110 | 6190 | 7230 | 6210 | 7690 | 6120 | 8010 | 5910 |
| 009 | 50 | 8090 | 6810 | 8460 | 7000 | 9000 | 7280 | 9500 | 7510 | 9660 | 7530 | 10270 | 7430 | 10700 | 7160 |
| | 54 | 8090 | 6810 | 8460 | 7000 | 9000 | 7280 | 9500 | 7510 | 9660 | 7530 | 10270 | 7430 | 10700 | 7160 |
| | 57 | 8090 | 6810 | 8460 | 7000 | 9000 | 7280 | 9500 | 7510 | 9660 | 7530 | 10270 | 7430 | 10700 | 7160 |
| | 61 | 8090 | 6810 | 8460 | 7000 | 9000 | 7280 | 9500 | 7510 | 9660 | 7530 | 10270 | 7430 | 10700 | 7160 |
| | 64 | 8090 | 6810 | 8460 | 7000 | 9000 | 7280 | 9500 | 7510 | 9660 | 7530 | 10270 | 7430 | 10700 | 7160 |
| | 68 | 8090 | 6810 | 8460 | 7000 | 9000 | 7280 | 9500 | 7510 | 9660 | 7530 | 10270 | 7430 | 10700 | 7160 |
| | 70 | 8090 | 6810 | 8460 | 7000 | 9000 | 7280 | 9500 | 7510 | 9660 | 7530 | 10270 | 7430 | 10700 | 7160 |
| | 73 | 8090 | 6810 | 8460 | 7000 | 9000 | 7280 | 9500 | 7510 | 9660 | 7530 | 10270 | 7430 | 10700 | 7160 |
| | 77 | 8090 | 6810 | 8460 | 7000 | 9000 | 7280 | 9500 | 7510 | 9660 | 7530 | 10270 | 7430 | 10700 | 7160 |
| | 81 | 8090 | 6810 | 8460 | 7000 | 9000 | 7280 | 9500 | 7510 | 9660 | 7530 | 10270 | 7430 | 10700 | 7160 |
| | 84 | 8090 | 6810 | 8460 | 7000 | 9000 | 7280 | 9500 | 7510 | 9660 | 7530 | 10270 | 7430 | 10700 | 7160 |
| | 88 | 8090 | 6810 | 8460 | 7000 | 9000 | 7280 | 9500 | 7510 | 9660 | 7530 | 10270 | 7430 | 10700 | 7160 |
| | 91 | 8090 | 6810 | 8460 | 7000 | 9000 | 7280 | 9500 | 7510 | 9660 | 7530 | 10270 | 7430 | 10700 | 7160 |
| | 95 | 8090 | 6810 | 8460 | 7000 | 9000 | 7280 | 9500 | 7510 | 9660 | 7530 | 10270 | 7430 | 10700 | 7160 |
| | 99 | 7860 | 6610 | 8210 | 6800 | 8740 | 7070 | 9220 | 7290 | 9380 | 7310 | 9970 | 7210 | 10390 | 6950 |
| | 102 | 7670 | 6460 | 8020 | 6640 | 8530 | 6900 | 9010 | 7120 | 9160 | 7140 | 9740 | 7040 | 10140 | 6790 |
| 012 | 50 | 10210 | 7400 | 10690 | 7600 | 11360 | 7910 | 12000 | 8160 | 12210 | 8190 | 12980 | 8080 | 13510 | 7770 |
| | 54 | 10210 | 7400 | 10690 | 7600 | 11360 | 7910 | 12000 | 8160 | 12210 | 8190 | 12980 | 8080 | 13510 | 7770 |
| | 57 | 10210 | 7400 | 10690 | 7600 | 11360 | 7910 | 12000 | 8160 | 12210 | 8190 | 12980 | 8080 | 13510 | 7770 |
| | 61 | 10210 | 7400 | 10690 | 7600 | 11360 | 7910 | 12000 | 8160 | 12210 | 8190 | 12980 | 8080 | 13510 | 7770 |
| | 64 | 10210 | 7400 | 10690 | 7600 | 11360 | 7910 | 12000 | 8160 | 12210 | 8190 | 12980 | 8080 | 13510 | 7770 |
| | 68 | 10210 | 7400 | 10690 | 7600 | 11360 | 7910 | 12000 | 8160 | 12210 | 8190 | 12980 | 8080 | 13510 | 7770 |
| | 70 | 10210 | 7400 | 10690 | 7600 | 11360 | 7910 | 12000 | 8160 | 12210 | 8190 | 12980 | 8080 | 13510 | 7770 |
| | 73 | 10210 | 7400 | 10690 | 7600 | 11360 | 7910 | 12000 | 8160 | 12210 | 8190 | 12980 | 8080 | 13510 | 7770 |
| | 77 | 10210 | 7400 | 10690 | 7600 | 11360 | 7910 | 12000 | 8160 | 12210 | 8190 | 12980 | 8080 | 13510 | 7770 |
| | 81 | 10210 | 7400 | 10690 | 7600 | 11360 | 7910 | 12000 | 8160 | 12210 | 8190 | 12980 | 8080 | 13510 | 7770 |
| | 84 | 10210 | 7400 | 10690 | 7600 | 11360 | 7910 | 12000 | 8160 | 12210 | 8190 | 12980 | 8080 | 13510 | 7770 |
| | 88 | 10210 | 7400 | 10690 | 7600 | 11360 | 7910 | 12000 | 8160 | 12210 | 8190 | 12980 | 8080 | 13510 | 7770 |
| | 91 | 10210 | 7400 | 10690 | 7600 | 11360 | 7910 | 12000 | 8160 | 12210 | 8190 | 12980 | 8080 | 13510 | 7770 |
| | 95 | 10210 | 7400 | 10690 | 7600 | 11360 | 7910 | 12000 | 8160 | 12210 | 8190 | 12980 | 8080 | 13510 | 7770 |
| | 99 | 9910 | 7190 | 10380 | 7380 | 11030 | 7680 | 11650 | 7920 | 11860 | 7950 | 12600 | 7850 | 13120 | 7540 |
| | 102 | 9680 | 7020 | 10130 | 7200 | 10770 | 7500 | 11380 | 7740 | 11580 | 7760 | 12310 | 7660 | 12810 | 7370 |
| 015 | 50 | 13110 | 11450 | 13710 | 11760 | 14580 | 12240 | 15400 | 12630 | 15660 | 12660 | 16660 | 12510 | 17340 | 12040 |
| | 54 | 13110 | 11450 | 13710 | 11760 | 14580 | 12240 | 15400 | 12630 | 15660 | 12660 | 16660 | 12510 | 17340 | 12040 |
| | 57 | 13110 | 11450 | 13710 | 11760 | 14580 | 12240 | 15400 | 12630 | 15660 | 12660 | 16660 | 12510 | 17340 | 12040 |
| | 61 | 13110 | 11450 | 13710 | 11760 | 14580 | 12240 | 15400 | 12630 | 15660 | 12660 | 16660 | 12510 | 17340 | 12040 |
| | 64 | 13110 | 11450 | 13710 | 11760 | 14580 | 12240 | 15400 | 12630 | 15660 | 12660 | 16660 | 12510 | 17340 | 12040 |
| | 68 | 13110 | 11450 | 13710 | 11760 | 14580 | 12240 | 15400 | 12630 | 15660 | 12660 | 16660 | 12510 | 17340 | 12040 |
| | 70 | 13110 | 11450 | 13710 | 11760 | 14580 | 12240 | 15400 | 12630 | 15660 | 12660 | 16660 | 12510 | 17340 | 12040 |
| | 73 | 13110 | 11450 | 13710 | 11760 | 14580 | 12240 | 15400 | 12630 | 15660 | 12660 | 16660 | 12510 | 17340 | 12040 |
| | 77 | 13110 | 11450 | 13710 | 11760 | 14580 | 12240 | 15400 | 12630 | 15660 | 12660 | 16660 | 12510 | 17340 | 12040 |
| | 81 | 13110 | 11450 | 13710 | 11760 | 14580 | 12240 | 15400 | 12630 | 15660 | 12660 | 16660 | 12510 | 17340 | 12040 |
| | 84 | 13110 | 11450 | 13710 | 11760 | 14580 | 12240 | 15400 | 12630 | 15660 | 12660 | 16660 | 12510 | 17340 | 12040 |
| | 88 | 13110 | 11450 | 13710 | 11760 | 14580 | 12240 | 15400 | 12630 | 15660 | 12660 | 16660 | 12510 | 17340 | 12040 |
| | 91 | 13110 | 11450 | 13710 | 11760 | 14580 | 12240 | 15400 | 12630 | 15660 | 12660 | 16660 | 12510 | 17340 | 12040 |
| | 95 | 13110 | 11450 | 13710 | 11760 | 14580 | 12240 | 15400 | 12630 | 15660 | 12660 | 16660 | 12510 | 17340 | 12040 |
| | 99 | 12730 | 11120 | 13310 | 11420 | 14160 | 11890 | 14950 | 12260 | 15210 | 12290 | 16180 | 12150 | 16840 | 11690 |
| | 102 | 12430 | 10850 | 13000 | 11150 | 13820 | 11600 | 14600 | 11970 | 14850 | 12000 | 15790 | 11860 | 16440 | 11410 |

## Medium Static Ducted type (MMD-AP***4BH2UL)

TC: Total capacity [Btu/h] SHC: Sensible capacity [Btu/h]

| unit size | outdoor air temp. °FDB | indoor air temp. | | | | | | | | | | | | | |
|---|---|---|---|---|---|---|---|---|---|---|---|---|---|---|---|
| | | 59°FWB | | 61°FWB | | 64°FWB | | 67°FWB | | 68°FWB | | 72°FWB | | 75°FWB | |
| | | 71°FDB | | 73°FDB | | 77°FDB | | 80°FDB | | 82°FDB | | 86°FDB | | 90°FDB | |
| | | TC | SHC | TC | SHC | TC | SHC | TC | SHC | TC | SHC | TC | SHC | TC | SHC |
| 018 | 50 | 15320 | 12400 | 16030 | 12740 | 17040 | 13260 | 18000 | 13680 | 18310 | 13720 | 19470 | 13550 | 20270 | 13040 |
| | 54 | 15320 | 12400 | 16030 | 12740 | 17040 | 13260 | 18000 | 13680 | 18310 | 13720 | 19470 | 13550 | 20270 | 13040 |
| | 57 | 15320 | 12400 | 16030 | 12740 | 17040 | 13260 | 18000 | 13680 | 18310 | 13720 | 19470 | 13550 | 20270 | 13040 |
| | 61 | 15320 | 12400 | 16030 | 12740 | 17040 | 13260 | 18000 | 13680 | 18310 | 13720 | 19470 | 13550 | 20270 | 13040 |
| | 64 | 15320 | 12400 | 16030 | 12740 | 17040 | 13260 | 18000 | 13680 | 18310 | 13720 | 19470 | 13550 | 20270 | 13040 |
| | 68 | 15320 | 12400 | 16030 | 12740 | 17040 | 13260 | 18000 | 13680 | 18310 | 13720 | 19470 | 13550 | 20270 | 13040 |
| | 70 | 15320 | 12400 | 16030 | 12740 | 17040 | 13260 | 18000 | 13680 | 18310 | 13720 | 19470 | 13550 | 20270 | 13040 |
| | 73 | 15320 | 12400 | 16030 | 12740 | 17040 | 13260 | 18000 | 13680 | 18310 | 13720 | 19470 | 13550 | 20270 | 13040 |
| | 77 | 15320 | 12400 | 16030 | 12740 | 17040 | 13260 | 18000 | 13680 | 18310 | 13720 | 19470 | 13550 | 20270 | 13040 |
| | 81 | 15320 | 12400 | 16030 | 12740 | 17040 | 13260 | 18000 | 13680 | 18310 | 13720 | 19470 | 13550 | 20270 | 13040 |
| | 84 | 15320 | 12400 | 16030 | 12740 | 17040 | 13260 | 18000 | 13680 | 18310 | 13720 | 19470 | 13550 | 20270 | 13040 |
| | 88 | 15320 | 12400 | 16030 | 12740 | 17040 | 13260 | 18000 | 13680 | 18310 | 13720 | 19470 | 13550 | 20270 | 13040 |
| | 91 | 15320 | 12400 | 16030 | 12740 | 17040 | 13260 | 18000 | 13680 | 18310 | 13720 | 19470 | 13550 | 20270 | 13040 |
| | 95 | 15320 | 12400 | 16030 | 12740 | 17040 | 13260 | 18000 | 13680 | 18310 | 13720 | 19470 | 13550 | 20270 | 13040 |
| | 99 | 14880 | 12040 | 15570 | 12370 | 16550 | 12880 | 17480 | 13280 | 17780 | 13320 | 18910 | 13160 | 19680 | 12660 |
| | 102 | 14520 | 11760 | 15200 | 12080 | 16150 | 12570 | 17060 | 12970 | 17360 | 13010 | 18460 | 12850 | 19220 | 12360 |
| 021 | 50 | 17240 | 14340 | 19070 | 15270 | 20370 | 16220 | 21000 | 16170 | 21630 | 16170 | 22890 | 16020 | 23940 | 15650 |
| | 54 | 17240 | 14340 | 19070 | 15270 | 20370 | 16220 | 21000 | 16170 | 21630 | 16170 | 22890 | 16020 | 23940 | 15650 |
| | 57 | 17240 | 14340 | 19070 | 15270 | 20370 | 16220 | 21000 | 16170 | 21630 | 16170 | 22890 | 16020 | 23940 | 15650 |
| | 61 | 17240 | 14340 | 19070 | 15270 | 20370 | 16220 | 21000 | 16170 | 21630 | 16170 | 22890 | 16020 | 23940 | 15650 |
| | 64 | 17240 | 14340 | 19070 | 15270 | 20370 | 16220 | 21000 | 16170 | 21630 | 16170 | 22890 | 16020 | 23940 | 15650 |
| | 68 | 17240 | 14340 | 19070 | 15270 | 20370 | 16220 | 21000 | 16170 | 21630 | 16170 | 22890 | 16020 | 23940 | 15650 |
| | 70 | 17240 | 14340 | 19070 | 15270 | 20370 | 16220 | 21000 | 16170 | 21630 | 16170 | 22890 | 16020 | 23940 | 15650 |
| | 73 | 17240 | 14340 | 19070 | 15270 | 20370 | 16220 | 21000 | 16170 | 21630 | 16170 | 22890 | 16020 | 23940 | 15650 |
| | 77 | 17240 | 14340 | 19070 | 15270 | 20370 | 16220 | 21000 | 16170 | 21630 | 16170 | 22890 | 16020 | 23940 | 15650 |
| | 81 | 17240 | 14340 | 19070 | 15270 | 20370 | 16220 | 21000 | 16170 | 21630 | 16170 | 22890 | 16020 | 23940 | 15650 |
| | 84 | 17240 | 14340 | 19070 | 15270 | 20370 | 16220 | 21000 | 16170 | 21630 | 16170 | 22890 | 16020 | 23940 | 15650 |
| | 88 | 17240 | 14340 | 19070 | 15270 | 20370 | 16220 | 21000 | 16170 | 21630 | 16170 | 22890 | 16020 | 23940 | 15650 |
| | 91 | 17240 | 14340 | 19070 | 15270 | 20370 | 16220 | 21000 | 16170 | 21630 | 16170 | 22890 | 16020 | 23940 | 15650 |
| | 95 | 17240 | 14340 | 19070 | 15270 | 20370 | 16220 | 21000 | 16170 | 21630 | 16170 | 22890 | 16020 | 23940 | 15650 |
| | 99 | 16740 | 13920 | 18520 | 14830 | 19780 | 15750 | 20390 | 15700 | 21000 | 15700 | 22230 | 15560 | 23250 | 15200 |
| | 102 | 16340 | 13590 | 18080 | 14480 | 19310 | 15380 | 19910 | 15330 | 20510 | 15330 | 21700 | 15190 | 22700 | 14840 |
| 024 | 50 | 19704 | 15322 | 21792 | 16318 | 23280 | 17331 | 24000 | 17280 | 24720 | 17279 | 26160 | 17120 | 27360 | 16724 |
| | 54 | 19704 | 15322 | 21792 | 16318 | 23280 | 17331 | 24000 | 17280 | 24720 | 17279 | 26160 | 17120 | 27360 | 16724 |
| | 57 | 19704 | 15322 | 21792 | 16318 | 23280 | 17331 | 24000 | 17280 | 24720 | 17279 | 26160 | 17120 | 27360 | 16724 |
| | 61 | 19704 | 15322 | 21792 | 16318 | 23280 | 17331 | 24000 | 17280 | 24720 | 17279 | 26160 | 17120 | 27360 | 16724 |
| | 64 | 19704 | 15322 | 21792 | 16318 | 23280 | 17331 | 24000 | 17280 | 24720 | 17279 | 26160 | 17120 | 27360 | 16724 |
| | 68 | 19704 | 15322 | 21792 | 16318 | 23280 | 17331 | 24000 | 17280 | 24720 | 17279 | 26160 | 17120 | 27360 | 16724 |
| | 70 | 19704 | 15322 | 21792 | 16318 | 23280 | 17331 | 24000 | 17280 | 24720 | 17279 | 26160 | 17120 | 27360 | 16724 |
| | 73 | 19704 | 15322 | 21792 | 16318 | 23280 | 17331 | 24000 | 17280 | 24720 | 17279 | 26160 | 17120 | 27360 | 16724 |
| | 77 | 19704 | 15322 | 21792 | 16318 | 23280 | 17331 | 24000 | 17280 | 24720 | 17279 | 26160 | 17120 | 27360 | 16724 |
| | 81 | 19704 | 15322 | 21792 | 16318 | 23280 | 17331 | 24000 | 17280 | 24720 | 17279 | 26160 | 17120 | 27360 | 16724 |
| | 84 | 19704 | 15322 | 21792 | 16318 | 23280 | 17331 | 24000 | 17280 | 24720 | 17279 | 26160 | 17120 | 27360 | 16724 |
| | 88 | 19704 | 15322 | 21792 | 16318 | 23280 | 17331 | 24000 | 17280 | 24720 | 17279 | 26160 | 17120 | 27360 | 16724 |
| | 91 | 19704 | 15322 | 21792 | 16318 | 23280 | 17331 | 24000 | 17280 | 24720 | 17279 | 26160 | 17120 | 27360 | 16724 |
| | 95 | 19704 | 15322 | 21792 | 16318 | 23280 | 17331 | 24000 | 17280 | 24720 | 17279 | 26160 | 17120 | 27360 | 16724 |
| | 99 | 19133 | 14877 | 21160 | 15845 | 22605 | 16829 | 23304 | 16779 | 24003 | 16778 | 25401 | 16623 | 26567 | 16239 |
| | 102 | 18679 | 14525 | 20659 | 15469 | 22069 | 16430 | 22752 | 16381 | 23435 | 16380 | 24800 | 16229 | 25937 | 15854 |
| 030 | 50 | 24630 | 17560 | 27240 | 18700 | 29100 | 19860 | 30000 | 19800 | 30900 | 19800 | 32700 | 19620 | 34200 | 19160 |
| | 54 | 24630 | 17560 | 27240 | 18700 | 29100 | 19860 | 30000 | 19800 | 30900 | 19800 | 32700 | 19620 | 34200 | 19160 |
| | 57 | 24630 | 17560 | 27240 | 18700 | 29100 | 19860 | 30000 | 19800 | 30900 | 19800 | 32700 | 19620 | 34200 | 19160 |
| | 61 | 24630 | 17560 | 27240 | 18700 | 29100 | 19860 | 30000 | 19800 | 30900 | 19800 | 32700 | 19620 | 34200 | 19160 |
| | 64 | 24630 | 17560 | 27240 | 18700 | 29100 | 19860 | 30000 | 19800 | 30900 | 19800 | 32700 | 19620 | 34200 | 19160 |
| | 68 | 24630 | 17560 | 27240 | 18700 | 29100 | 19860 | 30000 | 19800 | 30900 | 19800 | 32700 | 19620 | 34200 | 19160 |
| | 70 | 24630 | 17560 | 27240 | 18700 | 29100 | 19860 | 30000 | 19800 | 30900 | 19800 | 32700 | 19620 | 34200 | 19160 |
| | 73 | 24630 | 17560 | 27240 | 18700 | 29100 | 19860 | 30000 | 19800 | 30900 | 19800 | 32700 | 19620 | 34200 | 19160 |
| | 77 | 24630 | 17560 | 27240 | 18700 | 29100 | 19860 | 30000 | 19800 | 30900 | 19800 | 32700 | 19620 | 34200 | 19160 |
| | 81 | 24630 | 17560 | 27240 | 18700 | 29100 | 19860 | 30000 | 19800 | 30900 | 19800 | 32700 | 19620 | 34200 | 19160 |
| | 84 | 24630 | 17560 | 27240 | 18700 | 29100 | 19860 | 30000 | 19800 | 30900 | 19800 | 32700 | 19620 | 34200 | 19160 |
| | 88 | 24630 | 17560 | 27240 | 18700 | 29100 | 19860 | 30000 | 19800 | 30900 | 19800 | 32700 | 19620 | 34200 | 19160 |
| | 91 | 24630 | 17560 | 27240 | 18700 | 29100 | 19860 | 30000 | 19800 | 30900 | 19800 | 32700 | 19620 | 34200 | 19160 |
| | 95 | 24630 | 17560 | 27240 | 18700 | 29100 | 19860 | 30000 | 19800 | 30900 | 19800 | 32700 | 19620 | 34200 | 19160 |
| | 99 | 23920 | 17050 | 26450 | 18160 | 28260 | 19280 | 29130 | 19230 | 30000 | 19230 | 31750 | 19050 | 33210 | 18600 |
| | 102 | 23350 | 16650 | 25820 | 17730 | 27590 | 18830 | 28440 | 18770 | 29290 | 18770 | 31000 | 18600 | 32420 | 18160 |

## Medium Static Ducted type (MMD-AP***4BH2UL)

TC: Total capacity [Btu/h] SHC: Sensible capacity [Btu/h]

| unit size | outdoor air temp. °FDB | indoor air temp. | | | | | | | | | | | | | |
|---|---|---|---|---|---|---|---|---|---|---|---|---|---|---|---|
| | | 59°FWB | | 61°FWB | | 64°FWB | | 67°FWB | | 68°FWB | | 72°FWB | | 75°FWB | |
| | | 71°FDB | | 73°FDB | | 77°FDB | | 80°FDB | | 82°FDB | | 86°FDB | | 90°FDB | |
| | | TC | SHC | TC | SHC | TC | SHC | TC | SHC | TC | SHC | TC | SHC | TC | SHC |
| 036 | 50 | 29560 | 24260 | 32690 | 25840 | 34920 | 27440 | 36000 | 27360 | 37080 | 27360 | 39240 | 27110 | 41040 | 26480 |
| | 54 | 29560 | 24260 | 32690 | 25840 | 34920 | 27440 | 36000 | 27360 | 37080 | 27360 | 39240 | 27110 | 41040 | 26480 |
| | 57 | 29560 | 24260 | 32690 | 25840 | 34920 | 27440 | 36000 | 27360 | 37080 | 27360 | 39240 | 27110 | 41040 | 26480 |
| | 61 | 29560 | 24260 | 32690 | 25840 | 34920 | 27440 | 36000 | 27360 | 37080 | 27360 | 39240 | 27110 | 41040 | 26480 |
| | 64 | 29560 | 24260 | 32690 | 25840 | 34920 | 27440 | 36000 | 27360 | 37080 | 27360 | 39240 | 27110 | 41040 | 26480 |
| | 68 | 29560 | 24260 | 32690 | 25840 | 34920 | 27440 | 36000 | 27360 | 37080 | 27360 | 39240 | 27110 | 41040 | 26480 |
| | 70 | 29560 | 24260 | 32690 | 25840 | 34920 | 27440 | 36000 | 27360 | 37080 | 27360 | 39240 | 27110 | 41040 | 26480 |
| | 73 | 29560 | 24260 | 32690 | 25840 | 34920 | 27440 | 36000 | 27360 | 37080 | 27360 | 39240 | 27110 | 41040 | 26480 |
| | 77 | 29560 | 24260 | 32690 | 25840 | 34920 | 27440 | 36000 | 27360 | 37080 | 27360 | 39240 | 27110 | 41040 | 26480 |
| | 81 | 29560 | 24260 | 32690 | 25840 | 34920 | 27440 | 36000 | 27360 | 37080 | 27360 | 39240 | 27110 | 41040 | 26480 |
| | 84 | 29560 | 24260 | 32690 | 25840 | 34920 | 27440 | 36000 | 27360 | 37080 | 27360 | 39240 | 27110 | 41040 | 26480 |
| | 88 | 29560 | 24260 | 32690 | 25840 | 34920 | 27440 | 36000 | 27360 | 37080 | 27360 | 39240 | 27110 | 41040 | 26480 |
| | 91 | 29560 | 24260 | 32690 | 25840 | 34920 | 27440 | 36000 | 27360 | 37080 | 27360 | 39240 | 27110 | 41040 | 26480 |
| | 95 | 29560 | 24260 | 32690 | 25840 | 34920 | 27440 | 36000 | 27360 | 37080 | 27360 | 39240 | 27110 | 41040 | 26480 |
| | 99 | 28700 | 23560 | 31740 | 25090 | 33910 | 26640 | 34960 | 26570 | 36000 | 26570 | 38100 | 26320 | 39850 | 25710 |
| | 102 | 28020 | 23000 | 30990 | 24500 | 33100 | 26010 | 34130 | 25940 | 35150 | 25940 | 37200 | 25700 | 38910 | 25100 |
| 042 | 50 | 34480 | 26810 | 38140 | 28560 | 40740 | 30330 | 42000 | 30240 | 43260 | 30240 | 45780 | 29960 | 47880 | 29270 |
| | 54 | 34480 | 26810 | 38140 | 28560 | 40740 | 30330 | 42000 | 30240 | 43260 | 30240 | 45780 | 29960 | 47880 | 29270 |
| | 57 | 34480 | 26810 | 38140 | 28560 | 40740 | 30330 | 42000 | 30240 | 43260 | 30240 | 45780 | 29960 | 47880 | 29270 |
| | 61 | 34480 | 26810 | 38140 | 28560 | 40740 | 30330 | 42000 | 30240 | 43260 | 30240 | 45780 | 29960 | 47880 | 29270 |
| | 64 | 34480 | 26810 | 38140 | 28560 | 40740 | 30330 | 42000 | 30240 | 43260 | 30240 | 45780 | 29960 | 47880 | 29270 |
| | 68 | 34480 | 26810 | 38140 | 28560 | 40740 | 30330 | 42000 | 30240 | 43260 | 30240 | 45780 | 29960 | 47880 | 29270 |
| | 70 | 34480 | 26810 | 38140 | 28560 | 40740 | 30330 | 42000 | 30240 | 43260 | 30240 | 45780 | 29960 | 47880 | 29270 |
| | 73 | 34480 | 26810 | 38140 | 28560 | 40740 | 30330 | 42000 | 30240 | 43260 | 30240 | 45780 | 29960 | 47880 | 29270 |
| | 77 | 34480 | 26810 | 38140 | 28560 | 40740 | 30330 | 42000 | 30240 | 43260 | 30240 | 45780 | 29960 | 47880 | 29270 |
| | 81 | 34480 | 26810 | 38140 | 28560 | 40740 | 30330 | 42000 | 30240 | 43260 | 30240 | 45780 | 29960 | 47880 | 29270 |
| | 84 | 34480 | 26810 | 38140 | 28560 | 40740 | 30330 | 42000 | 30240 | 43260 | 30240 | 45780 | 29960 | 47880 | 29270 |
| | 88 | 34480 | 26810 | 38140 | 28560 | 40740 | 30330 | 42000 | 30240 | 43260 | 30240 | 45780 | 29960 | 47880 | 29270 |
| | 91 | 34480 | 26810 | 38140 | 28560 | 40740 | 30330 | 42000 | 30240 | 43260 | 30240 | 45780 | 29960 | 47880 | 29270 |
| | 95 | 34480 | 26810 | 38140 | 28560 | 40740 | 30330 | 42000 | 30240 | 43260 | 30240 | 45780 | 29960 | 47880 | 29270 |
| | 99 | 33480 | 26030 | 37030 | 27730 | 39560 | 29450 | 40780 | 29360 | 42010 | 29360 | 44450 | 29090 | 46490 | 28420 |
| | 102 | 32690 | 25420 | 36160 | 27070 | 38620 | 28750 | 39820 | 28670 | 41010 | 28670 | 43400 | 28400 | 45390 | 27750 |
| 048 | 50 | 39410 | 29370 | 43580 | 31270 | 46560 | 33220 | 48000 | 33120 | 49440 | 33120 | 52320 | 32810 | 54720 | 32050 |
| | 54 | 39410 | 29370 | 43580 | 31270 | 46560 | 33220 | 48000 | 33120 | 49440 | 33120 | 52320 | 32810 | 54720 | 32050 |
| | 57 | 39410 | 29370 | 43580 | 31270 | 46560 | 33220 | 48000 | 33120 | 49440 | 33120 | 52320 | 32810 | 54720 | 32050 |
| | 61 | 39410 | 29370 | 43580 | 31270 | 46560 | 33220 | 48000 | 33120 | 49440 | 33120 | 52320 | 32810 | 54720 | 32050 |
| | 64 | 39410 | 29370 | 43580 | 31270 | 46560 | 33220 | 48000 | 33120 | 49440 | 33120 | 52320 | 32810 | 54720 | 32050 |
| | 68 | 39410 | 29370 | 43580 | 31270 | 46560 | 33220 | 48000 | 33120 | 49440 | 33120 | 52320 | 32810 | 54720 | 32050 |
| | 70 | 39410 | 29370 | 43580 | 31270 | 46560 | 33220 | 48000 | 33120 | 49440 | 33120 | 52320 | 32810 | 54720 | 32050 |
| | 73 | 39410 | 29370 | 43580 | 31270 | 46560 | 33220 | 48000 | 33120 | 49440 | 33120 | 52320 | 32810 | 54720 | 32050 |
| | 77 | 39410 | 29370 | 43580 | 31270 | 46560 | 33220 | 48000 | 33120 | 49440 | 33120 | 52320 | 32810 | 54720 | 32050 |
| | 81 | 39410 | 29370 | 43580 | 31270 | 46560 | 33220 | 48000 | 33120 | 49440 | 33120 | 52320 | 32810 | 54720 | 32050 |
| | 84 | 39410 | 29370 | 43580 | 31270 | 46560 | 33220 | 48000 | 33120 | 49440 | 33120 | 52320 | 32810 | 54720 | 32050 |
| | 88 | 39410 | 29370 | 43580 | 31270 | 46560 | 33220 | 48000 | 33120 | 49440 | 33120 | 52320 | 32810 | 54720 | 32050 |
| | 91 | 39410 | 29370 | 43580 | 31270 | 46560 | 33220 | 48000 | 33120 | 49440 | 33120 | 52320 | 32810 | 54720 | 32050 |
| | 95 | 39410 | 29370 | 43580 | 31270 | 46560 | 33220 | 48000 | 33120 | 49440 | 33120 | 52320 | 32810 | 54720 | 32050 |
| | 99 | 38270 | 28520 | 42320 | 30360 | 45210 | 32260 | 46610 | 32160 | 48010 | 32160 | 50800 | 31860 | 53130 | 31120 |
| | 102 | 37360 | 27840 | 41310 | 29640 | 44140 | 31490 | 45500 | 31400 | 46870 | 31400 | 49600 | 31100 | 51870 | 30380 |

# 7. Fan characteristics

## Rear suction

* It is not possible to use the level of external static pressure that is lower than the resistance pressure of the filter (local supply). Therefore be sure to check the pressure of installed filter, and to set correct pressure level that is higher than pressure of the filter.

**MMD-AP0074BH2UL**
**MMD-AP0094BH2UL**

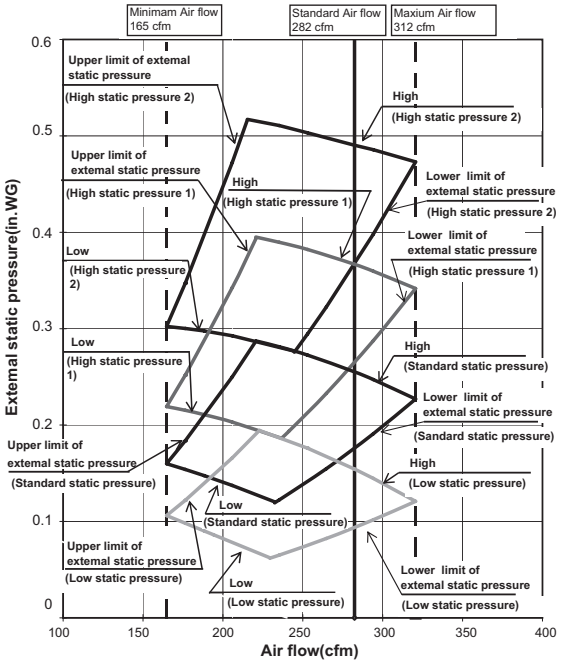


**MMD-AP0124BH2UL**

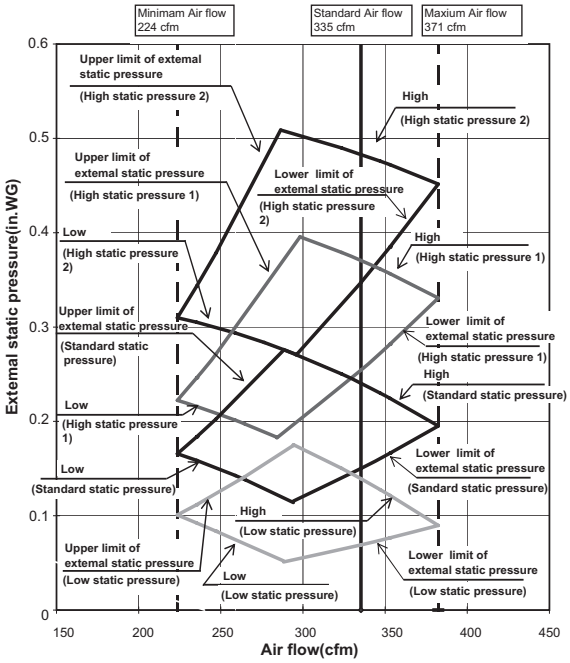


**MMD-AP0154BH2UL**
**MMD-AP0184BH2UL**

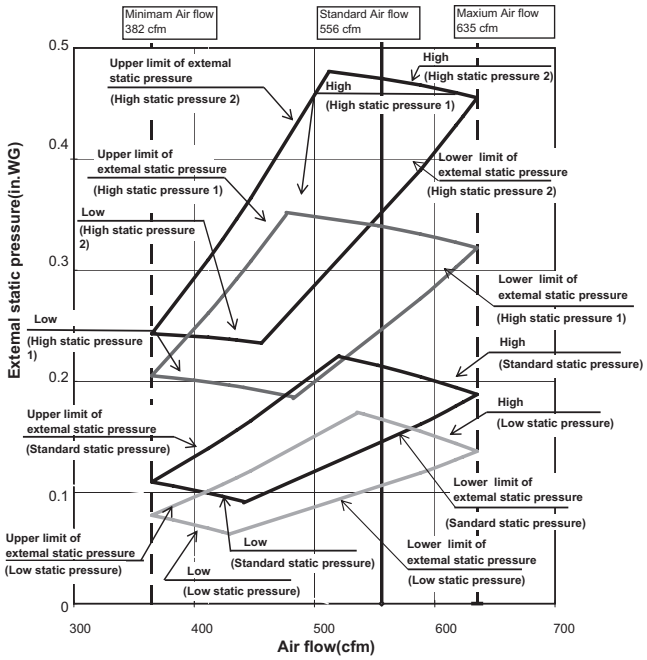


**MMD-AP0214BH2UL**
**MMD-AP0244BH2UL**
**MMD-AP0304BH2UL**

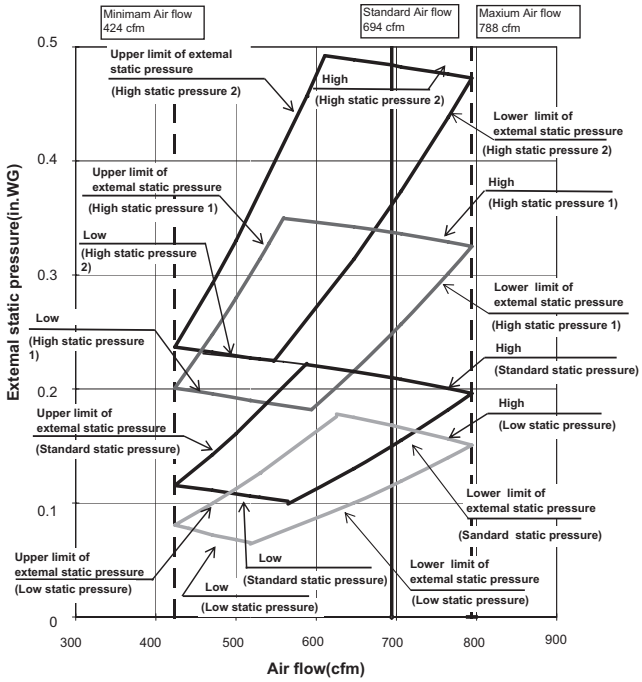

## Rear suction

**MMD-AP0364BH2UL**

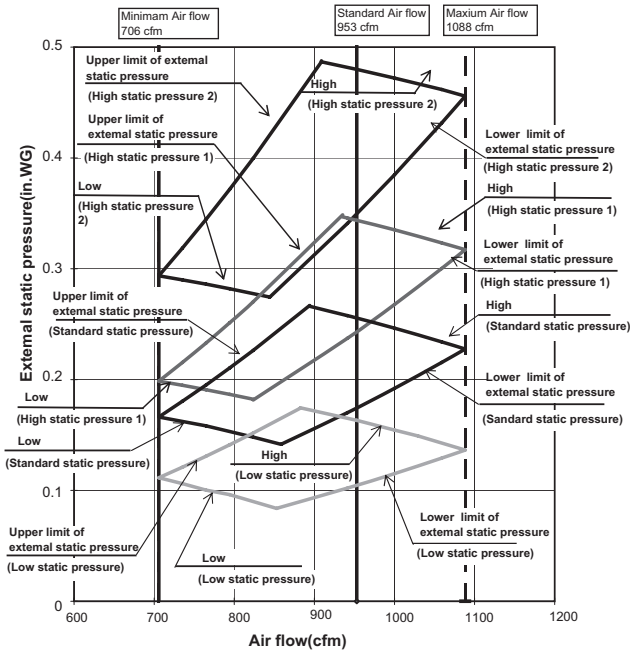


**MMD-AP0424BH2UL**
**MMD-AP0484BH2UL**

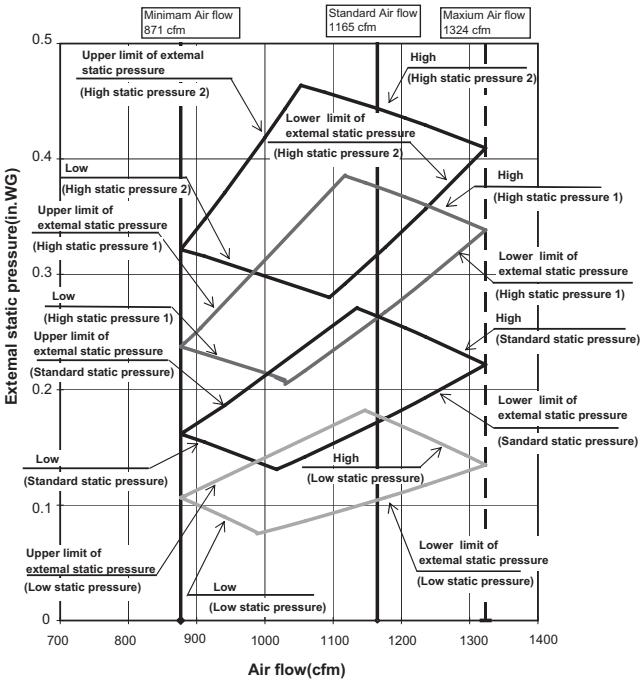

## Underside suction

**MMD-AP0074BH2UL**
**MMD-AP0094BH2UL**

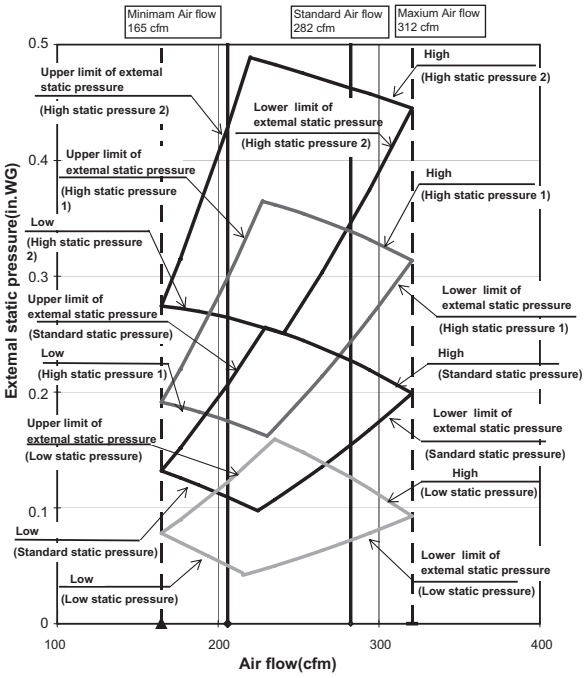


**MMD-AP0124BH2UL**

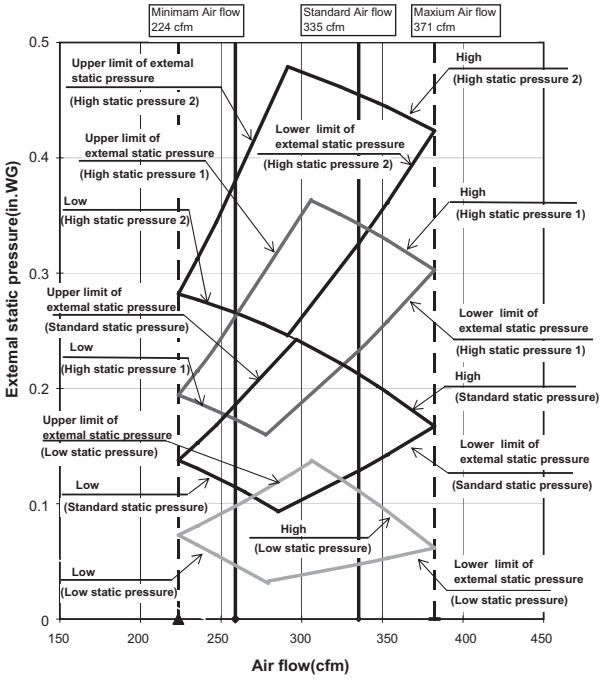


**MMD-AP0154BH2UL**
**MMD-AP0184BH2UL**

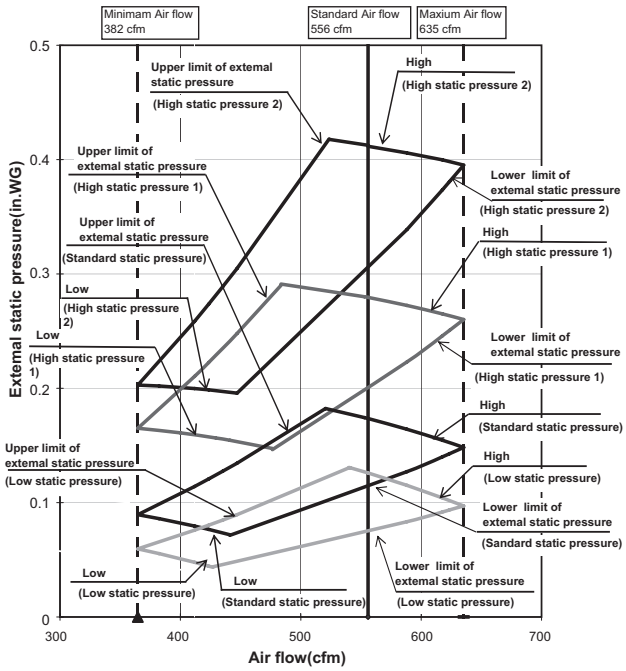


**MMD-AP0214BH2UL**
**MMD-AP0244BH2UL**
**MMD-AP0304BH2UL**

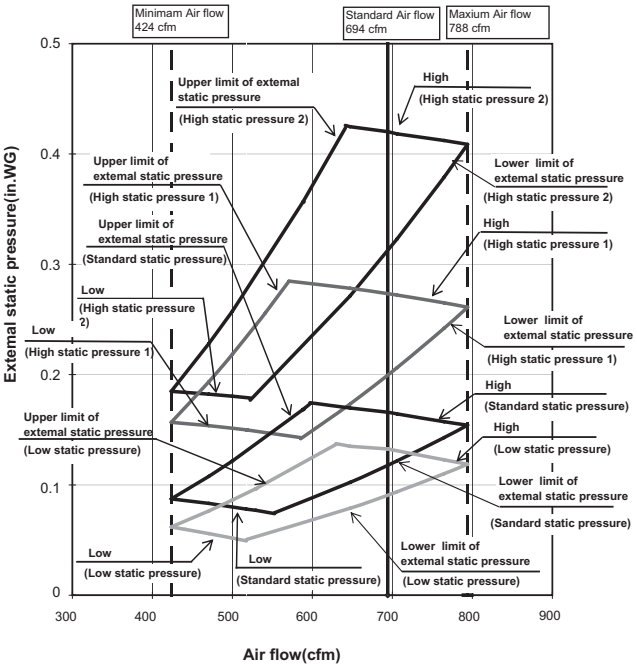

## Underside suction

**MMD-AP0364BH2UL**

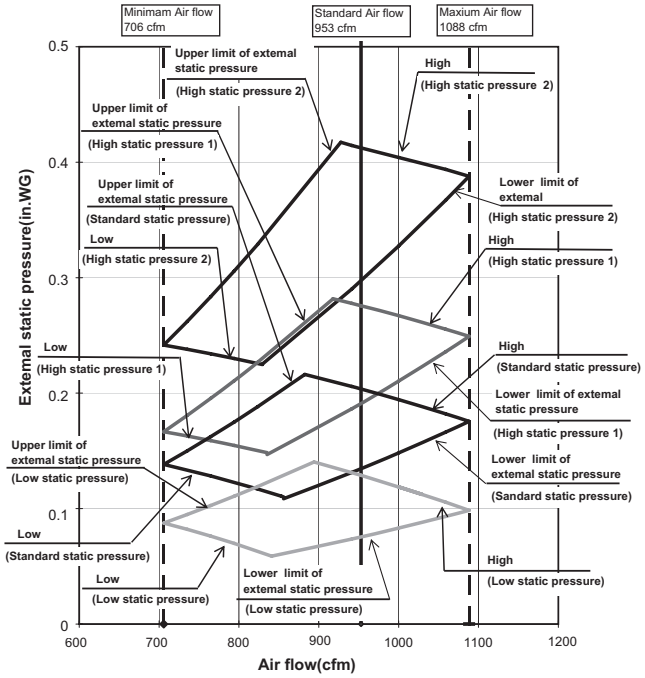


**MMD-AP0424BH2UL**
**MMD-AP0484BH2UL**

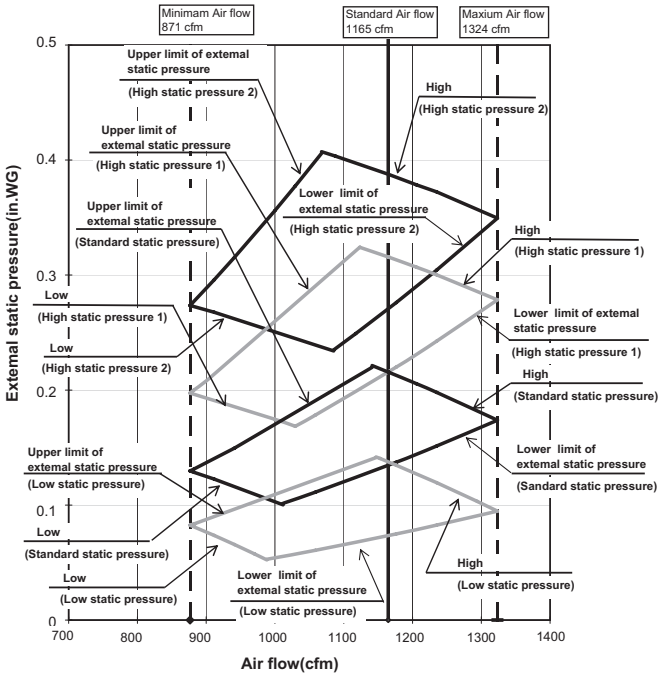

## 8. Sound characteristics (NC-Curve)

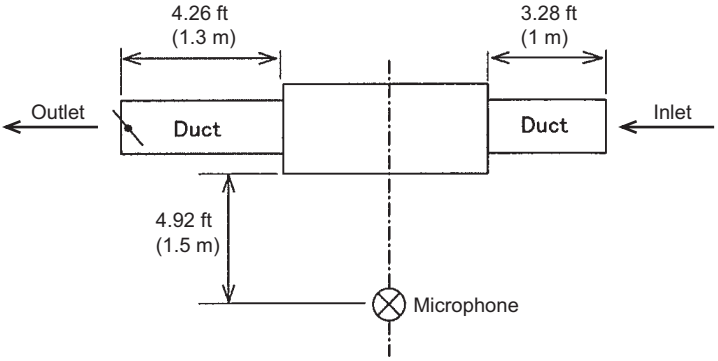


**MMD-AP0074/0094BH2UL**

| Sound pressure level (dB (A)) | H - M - L |
|---|---|
| | 34-30.5-27.5 |

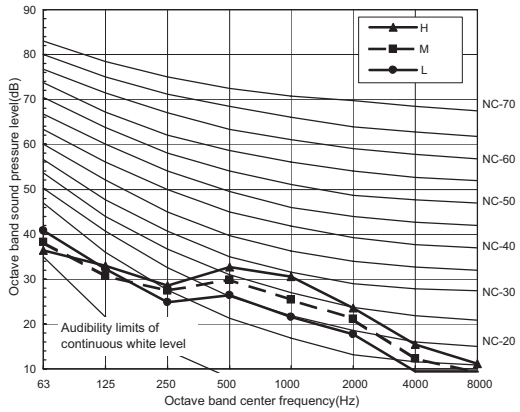


**MMD-AP0124BH2UL**

| Sound pressure level (dB (A)) | H - M - L |
|---|---|
| | 34.5-32-31 |

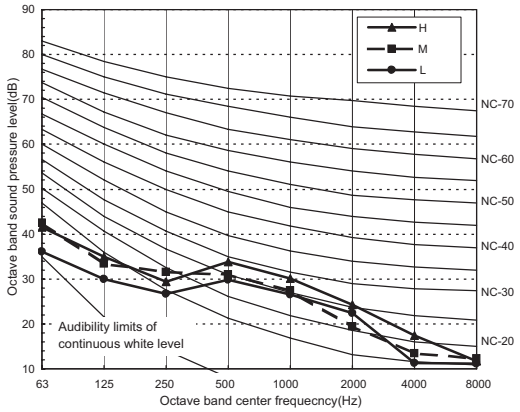


**MMD-AP0154/0184BH2UL**

| Sound pressure level (dB (A)) | H - M - L |
|---|---|
| | 37.5-35.5-29 |

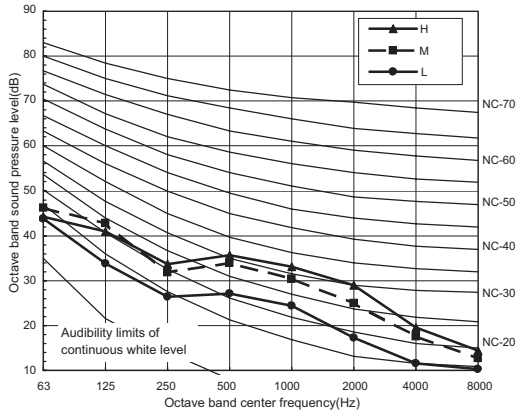


**MMD-AP0214/0244/0304BH2UL**

| Sound pressure level (dB (A)) | H - M - L |
|---|---|
| | 35-33-31 |

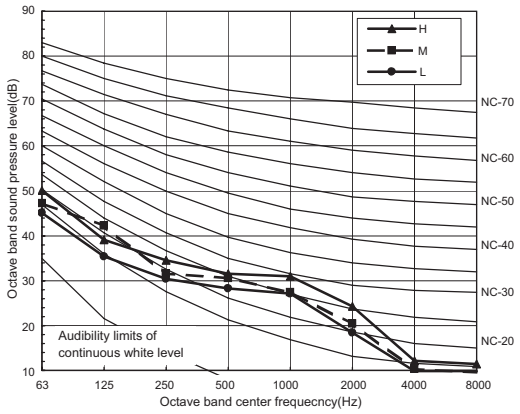

**MMD-AP0364BH2UL**

| Sound pressure level (dB (A)) | H - M - L |
|---|---|
| | 38-35.5-34.5 |

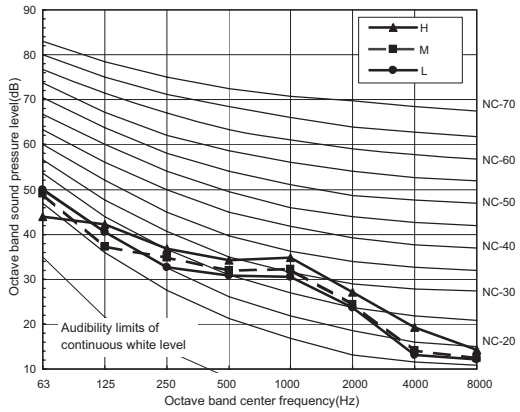


**MMD-AP0424/0484BH2UL**

| Sound pressure level (dB (A)) | H - M - L |
|---|---|
| | 41-38.5-36 |

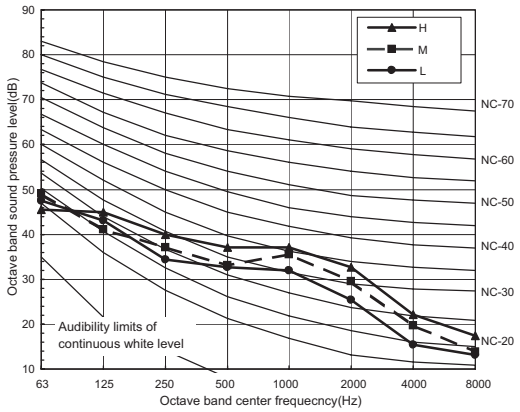

## 9. Accessory

**Optional part for Medium Static Ducted type**

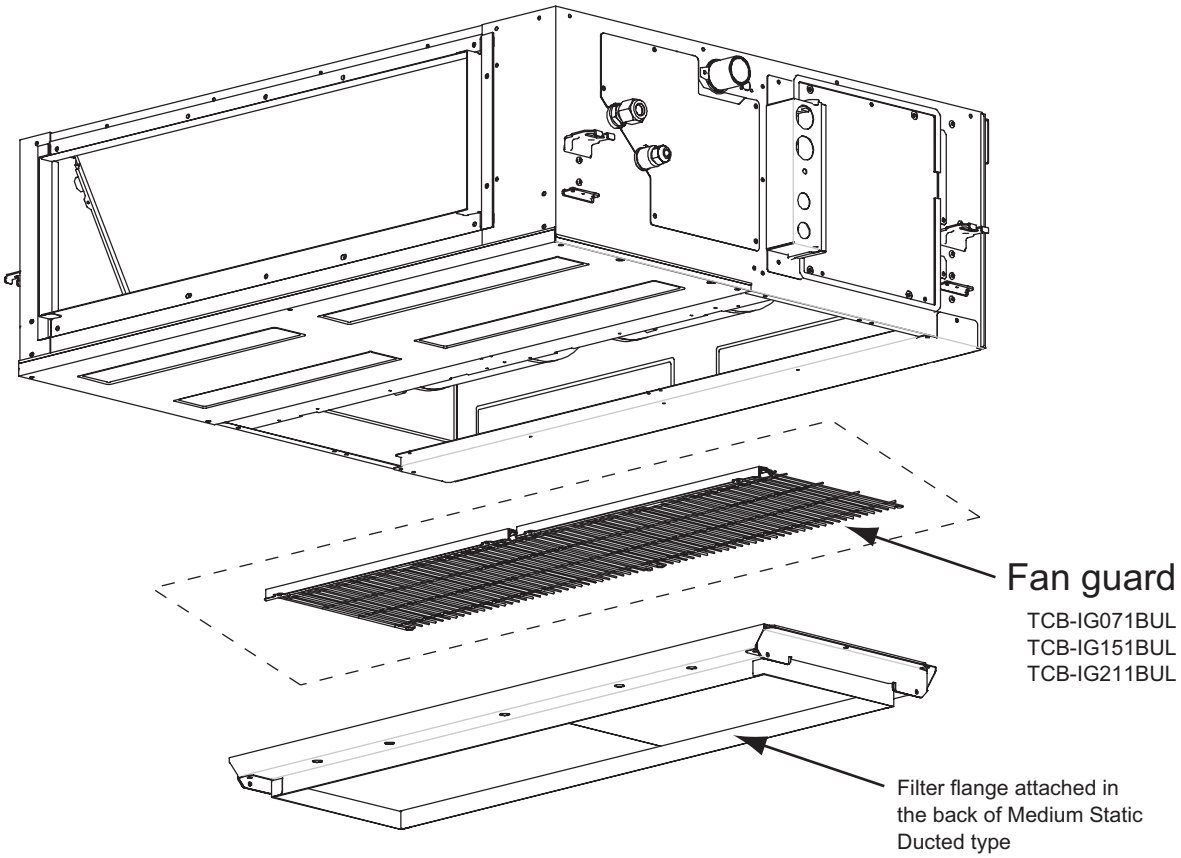


| Parts Name | Model name | Applied Model | Note |
|---|---|---|---|
| Fan guard | TCB-IG071BUL | MMD-AP0074 to 0124BH2UL | For underside suction |
| | TCB-IG151BUL | MMD-AP0154 to 0184BH2UL | |
| | TCB-IG211BUL | MMD-AP0214 to 0484BH2UL | |

6-2-6. High Static Ducted type

# High Static Ducted type

**MMD-AP0304H2UL**

**MMD-AP0364H2UL**

**MMD-AP0484H2UL**

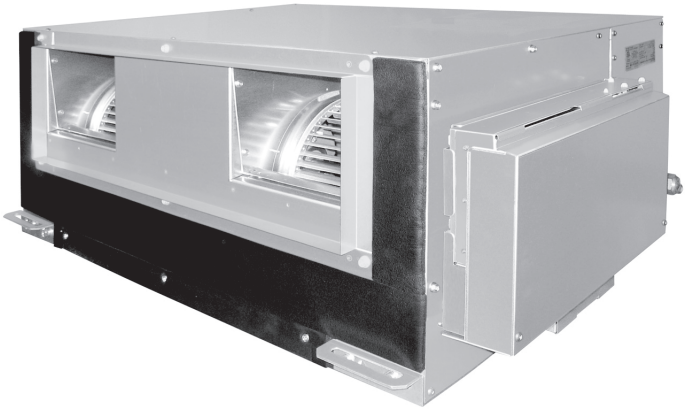

## Contents

1. Specifications
2. Dimension
3. Wiring diagram
4. Center of Gravity
5. Electrical current characteristics
6. Sensible capacity table
7. Fan characteristics
8. Sound characteristics (NC-Curve)

# 1. Specifications

## Concealed Duct High Static Pressure type

| Model name | | | MMD- | AP0304H2UL | AP0364H2UL | AP0484H2UL |
|---|---|---|---|---|---|---|
| Cooling Capacity | | | kBtu/h | 30 | 36 | 48 |
| Heating Capacity | | | kBtu/h | 34 | 40 | 54 |
| Electrical charastaristics | Power supply | | | 230V(208/230V) 1phase 60Hz | | |
| | Power consumption (208/230V) | | kW | 0.38/0.41 | 0.38/0.41 | 0.35/0.41 |
| Appearance | | | | Zinc hot dipping steel plate | | |
| Dimension | Unit | Height | In | 15.0 | | |
| | | Width | In | 33.5 | | 47.2 |
| | | Depth | In | 26.0 | | |
| | Packing | Height | In | 17.0 | | |
| | | Width | In | 42.6 | | 56.4 |
| | | Depth | In | 31.9 | | |
| Total weight | Unit | | lb | 128 | | 154 |
| | Packed unit | | lb | 141 | | 176 |
| Heat exchanger | | | | Finned tube | | |
| Fan unit | Fan | | | Centrifugal fan | | |
| | Standard air flow | | cfm | 926 | | 1235 |
| | Motor | | W | 260 | | |
| | External static pressure (*1) | Factory setting (208/230V) | In WG | 0.641/0.814 | | 0.296/0.519 |
| | | 208V (High tap/Mid tap/Low tap) (*3) | In WG | 1.075 - 0.641 - 0.287 | | 0.606 - 0.296 - Non |
| | | 230V (High tap/Mid tap/Low tap) (*3) | In WG | 1.175 - 0.814 - 0.506 | | 0.801 - 0.519 - 0.114 |
| | Air flow limt | Lower limit | cfm | 755.2 | | 988.2 |
| | | Upper limit | cfm | 1132.8 | | 1447.1 |
| Air filter | | | | Field supply | | |
| Connecting pipe | Gas side | | In | 5/8" | | |
| | Liquid side | | In | 3/8" | | |
| | Drain port (Nominal dia.) | | In | VP25(Polyvinyl chloride tube: External Dia.1-1/4 Internal Dia.1) | | |
| Sound puressure level (*2) | | 208V (High tap/Mid tap/Low tap) (*3) | dB(A) | 49.5/45/41 | | 47/44/- |
| | | 230V (High tap/Mid tap/Low tap) (*3) | dB(A) | 51/47/43 | | 49/46/43 |

Note
(*1) Non attached filter
(*2) The actual values in an external opeating environment are generally higher than the indicated values due to the contribution from ambient noise.
(*3) The tap is set by wire connection change of fan motor.

## 2. Dimension

MMD-AP0304H2UL, AP0364H2UL

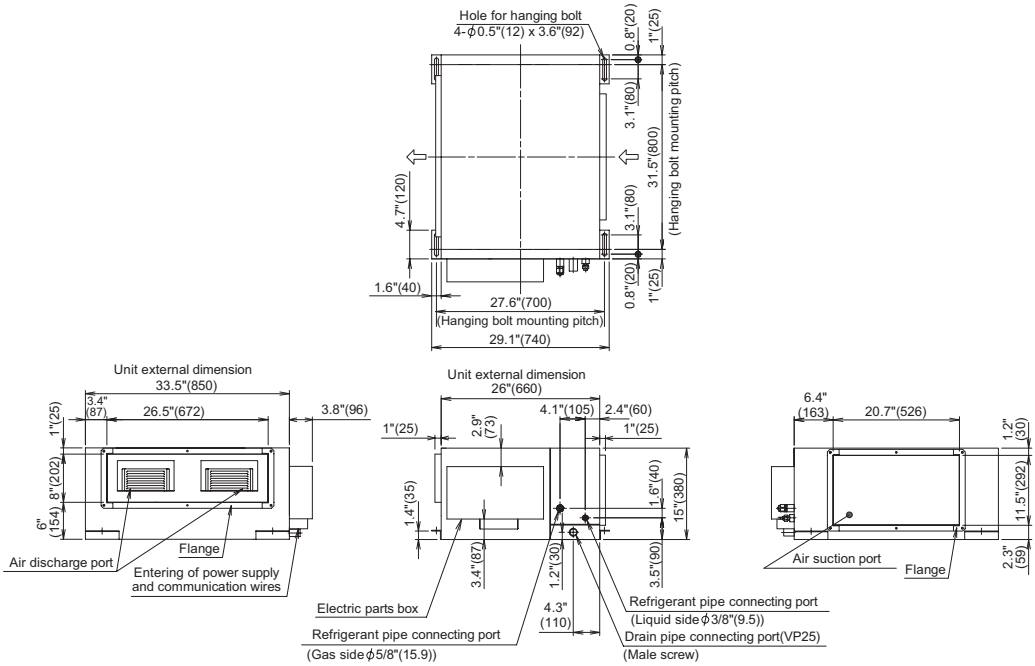


MMD-AP0484H2UL

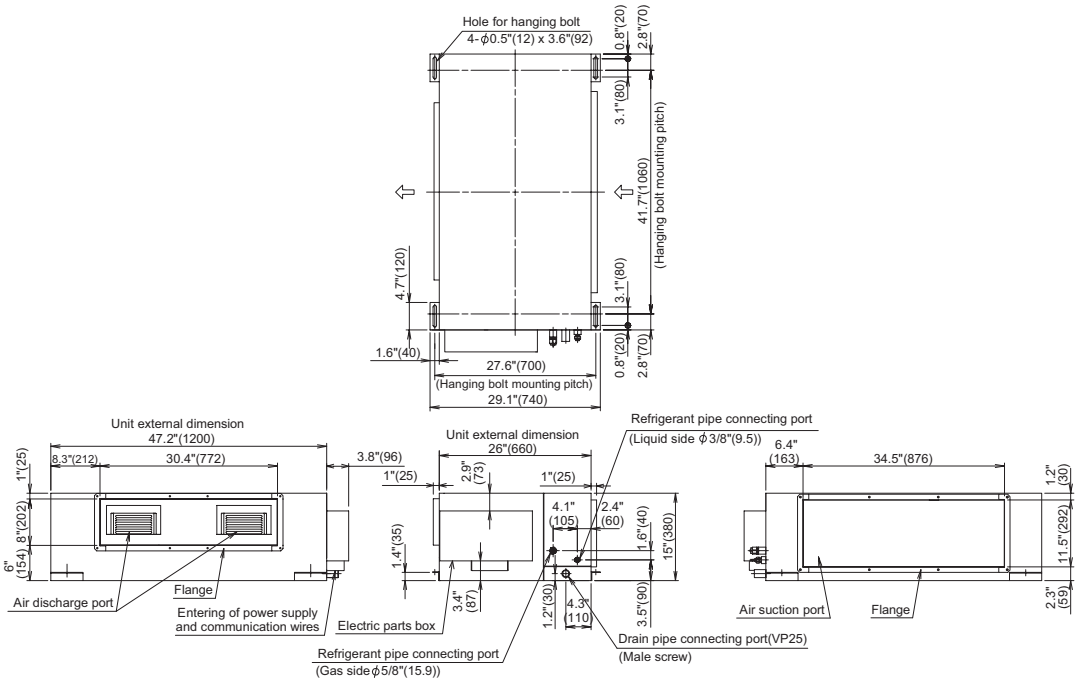


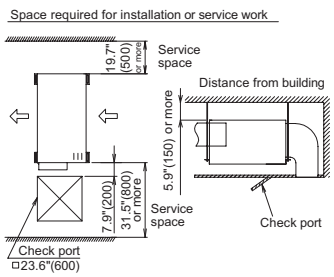


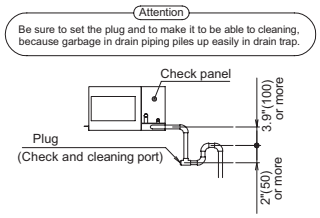


<Note>
1. Indoor unit does not have air filter its inside. So be sure to set an air filter (local arrangements) in the position maintained easily such as a suction grills. (If there is no air filter, dusts are blocked in the air heat exchanger and it may cause failure or water leak in air-conditioner.)
2. Leave sufficient space to remove the air filter when you attach it.

## 3. Wiring diagram

MMD-AP0304H2UL, AP0364H2UL, AP0484H2UL

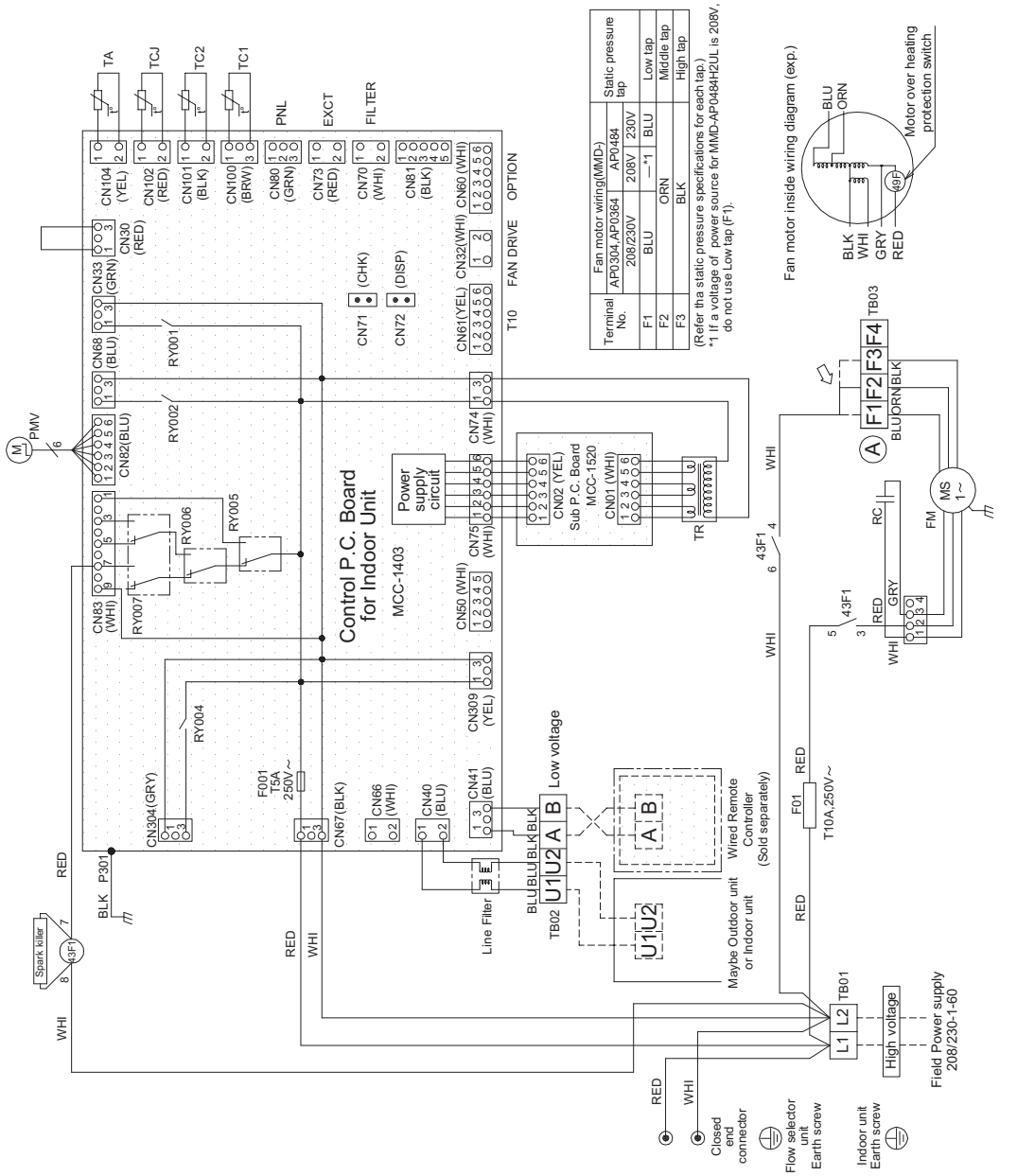


| Symbol | Parts Name |
|---|---|
| 43F1 | Fan motor Control Relay |
| CN** | Connector |
| F01 | Fuse |
| F001 | Fuse |
| FM | Fan Motor |
| PMV | Pulse Motor Valve |
| RC | Running Capacitor |
| RY005,006,007 | Fan Motor Control Relay |
| TA | Indoor temp sensor |
| TB01,02,03 | Terminal Block |
| TC1,TC2,TCJ | Temp sensor |
| TR | Transformer |

1. Broken line indicate the wiring at site. Long dashed short dashed line indicate the accessories.
2. ☐ indicates the terminal block.
   —○— indicates the connection terminal.
   ○ ○ indicates the connector on the control P.C. board.
3. ⏚ indicates the protection ground.
4. ▭ indicates the control P.C. board.
5. Ⓐ position is connected to terminal block when change to static pressure. exchange the lead wire of arrow( ⇨ ) position after check the terminal number as figure and lead wire's color of fan motor.

COLOR IDENTIFICATION
RED : RED GRY : GRAY
WHI : WHITE PNK : PINK
YEL : YELLOW ORN : ORANGE
BLU : BLUE BRW : BROWN
BLK : BLACK GRN : GREEN

## 4. Center of Gravity

| Model name | X (In) | Y (In) | Z (In) | Total weight (lb) |
|---|---|---|---|---|
| MMD-AP0304H2UL<br>MMD-AP0364H2UL | 11.4 | 17.7 | 7.7 | 128 |
| MMD-AP0484H2UL | 11.4 | 25.4 | 7.7 | 154 |

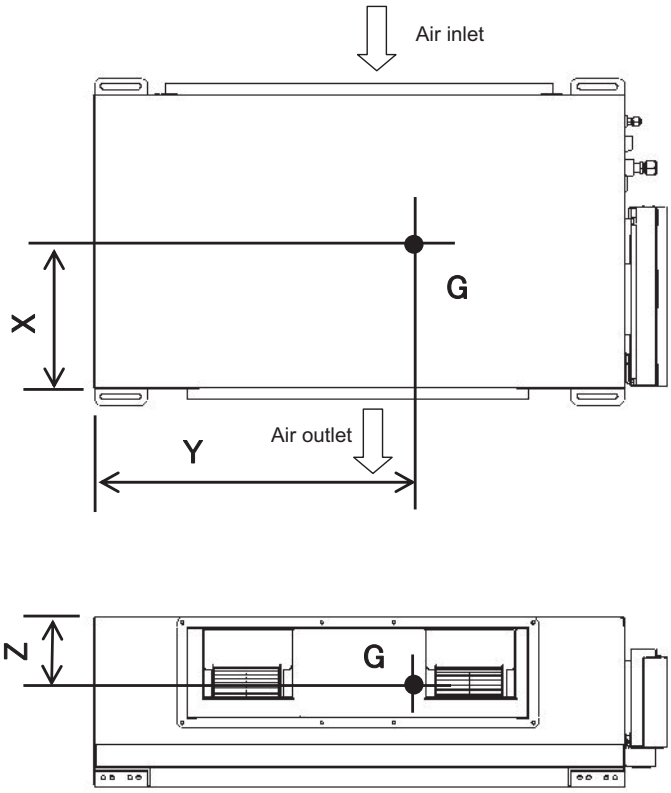


## 5. Electrical current characteristics

| Type | Model | Nominal Voltage (V-Ph-Hz) | Voltage Range (V) | | Power consumption | FLA | MCA | MOCP |
|---|---|---|---|---|---|---|---|---|
| | | | Min | Max | kW | A | A | A |
| High Static Ducted type | MMD-AP0304H2UL | 208/230-1-60 | 187 | 253 | 0.38/0.41 | 2.34 | 2.93 | 15 |
| | MMD-AP0364H2UL | 208/230-1-60 | 187 | 253 | 0.38/0.41 | 2.34 | 2.93 | 15 |
| | MMD-AP0484H2UL | 208/230-1-60 | 187 | 253 | 0.35/0.41 | 2.92 | 3.65 | 15 |

MCA : Minimum Circuit Amps
FLA : Full Load Amps
MOCP : Maximum Overcurrent Protection (Amps)

## 6. Sensible capacity table

High Static Ducted type (MMD-AP***4H2UL)

TC: Total capacity [Btu/h] SHC: Sensible capacity [Btu/h]

| unit size | outdoor air temp. °FDB | indoor air temp. | | | | | | | | | | | | | |
|---|---|---|---|---|---|---|---|---|---|---|---|---|---|---|---|
| | | 59°FWB | | 61°FWB | | 64°FWB | | 67°FWB | | 68°FWB | | 72°FWB | | 75°FWB | |
| | | 71°FDB | | 73°FDB | | 77°FDB | | 80°FDB | | 82°FDB | | 86°FDB | | 90°FDB | |
| | | TC | SHC | TC | SHC | TC | SHC | TC | SHC | TC | SHC | TC | SHC | TC | SHC |
| 030 | 50 | 24630 | 19550 | 27240 | 20820 | 29100 | 22120 | 30000 | 22050 | 30900 | 22050 | 32700 | 21850 | 34200 | 21340 |
| | 54 | 24630 | 19550 | 27240 | 20820 | 29100 | 22120 | 30000 | 22050 | 30900 | 22050 | 32700 | 21850 | 34200 | 21340 |
| | 57 | 24630 | 19550 | 27240 | 20820 | 29100 | 22120 | 30000 | 22050 | 30900 | 22050 | 32700 | 21850 | 34200 | 21340 |
| | 61 | 24630 | 19550 | 27240 | 20820 | 29100 | 22120 | 30000 | 22050 | 30900 | 22050 | 32700 | 21850 | 34200 | 21340 |
| | 64 | 24630 | 19550 | 27240 | 20820 | 29100 | 22120 | 30000 | 22050 | 30900 | 22050 | 32700 | 21850 | 34200 | 21340 |
| | 68 | 24630 | 19550 | 27240 | 20820 | 29100 | 22120 | 30000 | 22050 | 30900 | 22050 | 32700 | 21850 | 34200 | 21340 |
| | 70 | 24630 | 19550 | 27240 | 20820 | 29100 | 22120 | 30000 | 22050 | 30900 | 22050 | 32700 | 21850 | 34200 | 21340 |
| | 73 | 24630 | 19550 | 27240 | 20820 | 29100 | 22120 | 30000 | 22050 | 30900 | 22050 | 32700 | 21850 | 34200 | 21340 |
| | 77 | 24630 | 19550 | 27240 | 20820 | 29100 | 22120 | 30000 | 22050 | 30900 | 22050 | 32700 | 21850 | 34200 | 21340 |
| | 81 | 24630 | 19550 | 27240 | 20820 | 29100 | 22120 | 30000 | 22050 | 30900 | 22050 | 32700 | 21850 | 34200 | 21340 |
| | 84 | 24630 | 19550 | 27240 | 20820 | 29100 | 22120 | 30000 | 22050 | 30900 | 22050 | 32700 | 21850 | 34200 | 21340 |
| | 88 | 24630 | 19550 | 27240 | 20820 | 29100 | 22120 | 30000 | 22050 | 30900 | 22050 | 32700 | 21850 | 34200 | 21340 |
| | 91 | 24630 | 19550 | 27240 | 20820 | 29100 | 22120 | 30000 | 22050 | 30900 | 22050 | 32700 | 21850 | 34200 | 21340 |
| | 95 | 24630 | 19550 | 27240 | 20820 | 29100 | 22120 | 30000 | 22050 | 30900 | 22050 | 32700 | 21850 | 34200 | 21340 |
| | 99 | 23920 | 18980 | 26450 | 20220 | 28260 | 21480 | 29130 | 21410 | 30000 | 21410 | 31750 | 21220 | 33210 | 20720 |
| | 102 | 23350 | 18530 | 25820 | 19740 | 27590 | 20970 | 28440 | 20900 | 29290 | 20900 | 31000 | 20710 | 32420 | 20230 |
| 036 | 50 | 29560 | 23310 | 32690 | 24820 | 34920 | 26360 | 36000 | 26280 | 37080 | 26280 | 39240 | 26040 | 41040 | 25430 |
| | 54 | 29560 | 23310 | 32690 | 24820 | 34920 | 26360 | 36000 | 26280 | 37080 | 26280 | 39240 | 26040 | 41040 | 25430 |
| | 57 | 29560 | 23310 | 32690 | 24820 | 34920 | 26360 | 36000 | 26280 | 37080 | 26280 | 39240 | 26040 | 41040 | 25430 |
| | 61 | 29560 | 23310 | 32690 | 24820 | 34920 | 26360 | 36000 | 26280 | 37080 | 26280 | 39240 | 26040 | 41040 | 25430 |
| | 64 | 29560 | 23310 | 32690 | 24820 | 34920 | 26360 | 36000 | 26280 | 37080 | 26280 | 39240 | 26040 | 41040 | 25430 |
| | 68 | 29560 | 23310 | 32690 | 24820 | 34920 | 26360 | 36000 | 26280 | 37080 | 26280 | 39240 | 26040 | 41040 | 25430 |
| | 70 | 29560 | 23310 | 32690 | 24820 | 34920 | 26360 | 36000 | 26280 | 37080 | 26280 | 39240 | 26040 | 41040 | 25430 |
| | 73 | 29560 | 23310 | 32690 | 24820 | 34920 | 26360 | 36000 | 26280 | 37080 | 26280 | 39240 | 26040 | 41040 | 25430 |
| | 77 | 29560 | 23310 | 32690 | 24820 | 34920 | 26360 | 36000 | 26280 | 37080 | 26280 | 39240 | 26040 | 41040 | 25430 |
| | 81 | 29560 | 23310 | 32690 | 24820 | 34920 | 26360 | 36000 | 26280 | 37080 | 26280 | 39240 | 26040 | 41040 | 25430 |
| | 84 | 29560 | 23310 | 32690 | 24820 | 34920 | 26360 | 36000 | 26280 | 37080 | 26280 | 39240 | 26040 | 41040 | 25430 |
| | 88 | 29560 | 23310 | 32690 | 24820 | 34920 | 26360 | 36000 | 26280 | 37080 | 26280 | 39240 | 26040 | 41040 | 25430 |
| | 91 | 29560 | 23310 | 32690 | 24820 | 34920 | 26360 | 36000 | 26280 | 37080 | 26280 | 39240 | 26040 | 41040 | 25430 |
| | 95 | 29560 | 23310 | 32690 | 24820 | 34920 | 26360 | 36000 | 26280 | 37080 | 26280 | 39240 | 26040 | 41040 | 25430 |
| | 99 | 28700 | 22630 | 31740 | 24100 | 33910 | 25600 | 34960 | 25520 | 36000 | 25520 | 38100 | 25280 | 39850 | 24690 |
| | 102 | 28020 | 22100 | 30990 | 23530 | 33100 | 24990 | 34130 | 24910 | 35150 | 24910 | 37200 | 24690 | 38910 | 24110 |
| 048 | 50 | 39410 | 32770 | 43580 | 34900 | 46560 | 37070 | 48000 | 36960 | 49440 | 36960 | 52320 | 36620 | 54720 | 35770 |
| | 54 | 39410 | 32770 | 43580 | 34900 | 46560 | 37070 | 48000 | 36960 | 49440 | 36960 | 52320 | 32810 | 54720 | 35770 |
| | 57 | 39410 | 32770 | 43580 | 34900 | 46560 | 37070 | 48000 | 36960 | 49440 | 36960 | 52320 | 32810 | 54720 | 35770 |
| | 61 | 39410 | 32770 | 43580 | 34900 | 46560 | 37070 | 48000 | 36960 | 49440 | 36960 | 52320 | 32810 | 54720 | 35770 |
| | 64 | 39410 | 32770 | 43580 | 34900 | 46560 | 37070 | 48000 | 36960 | 49440 | 36960 | 52320 | 32810 | 54720 | 35770 |
| | 68 | 39410 | 32770 | 43580 | 34900 | 46560 | 37070 | 48000 | 36960 | 49440 | 36960 | 52320 | 32810 | 54720 | 35770 |
| | 70 | 39410 | 32770 | 43580 | 34900 | 46560 | 37070 | 48000 | 36960 | 49440 | 36960 | 52320 | 32810 | 54720 | 35770 |
| | 73 | 39410 | 32770 | 43580 | 34900 | 46560 | 37070 | 48000 | 36960 | 49440 | 36960 | 52320 | 32810 | 54720 | 35770 |
| | 77 | 39410 | 32770 | 43580 | 34900 | 46560 | 37070 | 48000 | 36960 | 49440 | 36960 | 52320 | 32810 | 54720 | 35770 |
| | 81 | 39410 | 32770 | 43580 | 34900 | 46560 | 37070 | 48000 | 36960 | 49440 | 36960 | 52320 | 32810 | 54720 | 35770 |
| | 84 | 39410 | 32770 | 43580 | 34900 | 46560 | 37070 | 48000 | 36960 | 49440 | 36960 | 52320 | 32810 | 54720 | 35770 |
| | 88 | 39410 | 32770 | 43580 | 34900 | 46560 | 37070 | 48000 | 36960 | 49440 | 36960 | 52320 | 32810 | 54720 | 35770 |
| | 91 | 39410 | 32770 | 43580 | 34900 | 46560 | 37070 | 48000 | 36960 | 49440 | 36960 | 52320 | 32810 | 54720 | 35770 |
| | 95 | 39410 | 32770 | 43580 | 34900 | 46560 | 37070 | 48000 | 36960 | 49440 | 36960 | 52320 | 36620 | 54720 | 35770 |
| | 99 | 38270 | 31820 | 42320 | 33890 | 45210 | 35990 | 46610 | 35890 | 48010 | 35890 | 50800 | 35560 | 53130 | 34730 |
| | 102 | 37360 | 31070 | 41310 | 33090 | 44140 | 35140 | 45500 | 35040 | 46870 | 35040 | 49600 | 34720 | 51870 | 33910 |

# 7. Fan characteristics

MMD-AP0304H2UL, AP0364H2UL

Power source : 208V/60Hz

| tap | External static pressure (in.WG) | Standard air flow rate (cfm) |
|---|---|---|
| High | 1.075 | 926 |
| Middle | 0.641 | |
| Low | 0.287 | |

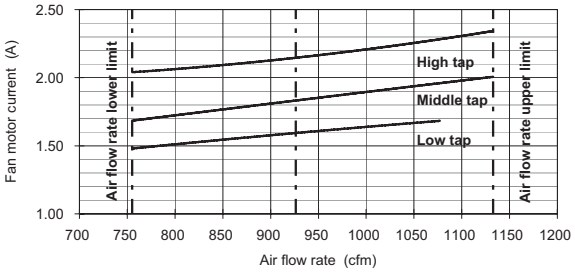


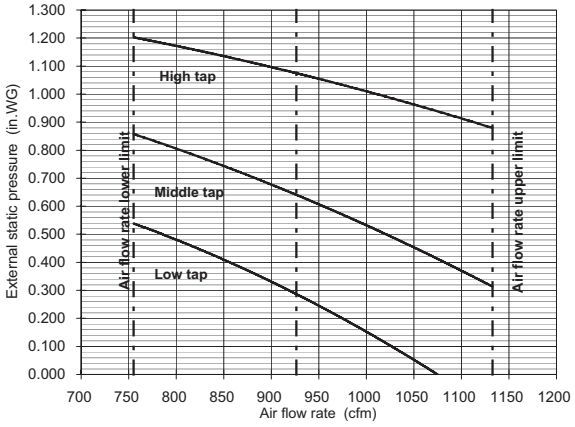


Power source : 230V/60Hz

| tap | External static pressure (in.WG) | Standard air flow rate (cfm) |
|---|---|---|
| High | 1.175 | 926 |
| Middle | 0.814 | |
| Low | 0.506 | |

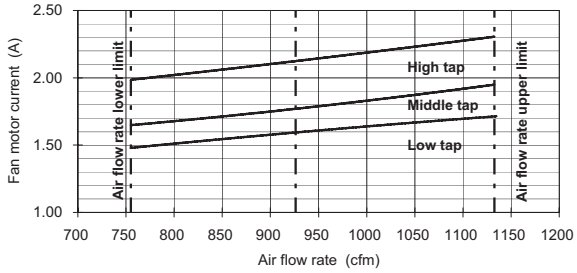


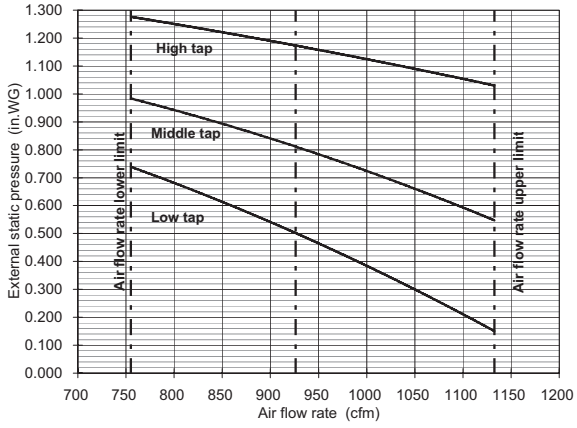


MMD-AP0484H2UL

Power source : 208V/60Hz

| tap | External static pressure (in.WG) | Standard air flow rate (cfm) |
|---|---|---|
| High | 0.606 | 1235 |
| Middle | 0.296 | |
| Low | — | |

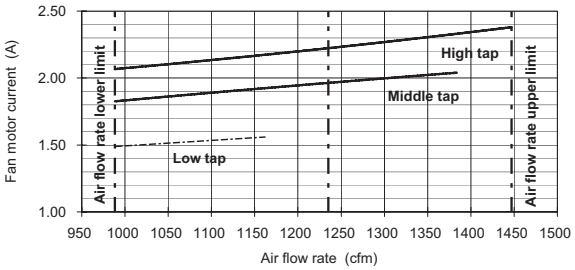


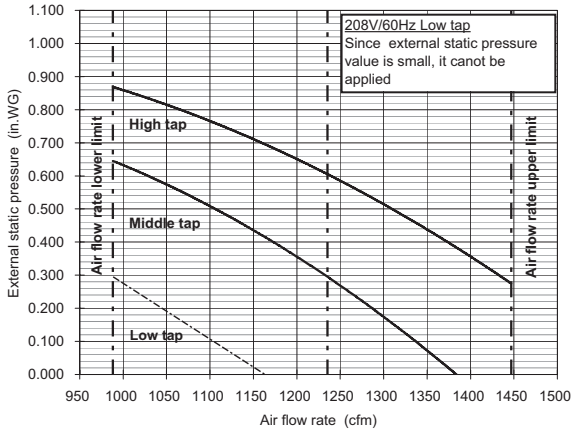


Power source : 230V/60Hz

| tap | External static pressure (in.WG) | Standard air flow rate (cfm) |
|---|---|---|
| High | 0.801 | 1235 |
| Middle | 0.519 | |
| Low | 0.114 | |

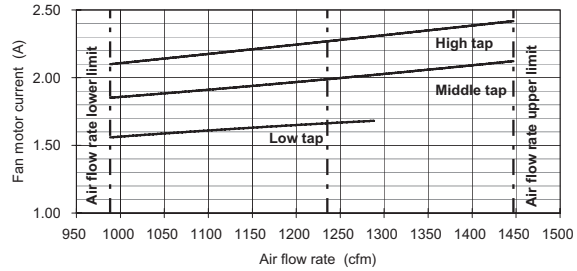


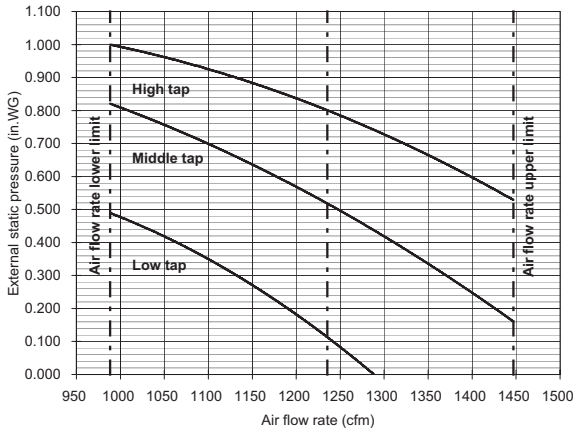

## 8. Sound characteristics (NC-Curve)

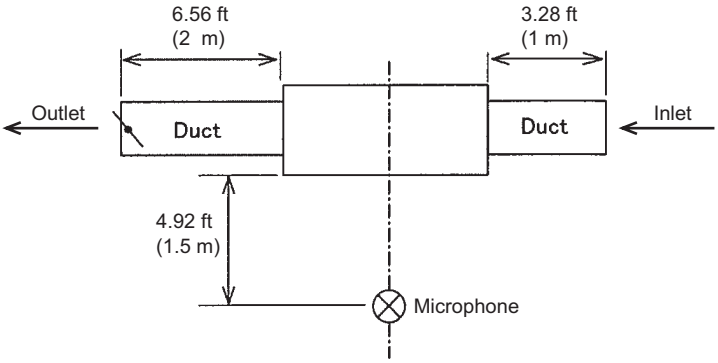


MMU-AP0304H2UL, AP0364H2UL (208V)

| Fan tap | H | M | L |
|---|---|---|---|
| Sound pressure level (dB(A)) | 49.5 | 45 | 41 |

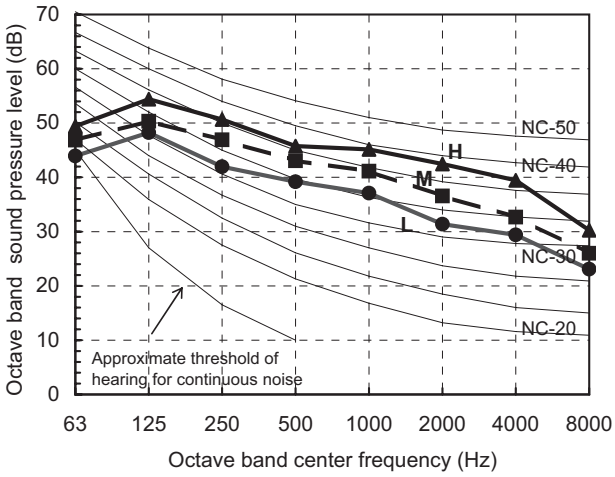


MMU-AP0304H2UL, AP0364H2UL (230V)

| Fan tap | H | M | L |
|---|---|---|---|
| Sound pressure level (dB(A)) | 51 | 47 | 43 |

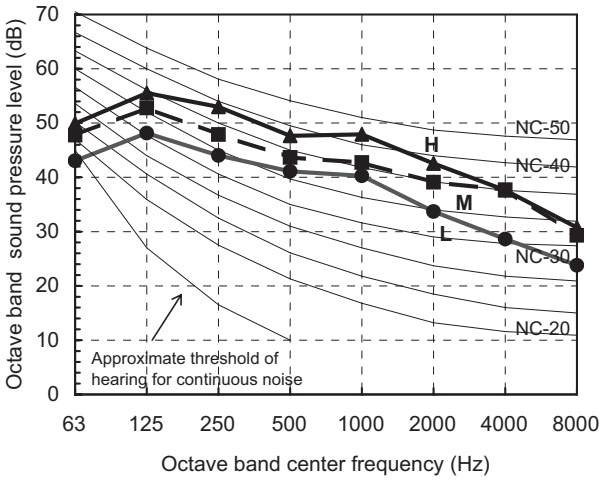


MMU-AP0484H2UL (208V)

| Fan tap | H | M | L |
|---|---|---|---|
| Sound pressure level (dB(A)) | 47 | 44 | - |

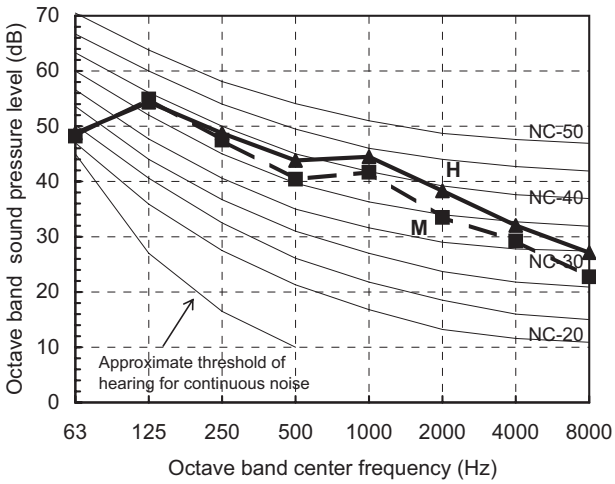


MMU-AP0484H2UL (230V)

| Fan tap | H | M | L |
|---|---|---|---|
| Sound pressure level (dB(A)) | 49 | 46 | 43 |

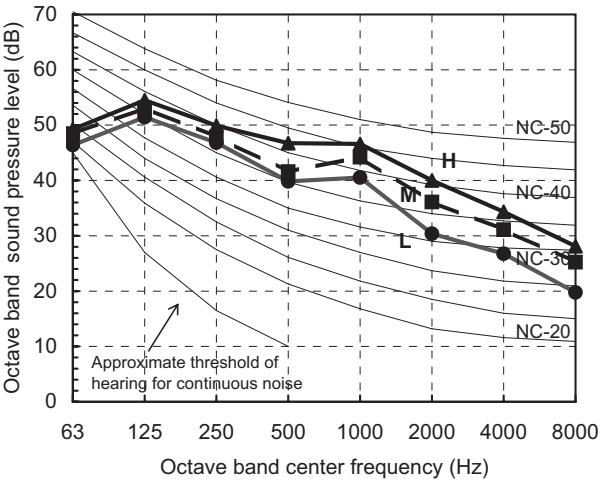

6-2-7. Slim Ducted type

# Slim Ducted type

**MMD-AP0074SPH2UL**
**MMD-AP0094SPH2UL**
**MMD-AP0124SPH2UL**
**MMD-AP0154SPH2UL**
**MMD-AP0184SPH2UL**

## Contents

1. Specifications
2. Dimension
3. Wiring diagram
4. Center of Gravity
5. Electrical current characteristics
6. Sensible capacity table
7. Fan characteristics (No filter)
8. Sound characteristics (NC-Curve)
9. Fresh air intake (Design guide)
10. Accessory

# 1. Specifications

## Slim Ducted type

| Model name | | | MMD- | AP0074SPH2UL | AP0094SPH2UL | AP0124SPH2UL | AP0154SPH2UL | AP0184SPH2UL |
|---|---|---|---|---|---|---|---|---|
| Cooling Capacity | | | kBtu/h | 7.5 | 9.5 | 12 | 15.4 | 18 |
| Heating Capacity | | | kBtu/h | 8.5 | 10.5 | 13.5 | 17 | 20 |
| Electrical charastaristics | Power supply | | | 230V(208/230V) 1phase 60Hz | | | | |
| | Power consumption | | kW | 0.043 | 0.043 | 0.048 | 0.061 | 0.071 |
| Appearance | | | | Zinc hot dipping steel plate | | | | |
| Dimension | Unit | Height | In | 8.3 | | | | |
| | | Width | In | 33.3 | | | | |
| | | Depth | In | 25.4 | | | | |
| | Packing | Height | In | 10.5 | | | | |
| | | Width | In | 41 | | | | |
| | | Depth | In | 30.3 | | | | |
| Total weight | Unit | | lb | 49 | | | 51 | |
| | Packed unit | | lb | 57 | | | 60 | |
| Heat exchanger | | | | Finned tube | | | | |
| Fan unit | Fan | | | Centrifugal fan | | | | |
| | Standard air flow (High/Mid/Low) | | cfm | 318/276/235 | | 353/306/265 | 406/353/306 | 459/400/341 |
| | Motor | | W | 60 | 60 | 60 | 60 | 60 |
| | External static pressure (*1) | | In WG | 0.08 (Factory setting) - 0.14 -0.20 | 0.08 (Factory setting) - 0.14 -0.20 | 0.08 (Factory setting) - 0.14 -0.20 | 0.08 (Factory setting) - 0.14 -0.20 | 0.08 (Factory setting) - 0.14 -0.20 |
| Air filter | | | | Field supply | | | | |
| Connecting pipe | Gas side | | In | 3/8" | 3/8" | 3/8" | 1/2" | 1/2" |
| | Liquid side | | In | 1/4" | 1/4" | 1/4" | 1/4" | 1/4" |
| | Drain port (Nominal dia.) | | In | VP25(Polyvinyl chloride tube: External Dia.1-1/4 Internal Dia.1) | | | | |
| Sound puressure level (*2) (High/Mid/Low) | | Under air inlet | dB(A) | 39/36/33 | | 41/38/35 | 41/38.5/35 | 44.5/41/37.5 |
| | | Back air inlet | dB(A) | 31/30/28 | | 32.5/31.5/28.5 | 34.5/33.5/30 | 37/34/32 |
| Option parts | Auxiliary fresh air frange | | | TCB-FF101URUL | | | | |

Note
(*1) Non attached filter
(*2) The actual values in an external operating environment are generally higher than the indicated values due to the contribution from ambient noise.

## 2. Dimension

MMD-AP0074SPH2UL, AP0094SPH2UL, AP0124SPH2UL, AP0154SPH2UL, AP0184SPH2UL

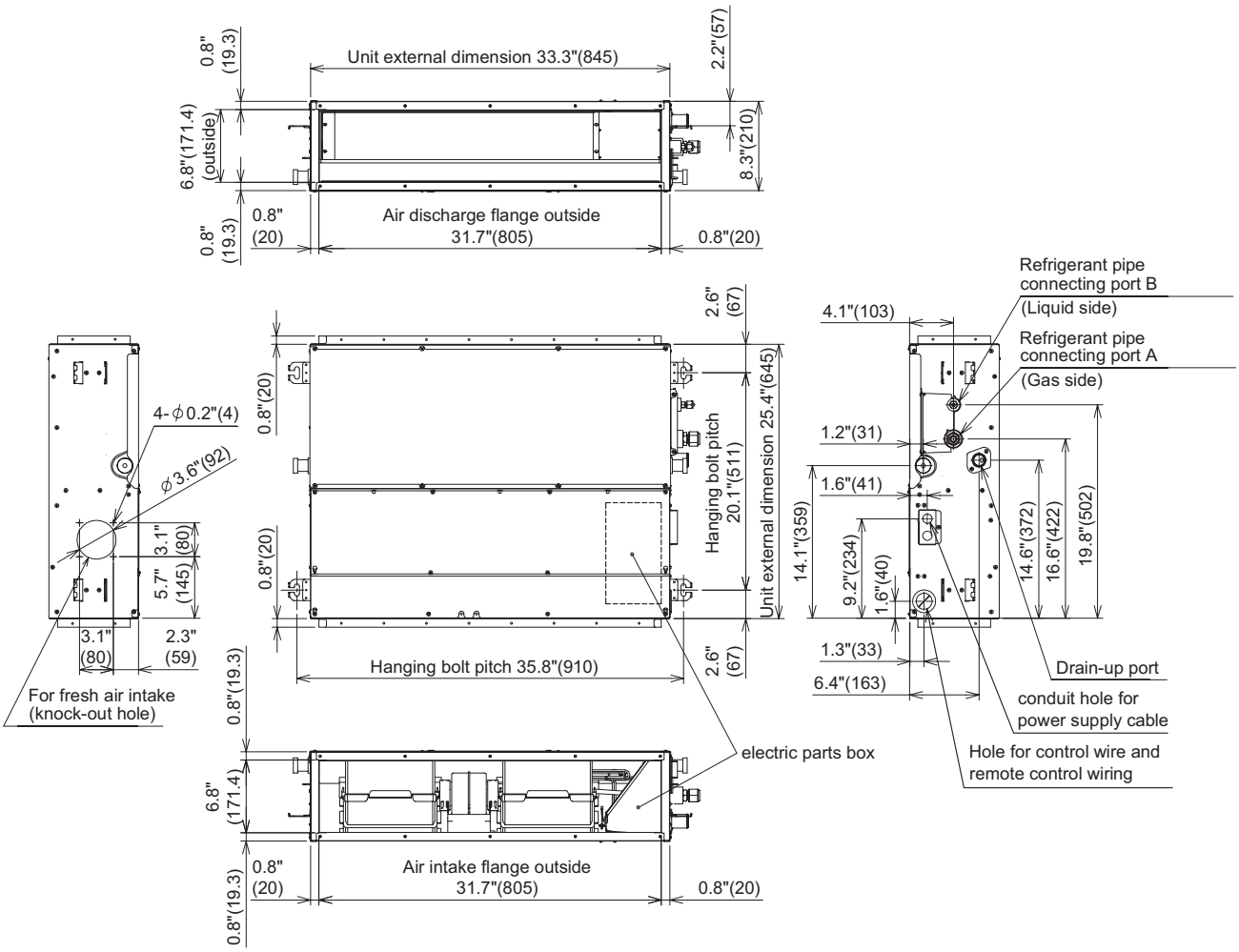


Installation space

Note)
1. Indoor unit does not have air filter its inside.
So be sure to set an air filter(local arrangements) in the position maintained easily such as a suction grills.
(If there is no air filter, dusts are blocked in the air heat exchanger and it may cause failure or water leak in air-conditioner.)
2. Leave sufficient space to remove the air filter when you attach it.

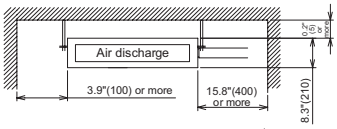


<Under air intake>

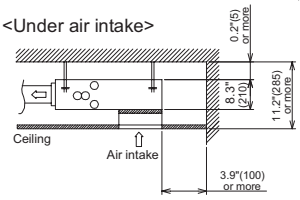


<Back air intake>

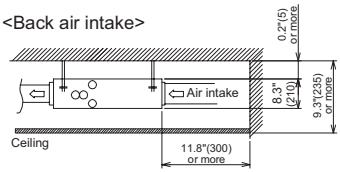


Unit : in(mm)

| Model MMD- | A | B |
|---|---|---|
| AP0074SPH2UL<br>AP0094SPH2UL<br>AP0124SPH2UL | Ø3/8"<br>(9.5) | Ø1/4"<br>(6.4) |
| AP0154SPH2UL<br>AP0184SPH2UL | Ø1/2"<br>(12.7) | Ø1/4"<br>(6.4) |

Service space

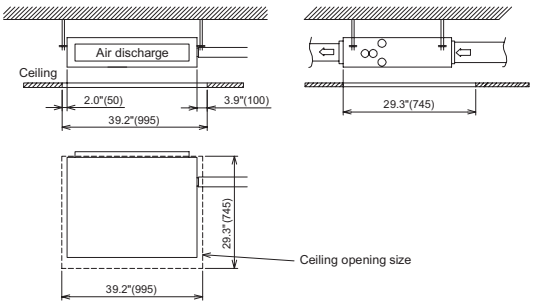


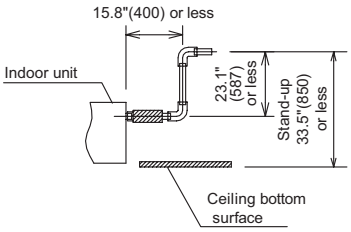


Drain-up standing-up size

Note)
As ABS is used for the drain discharge port of the main unit,the vinyl chlor paste cannot be used. Use the flexible hose (Band fix) included in the package.

## 3. Wiring diagram

MMD-AP0074SPH2UL, AP0094SPH2UL, AP0124SPH2UL, AP0154SPH2UL, AP0184SPH2UL

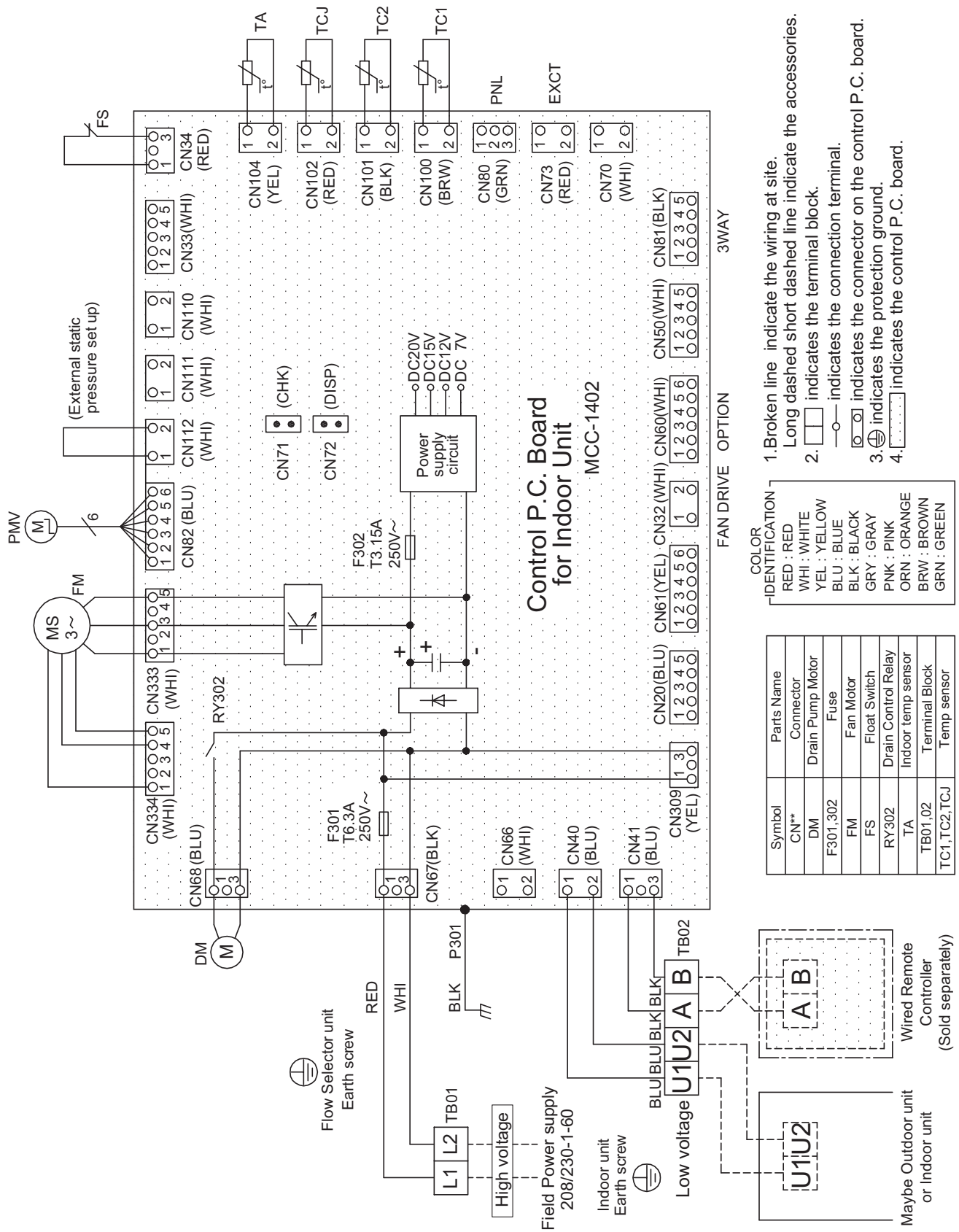

## 4. Center of Gravity

| Model name | X (In) | Y (In) | Z (In) | Total weight (lb) |
|---|---|---|---|---|
| MMD-AP0074SPH2UL<br>MMD-AP0094SPH2UL<br>MMD-AP0124SPH2UL | 12.4 | 18.5 | 4.3 | 49 |
| MMD-AP0154SPH2UL<br>MMD-AP0184SPH2UL | 12.4 | 18.1 | 4.3 | 51 |

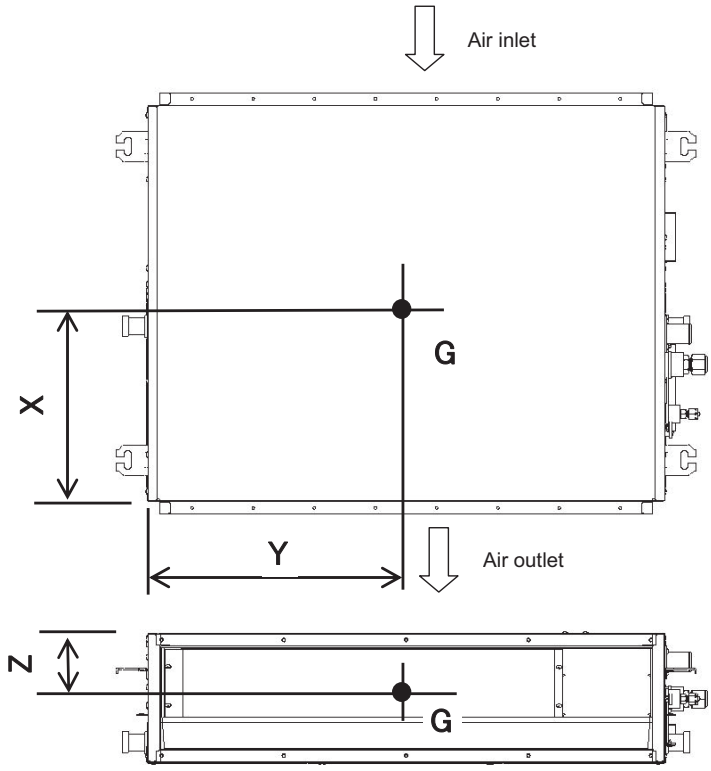


## 5. Electrical current characteristics

| Type | Model | Nominal Voltage (V-Ph-Hz) | Voltage Range (V) | | Power consumption | FLA | MCA | MOCP |
|---|---|---|---|---|---|---|---|---|
| | | | Min | Max | kW | A | A | A |
| Slim Ducted type | MMD-AP0074SPH2UL | 208/230-1-60 | 187 | 253 | 0.043 | 0.58 | 0.73 | 15 |
| | MMD-AP0094SPH2UL | 208/230-1-60 | 187 | 253 | 0.043 | 0.58 | 0.73 | 15 |
| | MMD-AP0124SPH2UL | 208/230-1-60 | 187 | 253 | 0.048 | 0.60 | 0.75 | 15 |
| | MMD-AP0154SPH2UL | 208/230-1-60 | 187 | 253 | 0.061 | 0.70 | 0.88 | 15 |
| | MMD-AP0184SPH2UL | 208/230-1-60 | 187 | 253 | 0.071 | 0.80 | 1.00 | 15 |

MCA : Minimum Circuit Amps
MOCP : Maximum Overcurrent Protection (Amps)
FLA : Full Load Amps

## 6. Sensible capacity table

Slim Ducted type (MMD-AP***4SPH2UL)

TC: Total capacity [Btu/h] SHC: Sensible capacity [Btu/h]

| unit size | outdoor air temp. °FDB | indoor air temp. | | | | | | | | | | | | | |
|---|---|---|---|---|---|---|---|---|---|---|---|---|---|---|---|
| | | 59°FWB | | 61°FWB | | 64°FWB | | 67°FWB | | 68°FWB | | 72°FWB | | 75°FWB | |
| | | 71°FDB | | 73°FDB | | 77°FDB | | 80°FDB | | 82°FDB | | 86°FDB | | 90°FDB | |
| | | TC | SHC | TC | SHC | TC | SHC | TC | SHC | TC | SHC | TC | SHC | TC | SHC |
| 007 | 50 | 6380 | 5560 | 6680 | 5720 | 7100 | 5950 | 7500 | 6140 | 7630 | 6160 | 8110 | 6080 | 8450 | 5850 |
| | 54 | 6380 | 5560 | 6680 | 5720 | 7100 | 5950 | 7500 | 6140 | 7630 | 6160 | 8110 | 6080 | 8450 | 5850 |
| | 57 | 6380 | 5560 | 6680 | 5720 | 7100 | 5950 | 7500 | 6140 | 7630 | 6160 | 8110 | 6080 | 8450 | 5850 |
| | 61 | 6380 | 5560 | 6680 | 5720 | 7100 | 5950 | 7500 | 6140 | 7630 | 6160 | 8110 | 6080 | 8450 | 5850 |
| | 64 | 6380 | 5560 | 6680 | 5720 | 7100 | 5950 | 7500 | 6140 | 7630 | 6160 | 8110 | 6080 | 8450 | 5850 |
| | 68 | 6380 | 5560 | 6680 | 5720 | 7100 | 5950 | 7500 | 6140 | 7630 | 6160 | 8110 | 6080 | 8450 | 5850 |
| | 70 | 6380 | 5560 | 6680 | 5720 | 7100 | 5950 | 7500 | 6140 | 7630 | 6160 | 8110 | 6080 | 8450 | 5850 |
| | 73 | 6380 | 5560 | 6680 | 5720 | 7100 | 5950 | 7500 | 6140 | 7630 | 6160 | 8110 | 6080 | 8450 | 5850 |
| | 77 | 6380 | 5560 | 6680 | 5720 | 7100 | 5950 | 7500 | 6140 | 7630 | 6160 | 8110 | 6080 | 8450 | 5850 |
| | 81 | 6380 | 5560 | 6680 | 5720 | 7100 | 5950 | 7500 | 6140 | 7630 | 6160 | 8110 | 6080 | 8450 | 5850 |
| | 84 | 6380 | 5560 | 6680 | 5720 | 7100 | 5950 | 7500 | 6140 | 7630 | 6160 | 8110 | 6080 | 8450 | 5850 |
| | 88 | 6380 | 5560 | 6680 | 5720 | 7100 | 5950 | 7500 | 6140 | 7630 | 6160 | 8110 | 6080 | 8450 | 5850 |
| | 91 | 6380 | 5560 | 6680 | 5720 | 7100 | 5950 | 7500 | 6140 | 7630 | 6160 | 8110 | 6080 | 8450 | 5850 |
| | 95 | 6380 | 5560 | 6680 | 5720 | 7100 | 5950 | 7500 | 6140 | 7630 | 6160 | 8110 | 6080 | 8450 | 5850 |
| | 99 | 6190 | 5400 | 6490 | 5550 | 6890 | 5780 | 7280 | 5960 | 7410 | 5980 | 7870 | 5900 | 8200 | 5680 |
| | 102 | 6050 | 5270 | 6330 | 5420 | 6730 | 5640 | 7110 | 5820 | 7230 | 5840 | 7690 | 5760 | 8010 | 5550 |
| 009 | 50 | 8090 | 6470 | 8460 | 6640 | 9000 | 6920 | 9500 | 7130 | 9660 | 7150 | 10270 | 7060 | 10700 | 6800 |
| | 54 | 8090 | 6470 | 8460 | 6640 | 9000 | 6920 | 9500 | 7130 | 9660 | 7150 | 10270 | 7060 | 10700 | 6800 |
| | 57 | 8090 | 6470 | 8460 | 6640 | 9000 | 6920 | 9500 | 7130 | 9660 | 7150 | 10270 | 7060 | 10700 | 6800 |
| | 61 | 8090 | 6470 | 8460 | 6640 | 9000 | 6920 | 9500 | 7130 | 9660 | 7150 | 10270 | 7060 | 10700 | 6800 |
| | 64 | 8090 | 6470 | 8460 | 6640 | 9000 | 6920 | 9500 | 7130 | 9660 | 7150 | 10270 | 7060 | 10700 | 6800 |
| | 68 | 8090 | 6470 | 8460 | 6640 | 9000 | 6920 | 9500 | 7130 | 9660 | 7150 | 10270 | 7060 | 10700 | 6800 |
| | 70 | 8090 | 6470 | 8460 | 6640 | 9000 | 6920 | 9500 | 7130 | 9660 | 7150 | 10270 | 7060 | 10700 | 6800 |
| | 73 | 8090 | 6470 | 8460 | 6640 | 9000 | 6920 | 9500 | 7130 | 9660 | 7150 | 10270 | 7060 | 10700 | 6800 |
| | 77 | 8090 | 6470 | 8460 | 6640 | 9000 | 6920 | 9500 | 7130 | 9660 | 7150 | 10270 | 7060 | 10700 | 6800 |
| | 81 | 8090 | 6470 | 8460 | 6640 | 9000 | 6920 | 9500 | 7130 | 9660 | 7150 | 10270 | 7060 | 10700 | 6800 |
| | 84 | 8090 | 6470 | 8460 | 6640 | 9000 | 6920 | 9500 | 7130 | 9660 | 7150 | 10270 | 7060 | 10700 | 6800 |
| | 88 | 8090 | 6470 | 8460 | 6640 | 9000 | 6920 | 9500 | 7130 | 9660 | 7150 | 10270 | 7060 | 10700 | 6800 |
| | 91 | 8090 | 6470 | 8460 | 6640 | 9000 | 6920 | 9500 | 7130 | 9660 | 7150 | 10270 | 7060 | 10700 | 6800 |
| | 95 | 8090 | 6470 | 8460 | 6640 | 9000 | 6920 | 9500 | 7130 | 9660 | 7150 | 10270 | 7060 | 10700 | 6800 |
| | 99 | 7860 | 6280 | 8210 | 6450 | 8740 | 6720 | 9220 | 6920 | 9380 | 6940 | 9970 | 6860 | 10390 | 6600 |
| | 102 | 7670 | 6130 | 8020 | 6290 | 8530 | 6560 | 9010 | 6760 | 9160 | 6780 | 9740 | 6690 | 10140 | 6450 |
| 012 | 50 | 10210 | 7550 | 10690 | 7760 | 11360 | 8070 | 12000 | 8330 | 12210 | 8360 | 12980 | 8250 | 13510 | 7940 |
| | 54 | 10210 | 7550 | 10690 | 7760 | 11360 | 8070 | 12000 | 8330 | 12210 | 8360 | 12980 | 8250 | 13510 | 7940 |
| | 57 | 10210 | 7550 | 10690 | 7760 | 11360 | 8070 | 12000 | 8330 | 12210 | 8360 | 12980 | 8250 | 13510 | 7940 |
| | 61 | 10210 | 7550 | 10690 | 7760 | 11360 | 8070 | 12000 | 8330 | 12210 | 8360 | 12980 | 8250 | 13510 | 7940 |
| | 64 | 10210 | 7550 | 10690 | 7760 | 11360 | 8070 | 12000 | 8330 | 12210 | 8360 | 12980 | 8250 | 13510 | 7940 |
| | 68 | 10210 | 7550 | 10690 | 7760 | 11360 | 8070 | 12000 | 8330 | 12210 | 8360 | 12980 | 8250 | 13510 | 7940 |
| | 70 | 10210 | 7550 | 10690 | 7760 | 11360 | 8070 | 12000 | 8330 | 12210 | 8360 | 12980 | 8250 | 13510 | 7940 |
| | 73 | 10210 | 7550 | 10690 | 7760 | 11360 | 8070 | 12000 | 8330 | 12210 | 8360 | 12980 | 8250 | 13510 | 7940 |
| | 77 | 10210 | 7550 | 10690 | 7760 | 11360 | 8070 | 12000 | 8330 | 12210 | 8360 | 12980 | 8250 | 13510 | 7940 |
| | 81 | 10210 | 7550 | 10690 | 7760 | 11360 | 8070 | 12000 | 8330 | 12210 | 8360 | 12980 | 8250 | 13510 | 7940 |
| | 84 | 10210 | 7550 | 10690 | 7760 | 11360 | 8070 | 12000 | 8330 | 12210 | 8360 | 12980 | 8250 | 13510 | 7940 |
| | 88 | 10210 | 7550 | 10690 | 7760 | 11360 | 8070 | 12000 | 8330 | 12210 | 8360 | 12980 | 8250 | 13510 | 7940 |
| | 91 | 10210 | 7550 | 10690 | 7760 | 11360 | 8070 | 12000 | 8330 | 12210 | 8360 | 12980 | 8250 | 13510 | 7940 |
| | 95 | 10210 | 7550 | 10690 | 7760 | 11360 | 8070 | 12000 | 8330 | 12210 | 8360 | 12980 | 8250 | 13510 | 7940 |
| | 99 | 9910 | 7330 | 10380 | 7530 | 11030 | 7840 | 11650 | 8090 | 11860 | 8120 | 12600 | 8010 | 13120 | 7710 |
| | 102 | 9680 | 7160 | 10130 | 7360 | 10770 | 7650 | 11380 | 7900 | 11580 | 7930 | 12310 | 7820 | 12810 | 7530 |

## Slim Ducted type (MMD-AP***4SPH2UL)

TC: Total capacity [Btu/h] SHC: Sensible capacity [Btu/h]

| unit size | outdoor air temp. °FDB | indoor air temp. | | | | | | | | | | | | | |
|---|---|---|---|---|---|---|---|---|---|---|---|---|---|---|---|
| | | 59°FWB | | 61°FWB | | 64°FWB | | 67°FWB | | 68°FWB | | 72°FWB | | 75°FWB | |
| | | 71°FDB | | 73°FDB | | 77°FDB | | 80°FDB | | 82°FDB | | 86°FDB | | 90°FDB | |
| | | TC | SHC | TC | SHC | TC | SHC | TC | SHC | TC | SHC | TC | SHC | TC | SHC |
| 015 | 50 | 13110 | 9930 | 13710 | 10200 | 14580 | 10610 | 15400 | 10950 | 15660 | 10980 | 16660 | 10840 | 17340 | 10430 |
| | 54 | 13110 | 9930 | 13710 | 10200 | 14580 | 10610 | 15400 | 10950 | 15660 | 10980 | 16660 | 10840 | 17340 | 10430 |
| | 57 | 13110 | 9930 | 13710 | 10200 | 14580 | 10610 | 15400 | 10950 | 15660 | 10980 | 16660 | 10840 | 17340 | 10430 |
| | 61 | 13110 | 9930 | 13710 | 10200 | 14580 | 10610 | 15400 | 10950 | 15660 | 10980 | 16660 | 10840 | 17340 | 10430 |
| | 64 | 13110 | 9930 | 13710 | 10200 | 14580 | 10610 | 15400 | 10950 | 15660 | 10980 | 16660 | 10840 | 17340 | 10430 |
| | 68 | 13110 | 9930 | 13710 | 10200 | 14580 | 10610 | 15400 | 10950 | 15660 | 10980 | 16660 | 10840 | 17340 | 10430 |
| | 70 | 13110 | 9930 | 13710 | 10200 | 14580 | 10610 | 15400 | 10950 | 15660 | 10980 | 16660 | 10840 | 17340 | 10430 |
| | 73 | 13110 | 9930 | 13710 | 10200 | 14580 | 10610 | 15400 | 10950 | 15660 | 10980 | 16660 | 10840 | 17340 | 10430 |
| | 77 | 13110 | 9930 | 13710 | 10200 | 14580 | 10610 | 15400 | 10950 | 15660 | 10980 | 16660 | 10840 | 17340 | 10430 |
| | 81 | 13110 | 9930 | 13710 | 10200 | 14580 | 10610 | 15400 | 10950 | 15660 | 10980 | 16660 | 10840 | 17340 | 10430 |
| | 84 | 13110 | 9930 | 13710 | 10200 | 14580 | 10610 | 15400 | 10950 | 15660 | 10980 | 16660 | 10840 | 17340 | 10430 |
| | 88 | 13110 | 9930 | 13710 | 10200 | 14580 | 10610 | 15400 | 10950 | 15660 | 10980 | 16660 | 10840 | 17340 | 10430 |
| | 91 | 13110 | 9930 | 13710 | 10200 | 14580 | 10610 | 15400 | 10950 | 15660 | 10980 | 16660 | 10840 | 17340 | 10430 |
| | 95 | 13110 | 9930 | 13710 | 10200 | 14580 | 10610 | 15400 | 10950 | 15660 | 10980 | 16660 | 10840 | 17340 | 10430 |
| | 99 | 12730 | 9640 | 13310 | 9900 | 14160 | 10300 | 14950 | 10630 | 15210 | 10660 | 16180 | 10530 | 16840 | 10130 |
| | 102 | 12430 | 9410 | 13000 | 9670 | 13820 | 10060 | 14600 | 10380 | 14850 | 10410 | 15790 | 10280 | 16440 | 9890 |
| 018 | 50 | 15320 | 11370 | 16030 | 11680 | 17040 | 12150 | 18000 | 12540 | 18310 | 12580 | 19470 | 12420 | 20270 | 11950 |
| | 54 | 15320 | 11370 | 16030 | 11680 | 17040 | 12150 | 18000 | 12540 | 18310 | 12580 | 19470 | 12420 | 20270 | 11950 |
| | 57 | 15320 | 11370 | 16030 | 11680 | 17040 | 12150 | 18000 | 12540 | 18310 | 12580 | 19470 | 12420 | 20270 | 11950 |
| | 61 | 15320 | 11370 | 16030 | 11680 | 17040 | 12150 | 18000 | 12540 | 18310 | 12580 | 19470 | 12420 | 20270 | 11950 |
| | 64 | 15320 | 11370 | 16030 | 11680 | 17040 | 12150 | 18000 | 12540 | 18310 | 12580 | 19470 | 12420 | 20270 | 11950 |
| | 68 | 15320 | 11370 | 16030 | 11680 | 17040 | 12150 | 18000 | 12540 | 18310 | 12580 | 19470 | 12420 | 20270 | 11950 |
| | 70 | 15320 | 11370 | 16030 | 11680 | 17040 | 12150 | 18000 | 12540 | 18310 | 12580 | 19470 | 12420 | 20270 | 11950 |
| | 73 | 15320 | 11370 | 16030 | 11680 | 17040 | 12150 | 18000 | 12540 | 18310 | 12580 | 19470 | 12420 | 20270 | 11950 |
| | 77 | 15320 | 11370 | 16030 | 11680 | 17040 | 12150 | 18000 | 12540 | 18310 | 12580 | 19470 | 12420 | 20270 | 11950 |
| | 81 | 15320 | 11370 | 16030 | 11680 | 17040 | 12150 | 18000 | 12540 | 18310 | 12580 | 19470 | 12420 | 20270 | 11950 |
| | 84 | 15320 | 11370 | 16030 | 11680 | 17040 | 12150 | 18000 | 12540 | 18310 | 12580 | 19470 | 12420 | 20270 | 11950 |
| | 88 | 15320 | 11370 | 16030 | 11680 | 17040 | 12150 | 18000 | 12540 | 18310 | 12580 | 19470 | 12420 | 20270 | 11950 |
| | 91 | 15320 | 11370 | 16030 | 11680 | 17040 | 12150 | 18000 | 12540 | 18310 | 12580 | 19470 | 12420 | 20270 | 11950 |
| | 95 | 15320 | 11370 | 16030 | 11680 | 17040 | 12150 | 18000 | 12540 | 18310 | 12580 | 19470 | 12420 | 20270 | 11950 |
| | 99 | 14880 | 11040 | 15570 | 11340 | 16550 | 11800 | 17480 | 12180 | 17780 | 12220 | 18910 | 12060 | 19680 | 11600 |
| | 102 | 14520 | 10780 | 15200 | 11070 | 16150 | 11520 | 17060 | 11890 | 17360 | 11930 | 18460 | 11770 | 19220 | 11330 |

## 7. Fan characteristics (No filter)

**MMD-AP0074SPH2UL, AP0094SPH2UL**

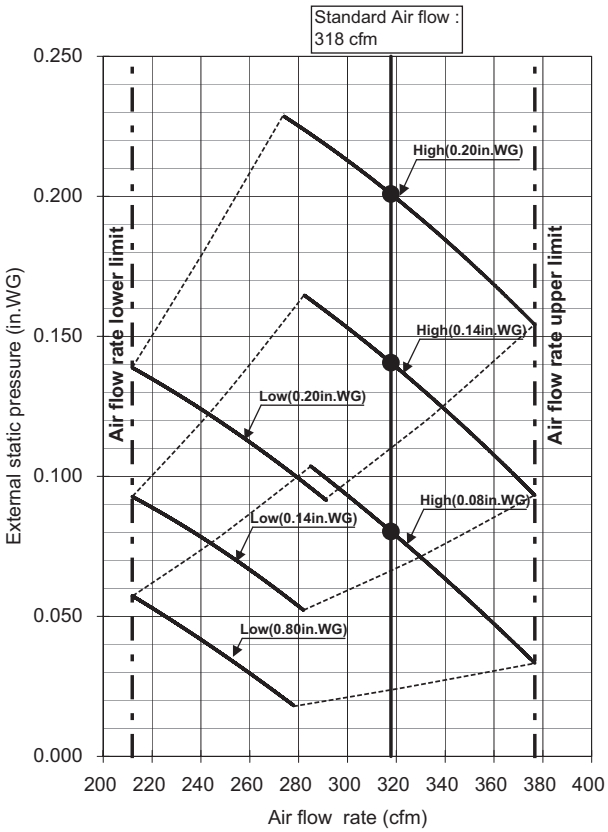


**MMD-AP0124SPH2UL**

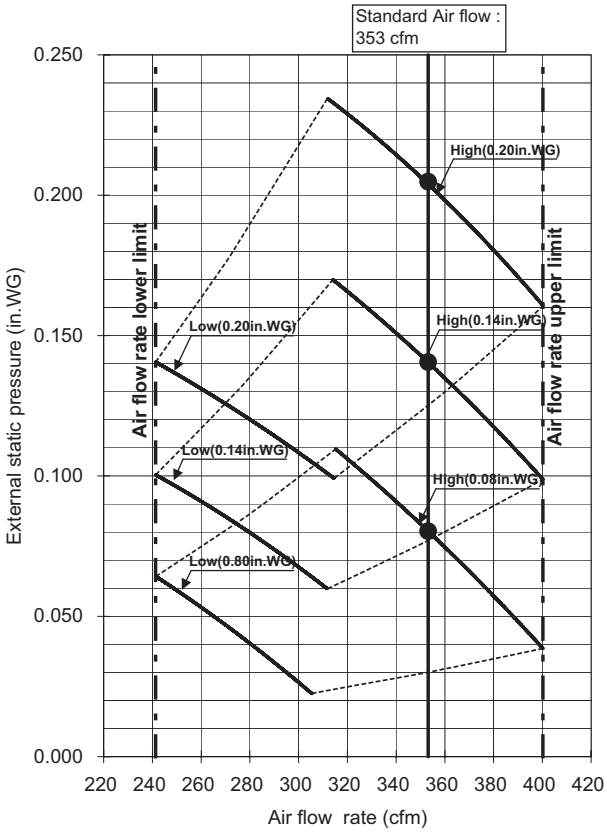


**MMD-AP0154SPH2UL**

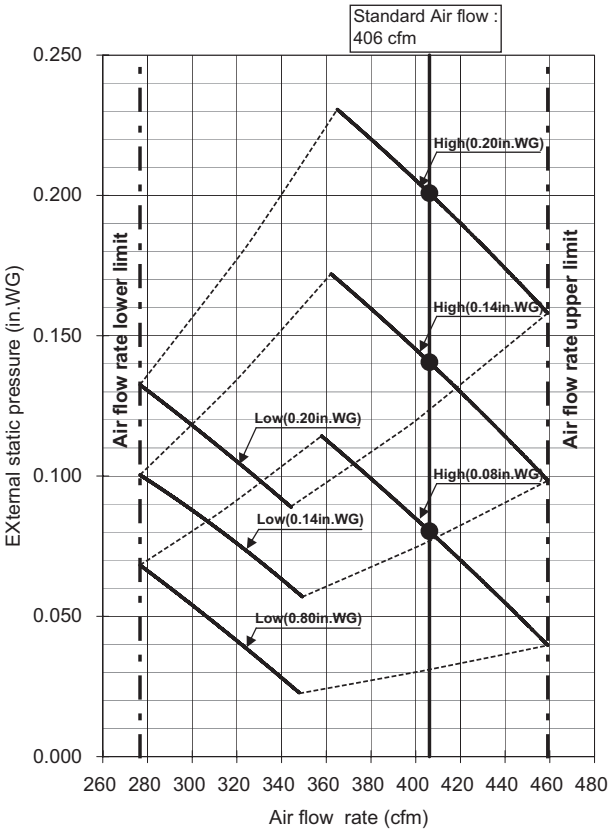


**MMD-AP0184SPH2UL**

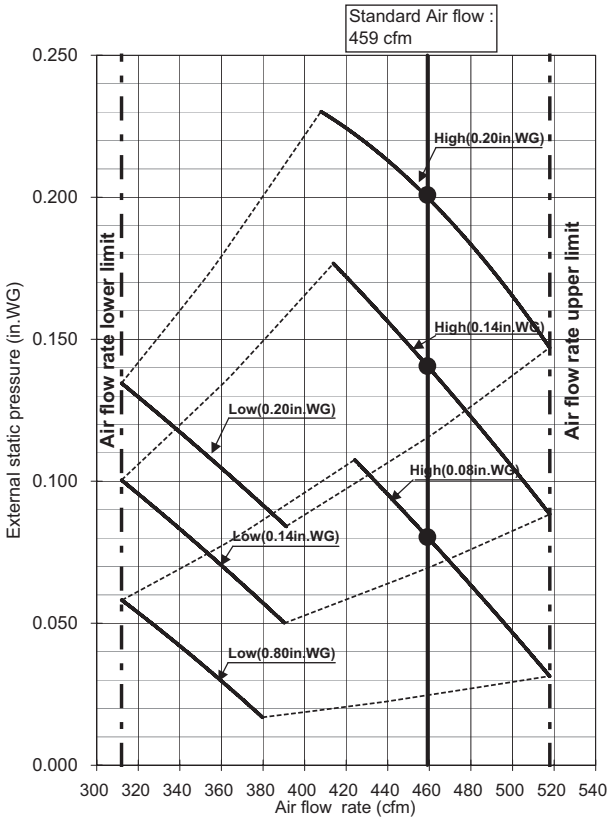

## 8. Sound characteristics (NC-Curve)

MMD-AP0074SPH2UL, MMD-AP0094SPH2UL

[Measuring location] Back air intake

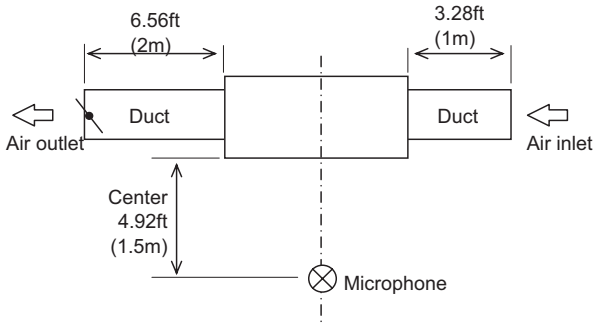


[External static pressure 20Pa]

| Fan tap | H | M | L |
|---|---|---|---|
| Sound pressure level (dB(A)) | 31 | 30 | 28 |

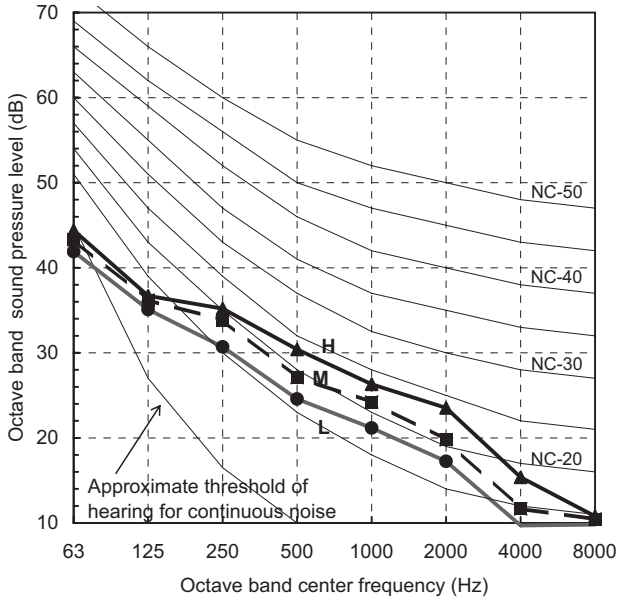


[External static pressure 35Pa]

| Fan tap | H | M | L |
|---|---|---|---|
| Sound pressure level (dB(A)) | 32 | 31 | 29 |

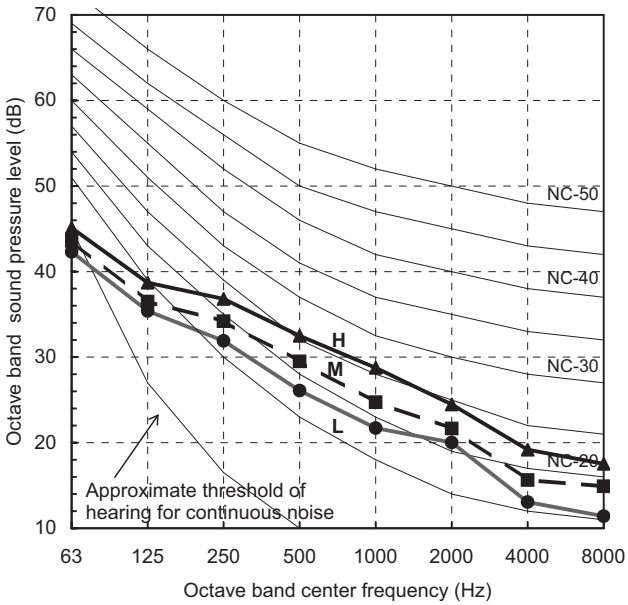


[External static pressure 50Pa]

| Fan tap | H | M | L |
|---|---|---|---|
| Sound pressure level (dB(A)) | 33 | 32 | 30 |

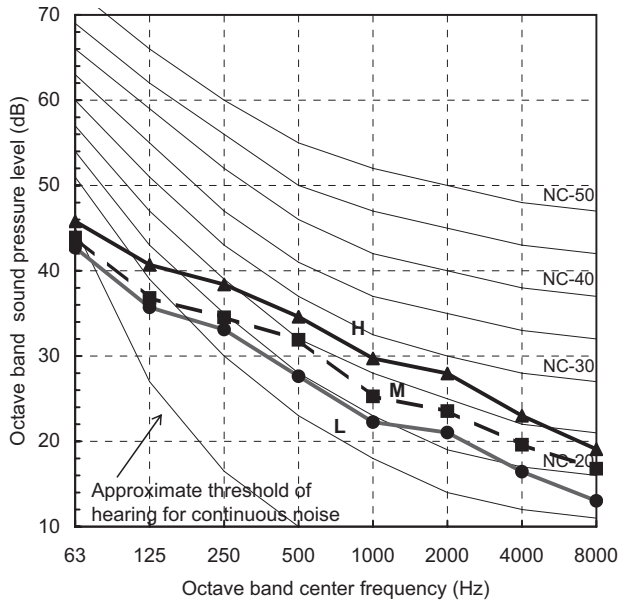

MMD-AP0124SPH2UL

[Measuring location] Back air intake

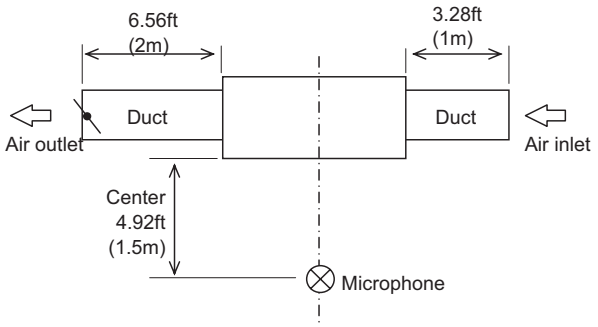


[External static pressure 20Pa]

| Fan tap | H | M | L |
|---|---|---|---|
| Sound pressure level (dB(A)) | 32.5 | 31.5 | 28.5 |

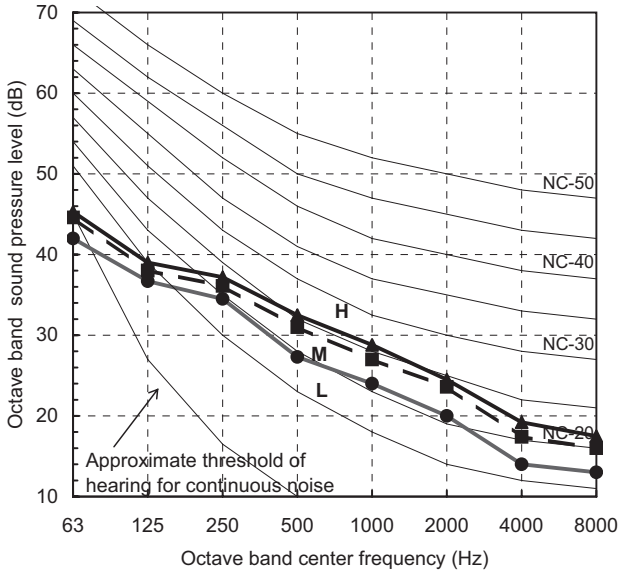


[External static pressure 35Pa]

| Fan tap | H | M | L |
|---|---|---|---|
| Sound pressure level (dB(A)) | 33.5 | 32.5 | 28.5 |

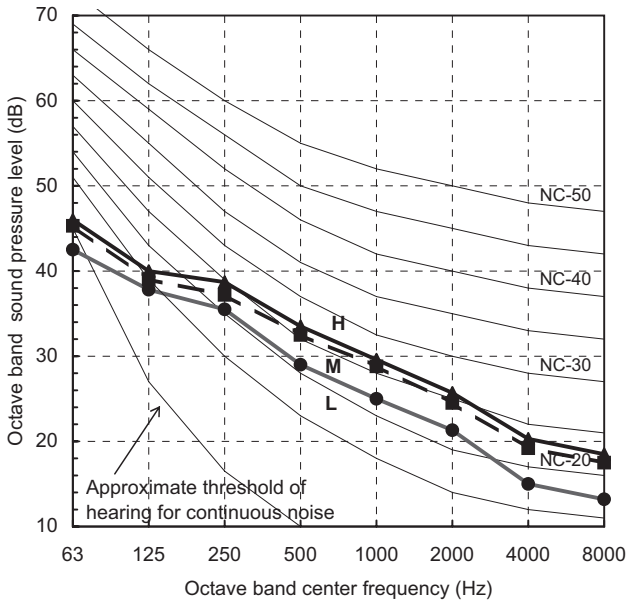


[External static pressure 50Pa]

| Fan tap | H | M | L |
|---|---|---|---|
| Sound pressure level (dB(A)) | 32 | 30 | 28 |

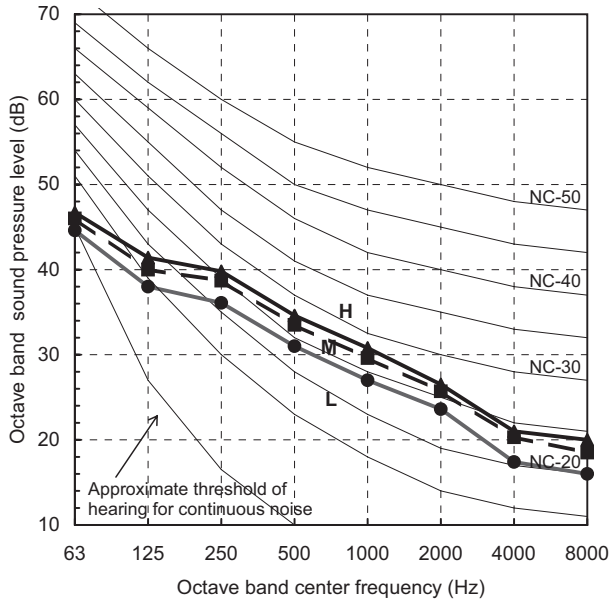

MMD-AP0154SPH2UL

[Measuring location] Back air intake

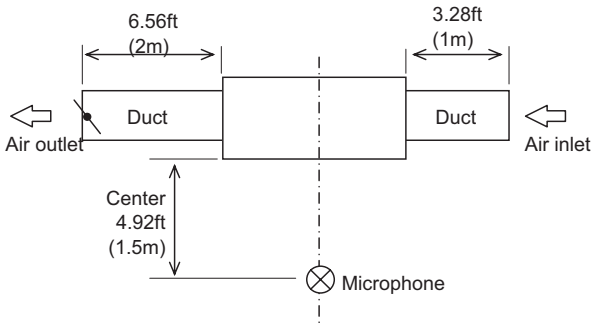


[External static pressure 20Pa]

| Fan tap | H | M | L |
|---|---|---|---|
| Sound pressure level (dB(A)) | 34.5 | 33.5 | 30 |

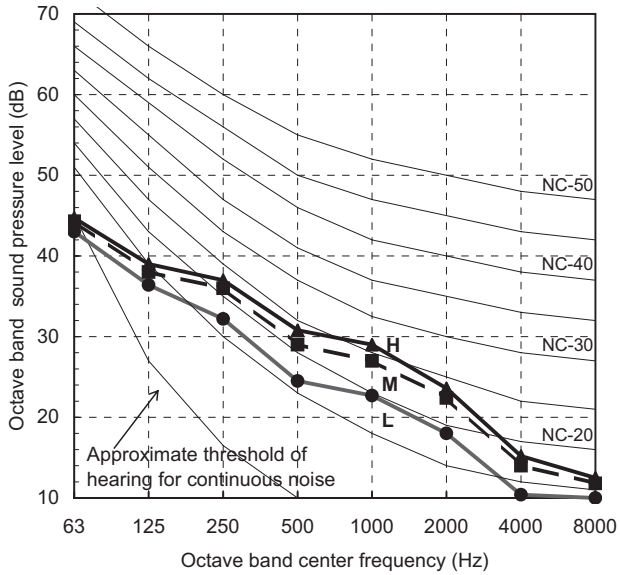


[External static pressure 35Pa]

| Fan tap | H | M | L |
|---|---|---|---|
| Sound pressure level (dB(A)) | 35.5 | 34.5 | 31 |

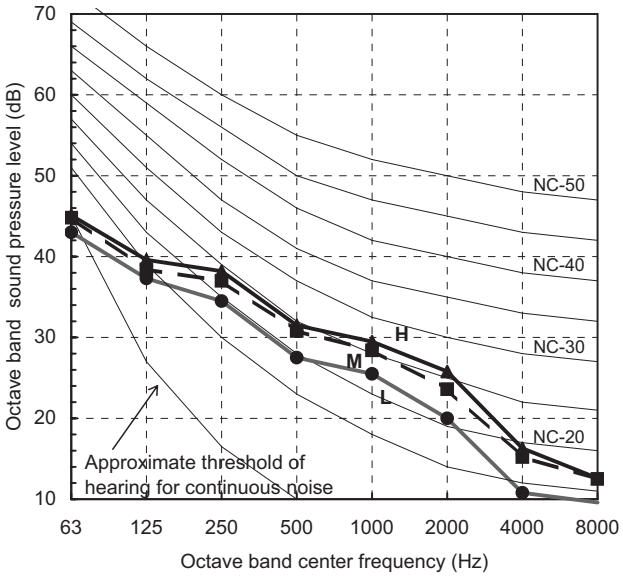


[External static pressure 50Pa]

| Fan tap | H | M | L |
|---|---|---|---|
| Sound pressure level (dB(A)) | 36.5 | 35.5 | 32 |

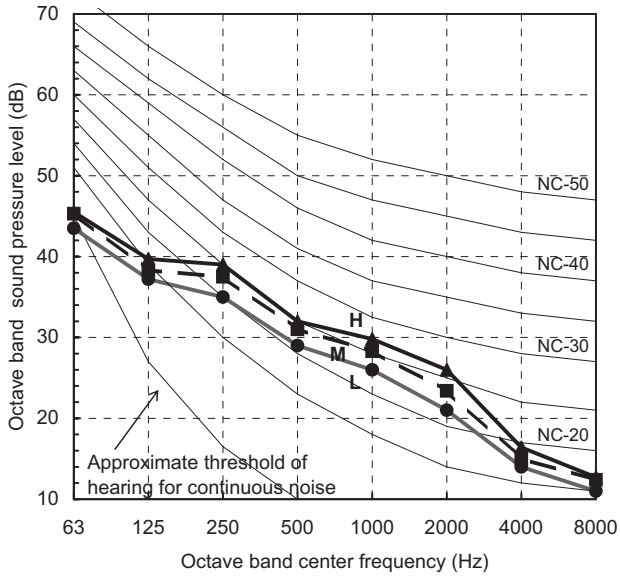

MMD-AP0184SPH2UL

[Measuring location] Back air intake

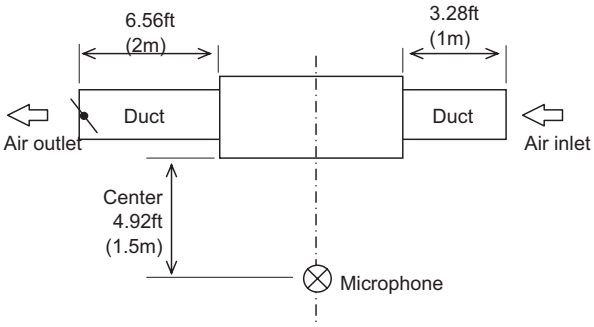


[External static pressure 20Pa]

| Fan tap | H | M | L |
|---|---|---|---|
| Sound pressure level (dB(A)) | 37 | 34 | 32 |

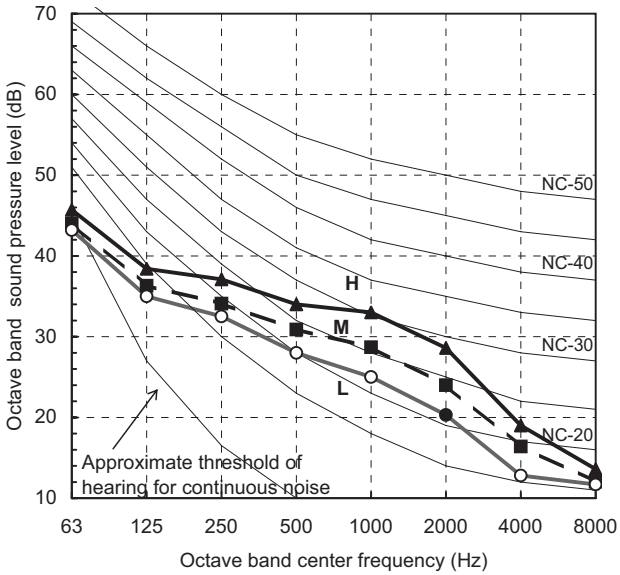


[External static pressure 35Pa]

| Fan tap | H | M | L |
|---|---|---|---|
| Sound pressure level (dB(A)) | 38 | 35 | 33 |

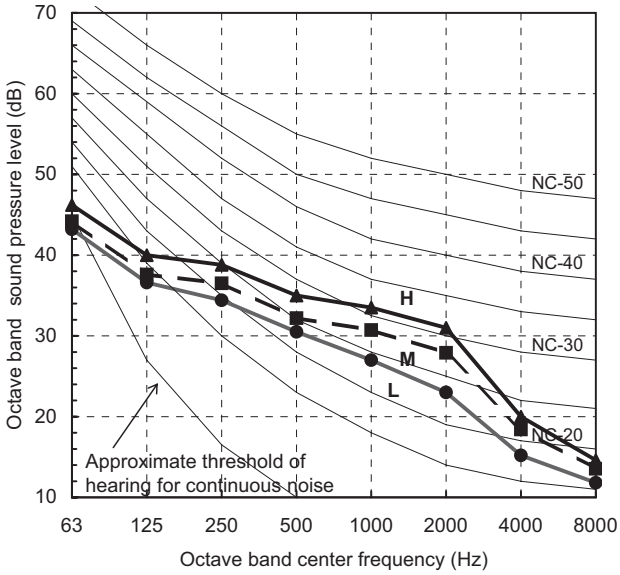


[External static pressure 50Pa]

| Fan tap | H | M | L |
|---|---|---|---|
| Sound pressure level (dB(A)) | 39 | 36 | 34 |

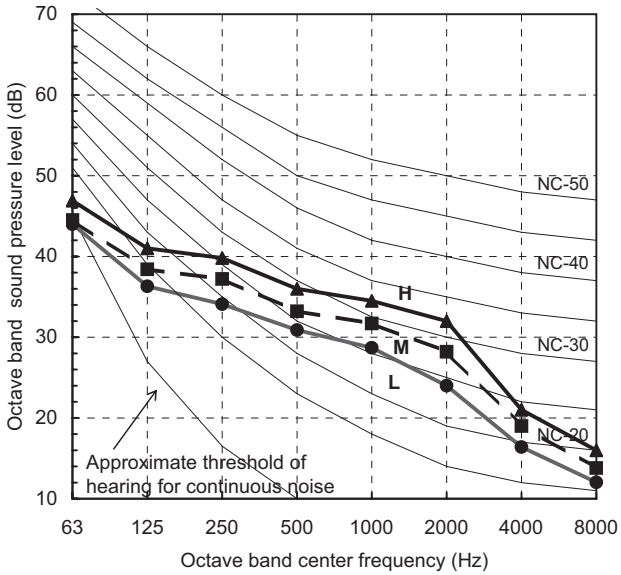

MMD-AP0074SPH2UL, MMD-AP0094SPH2UL

[Measuring location] Under air intake

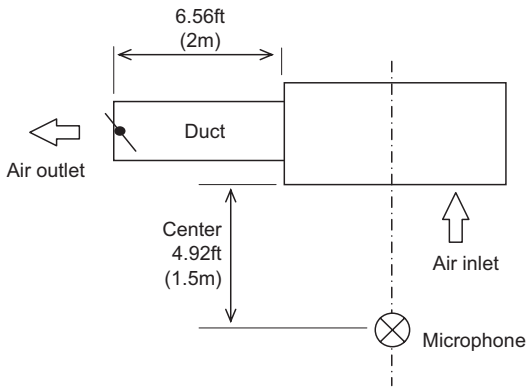


[External static pressure 20Pa]

| Fan tap | H | M | L |
|---|---|---|---|
| Sound pressure level (dB(A)) | 39 | 36 | 33 |

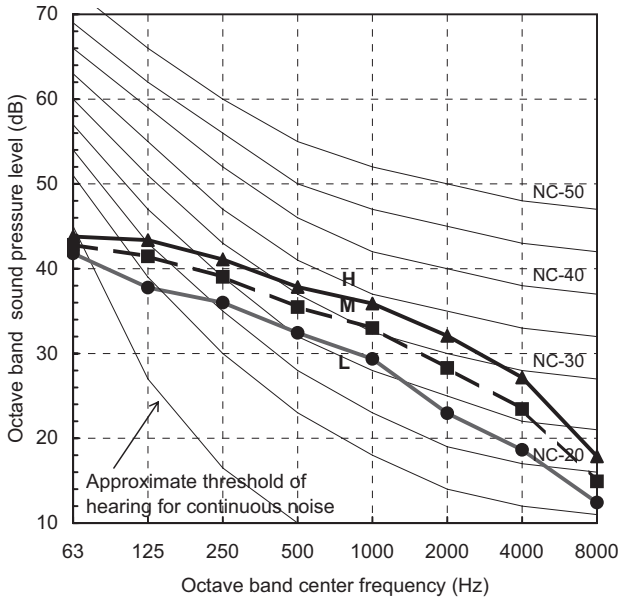


[External static pressure 35Pa]

| Fan tap | H | M | L |
|---|---|---|---|
| Sound pressure level (dB(A)) | 41 | 38 | 35 |

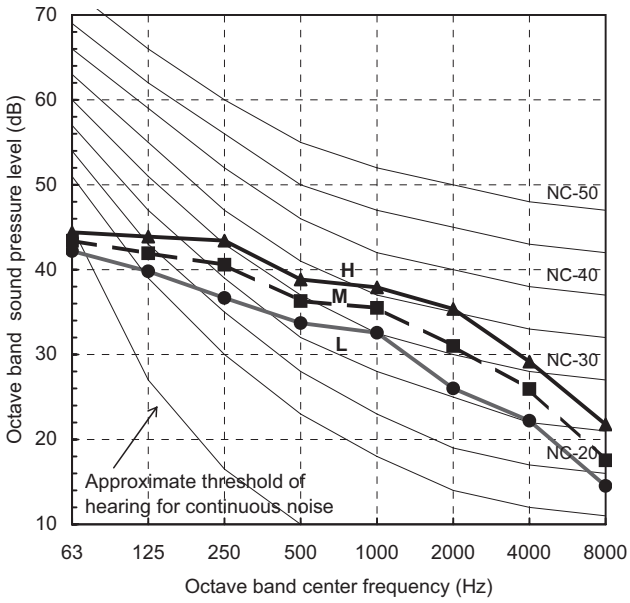


[External static pressure 50Pa]

| Fan tap | H | M | L |
|---|---|---|---|
| Sound pressure level (dB(A)) | 43 | 41 | 37 |

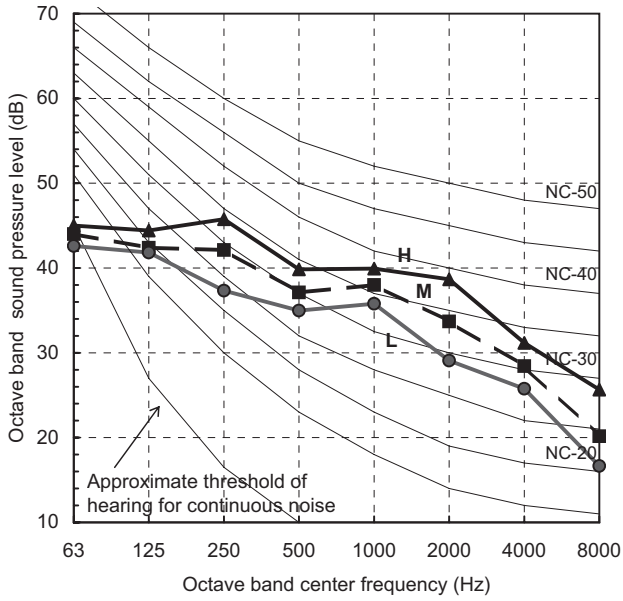

MMD-AP0124SPH2UL

[Measuring location] Under air intake

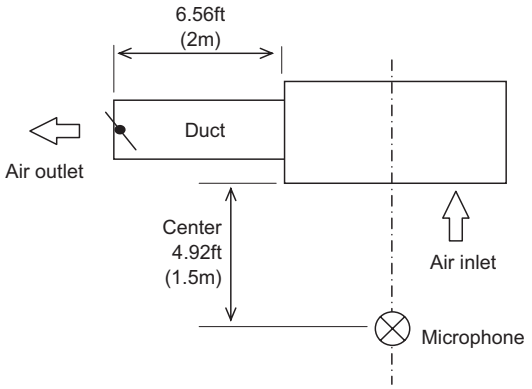


[External static pressure 20Pa]

| Fan tap | H | M | L |
|---|---|---|---|
| Sound pressure level (dB(A)) | 41 | 38 | 35 |

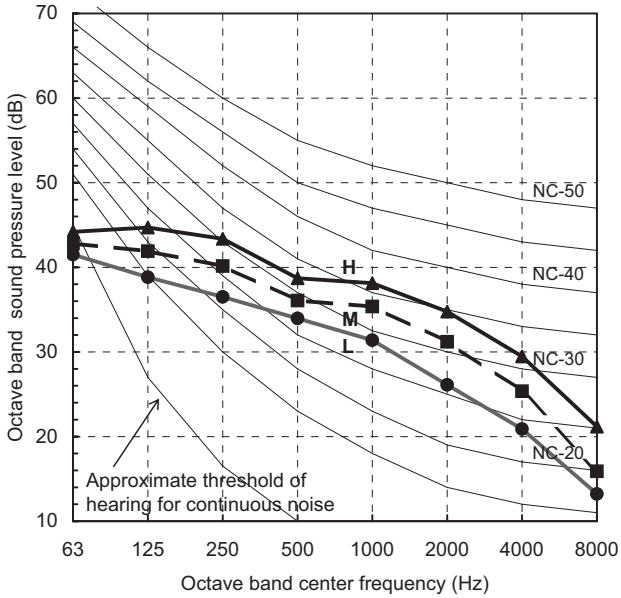


[External static pressure 35Pa]

| Fan tap | H | M | L |
|---|---|---|---|
| Sound pressure level (dB(A)) | 43 | 40 | 37 |

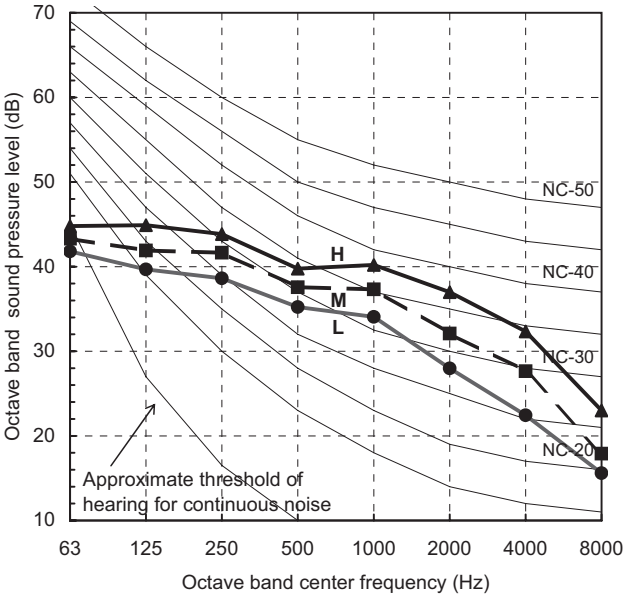


[External static pressure 50Pa]

| Fan tap | H | M | L |
|---|---|---|---|
| Sound pressure level (dB(A)) | 45 | 42 | 39 |

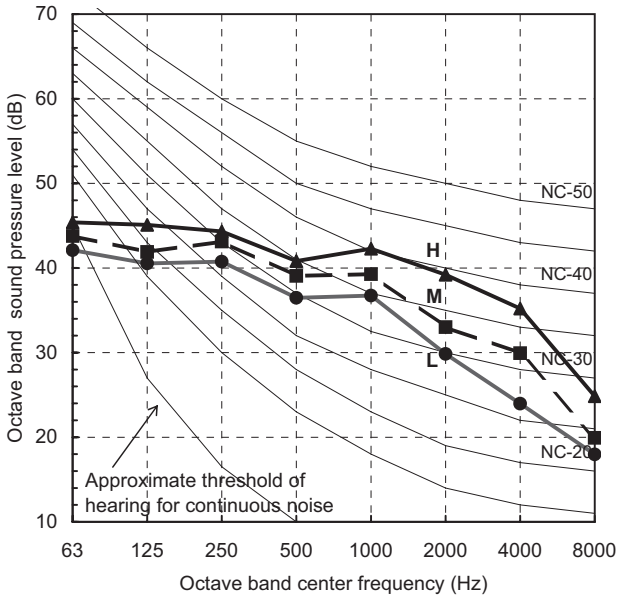

MMD-AP0154SPH2UL

[Measuring location] Under air intake

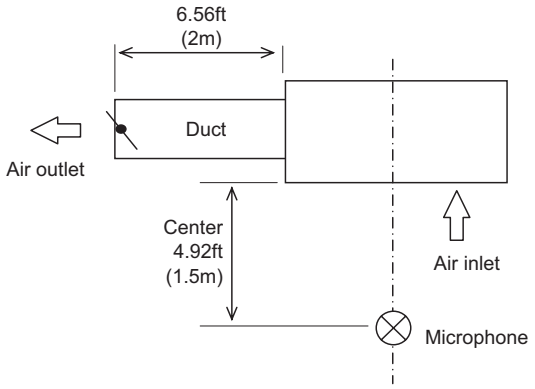


[External static pressure 20Pa]

| Fan tap | | | |
|---|---|---|---|
| Sound pressure level (dB(A)) | 41 | 38.5 | 35 |

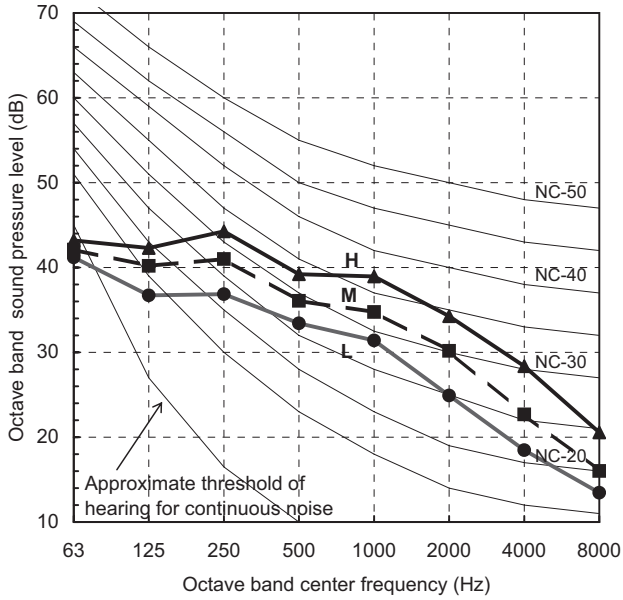


[External static pressure 35Pa]

| Fan tap | H | M | L |
|---|---|---|---|
| Sound pressure level (dB(A)) | 43 | 40.5 | 37 |

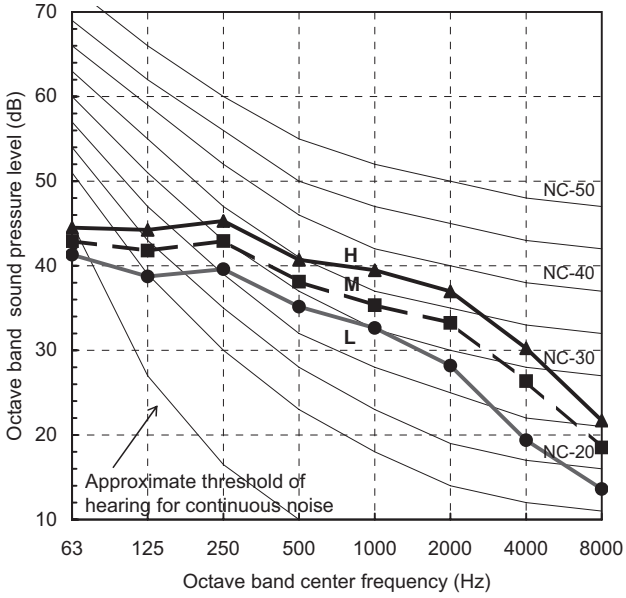


[External static pressure 50Pa]

| Fan tap | H | M | L |
|---|---|---|---|
| Sound pressure level (dB(A)) | 45 | 42.5 | 39 |

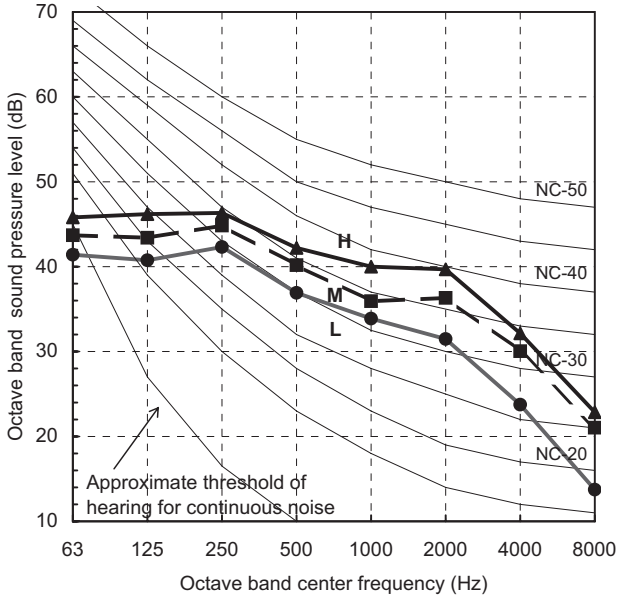

MMD-AP0184SPH2UL

[Measuring location] Under air intake

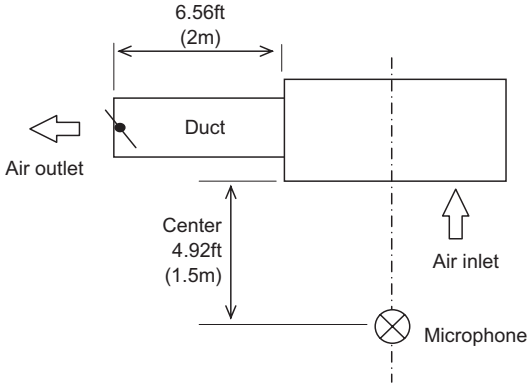


[External static pressure 20Pa]

| Fan tap | H | M | L |
|---|---|---|---|
| Sound pressure level (dB(A)) | 44.5 | 41 | 37.5 |

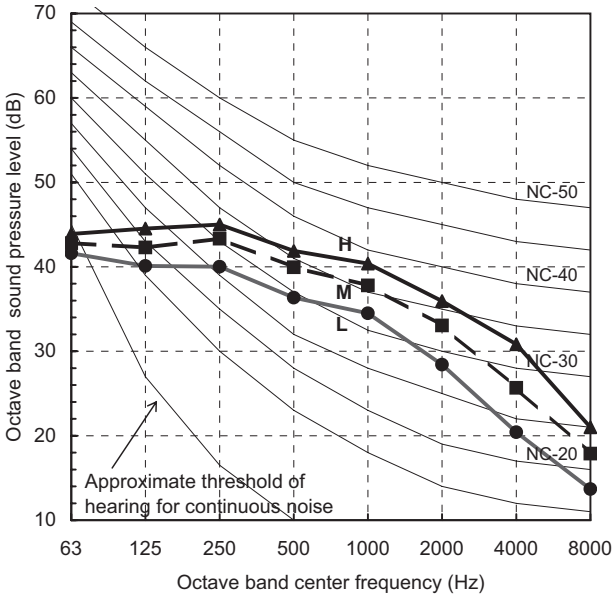


[External static pressure 35Pa]

| Fan tap | H | M | L |
|---|---|---|---|
| Sound pressure level (dB(A)) | 45.5 | 43 | 39 |

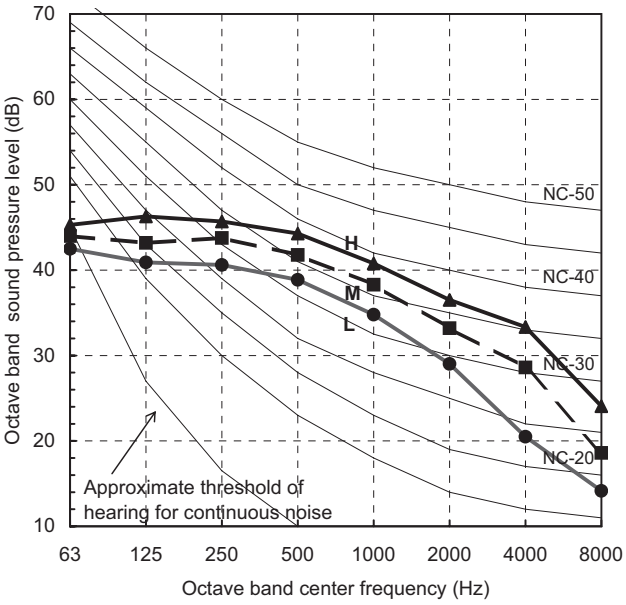


[External static pressure 50Pa]

| Fan tap | H | M | L |
|---|---|---|---|
| Sound pressure level (dB(A)) | 47 | 45 | 41 |

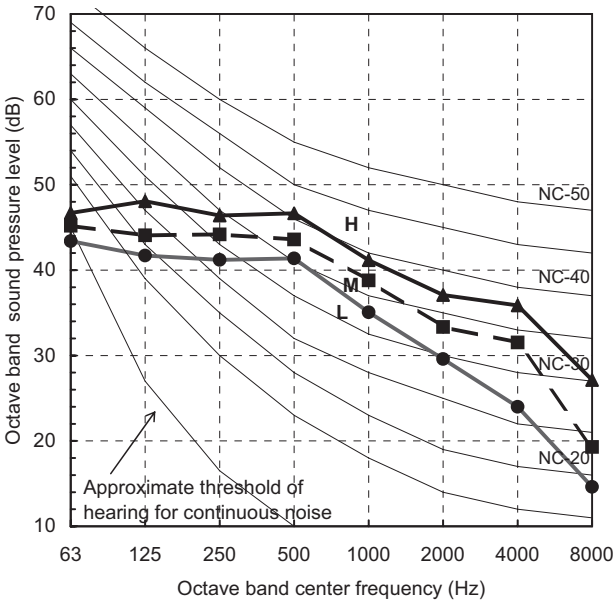

## 9. Fresh air intake (Design guide)

MMD-AP0074SPH2UL, AP0094SPH2UL, AP0124SPH2UL

### Caution

The fresh air shall be conditioned by heat reclaim ventilator or similar.
Ensure the fresh air flow rate is determined so that mixed suction air and fresh air maintain the operating temperature .

*1 Recommended conditioned air temperature is 53.6 °F to 86 °F.
However, make a fresh air flow rate within 20% of standard.

| Model name | Standard air flow (cfm) |
|---|---|
| MMD-AP0074SPH2UL | 318 |
| MMD-AP0094SPH2UL | 318 |
| MMD-AP0124SPH2UL | 353 |

Install a air filter within the fresh air duct. (Fresh air does not pass through the filter of Indoor unit.)
Insulate the fresh air duct.
Electrically connect the fan of the Heat exchanger unit and the Indoor unit to a single isolator.

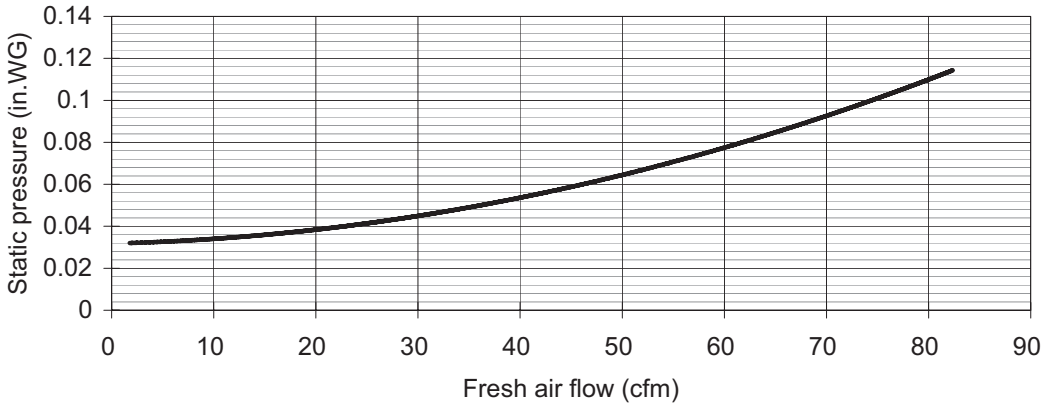


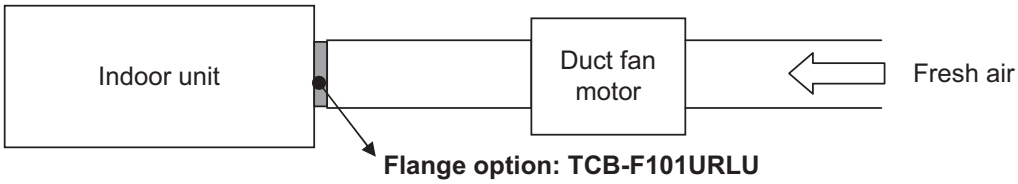


### Inter - lock circuit

Connect the driving relay of the duct fan (DC 12V) between 1 and 6 on the indoor P.C. board.
(Rated current of the relay for duct fan should be up to 75mA.)
After installation, carry out a trial operation to check that the duct fan of the indoor unit start/stop simultaneously.
(Carry out the trial operation following the installation manual of the indoor unit.)

MMD-AP0154SPH2UL, AP0184SPH2UL

**Caution**

The fresh air shall be conditioned by heat reclaim ventilator or similar.
Ensure the fresh air flow rate is determined so that mixed suction air and fresh air maintain the operating temperature .

*1 Recommended conditioned air temperature is 53.6 °F to 86 °F.
However, make a fresh air flow rate within 20% of standard.

| Model name | Standard air flow (cfm) |
|---|---|
| MMD-AP0154SPH2UL | 406 |
| MMD-AP0184SPH2UL | 459 |

Install a air filter within the fresh air duct. (Fresh air does not pass through the filter of Indoor unit.)
Insulate the fresh air duct.
Electrically connect the fan of the Heat exchanger unit and the Indoor unit to a single isolator.

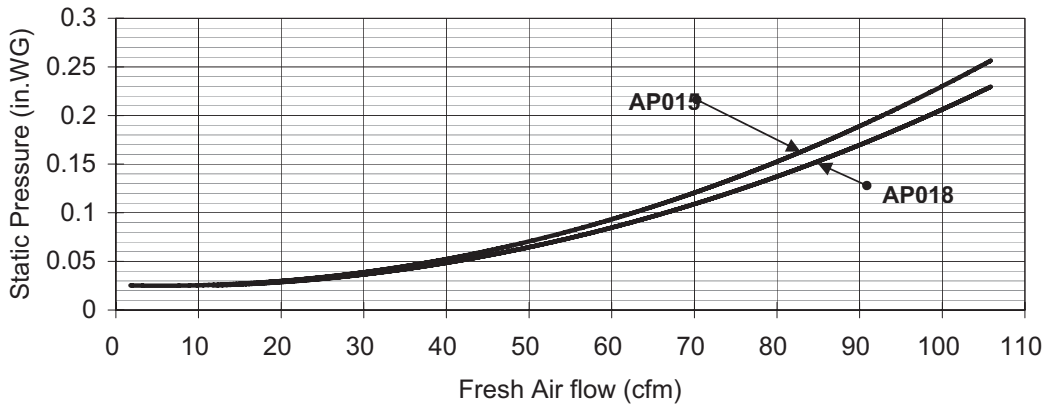


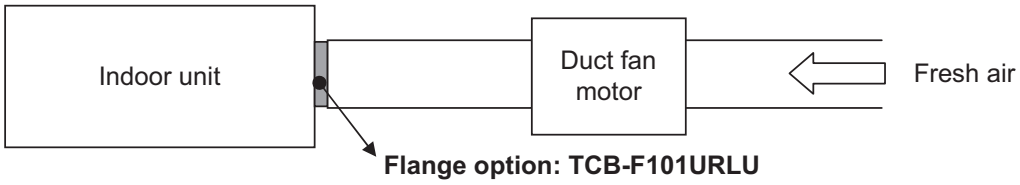


**Inter - lock circuit**

Connect the driving relay of the duct fan (DC 12V) between 1 and 6 on the indoor P.C. board.
(Rated current of the relay for duct fan should be up to 75mA.)
After installation, carry out a trial operation to check that the duct fan of the indoor unit start/stop simultaneously.
(Carry out the trial operation following the installation manual of the indoor unit.)

## 10. Accessory

**Optional part for Slim Ducted type**

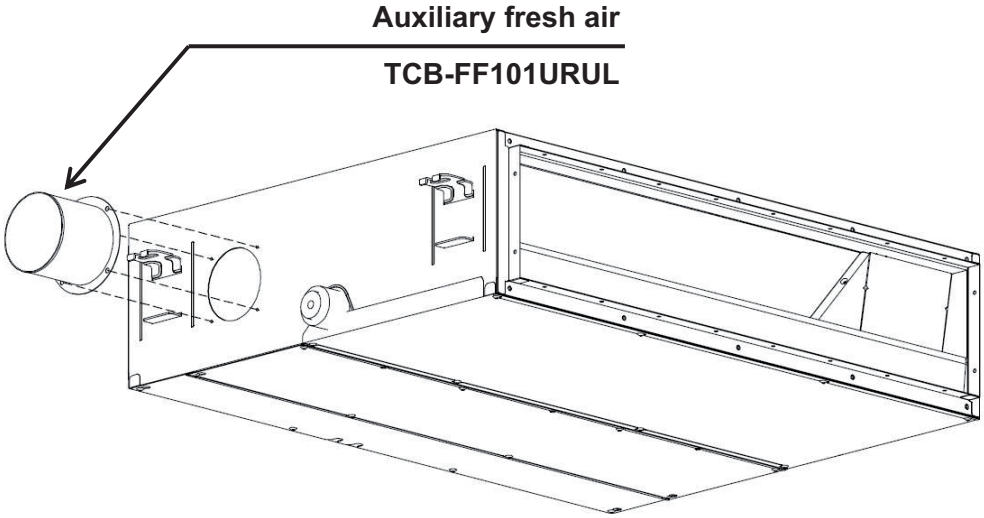


| Parts Name | Model Name | Applied Model | Note |
|---|---|---|---|
| Auxiliary fresh air flange | TCB-FF101URUL | MMD-0074 to 0184SPH2UL | For fresh air intake by using the knockout hole (dia.=3.94") |

# 7-1. Warnings on refrigerant leakage

## Check of Concentration Limit

**The room in which the air conditioner is to be installed requires a design that in the event of refrigerant gas leaking out, its concentration will not exceed a set limit.**

The refrigerant R410A which is used in the air conditioner is safe, without the toxicity or combustibility of ammonia, and is not restricted by laws to be imposed which protect the ozone layer. However, since it contains more than air, it poses the risk of suffocation if its concentration should rise excessively. Suffocation from leakage of R410A is almost non-existent. With the recent increase in the number of high concentration buildings, however, the installation of multi air conditioner systems is on the increase because of the need for effective use of floor space, individual control, energy conservation by curtailing heat and carrying power etc. Most importantly, the multi air conditioner system is able to replenish a large amount of refrigerant compared with conventional individual air conditioners. If a single unit of the multi conditioner system is to be installed in a small room, select a suitable model and installation procedure so that if the refrigerant accidentally leaks out, its concentration does not reach the limit (and in the event of an emergency, measures can be made before injury can occur). In a room where the concentration may exceed the limit, create an opening with adjacent rooms, or install mechanical ventilation combined with a gas leak detection device. The concentration is as given below.

$$\frac{\text{Total amount of refrigerant (lbs (kg))}}{\text{Min. volume of the indoor unit installed room (ft}^3\text{ (m}^3\text{))}} \leq \text{Concentration limit (lbs/ft}^3\text{ (kg/m}^3\text{))}$$

**Concentration limit**

Compliance to the local applicable regulations and standards for the concentration limit is required.

**NOTE 1 :**

If there are 2 or more refrigerating systems in a single refrigerating device, the amounts of refrigerant should be as charged in each independent device.

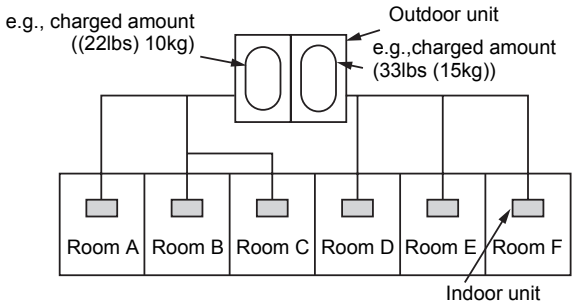


For the amount of charge in this example:

The possible amount of leaked refrigerant gas in rooms A, B and C is 22lbs (10kg).

The possible amount of leaked refrigerant gas in rooms D, E and F is 33lbs (15kg).

**Important**

**NOTE 2 :**

The standards for minimum room volume are as follows.

(1) No partition (shaded portion)

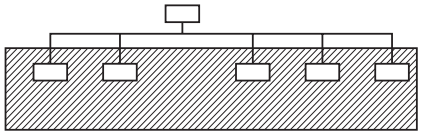

(2) When there is an effective opening with the adjacent room for ventilation of leaking refrigerant gas (opening without a door, or an opening 0.15% or larger than the respective floor spaces at the top or bottom of the door).

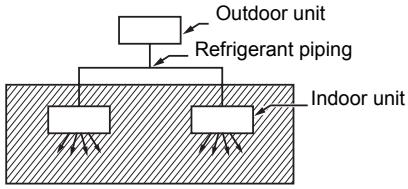


(3) If an indoor unit is installed in each partitioned room and the refrigerant piping is interconnected, the smallest room of course becomes the object. But when a mechanical ventilation is installed interlocked with a gas leakage detector in the smallest room where the density limit is exceeded, the volume of the next smallest room becomes the object.

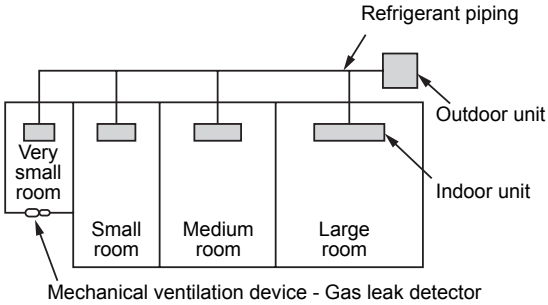

# 7-2. Free branching system

[1] Line branching system
[2] Header branching system
[3] Header branching system after line branching
[4] Line branching system after header branching
[5] Header branching system after header branching
The above five branching systems enable to dramatically increase the flexibility of refrigerant piping design.

| | |
|---|---|
| Line branching system | 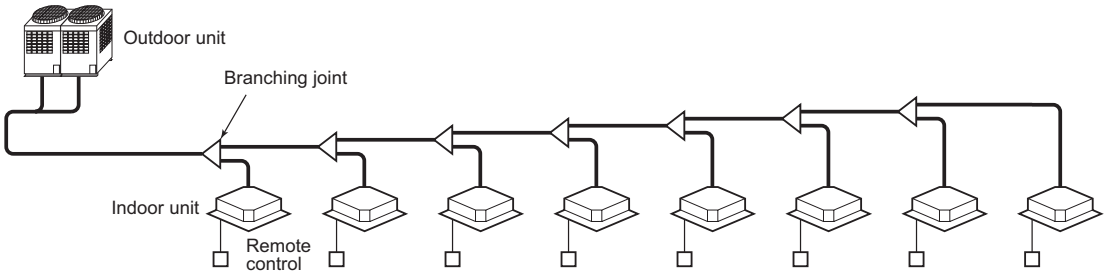 |
| Header branching system | 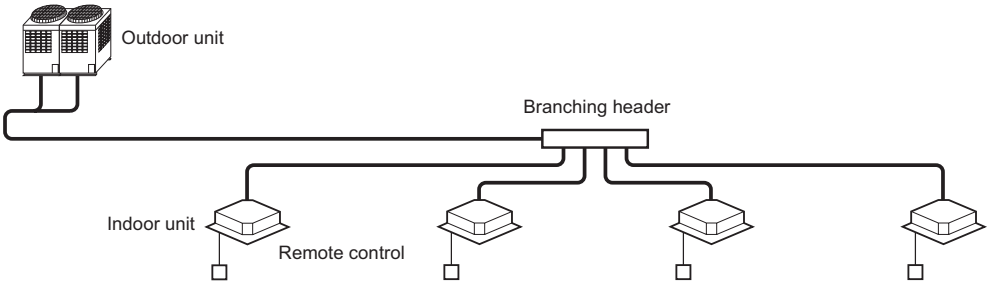 |
| Header branching system after line branching | 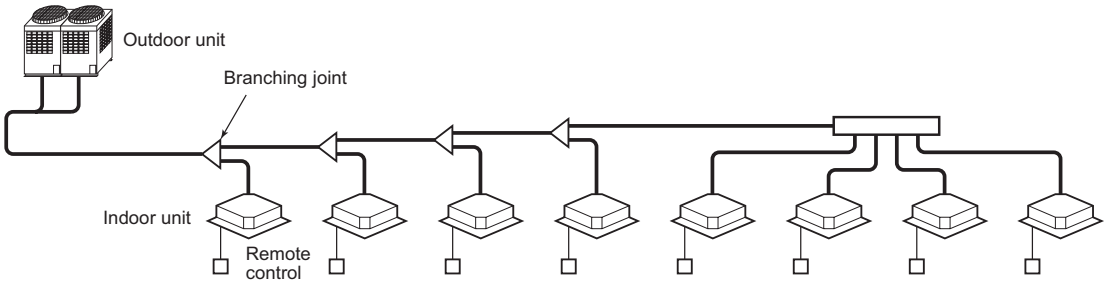 |
| Line branching system after header branching<br>Header branching system after header branching | 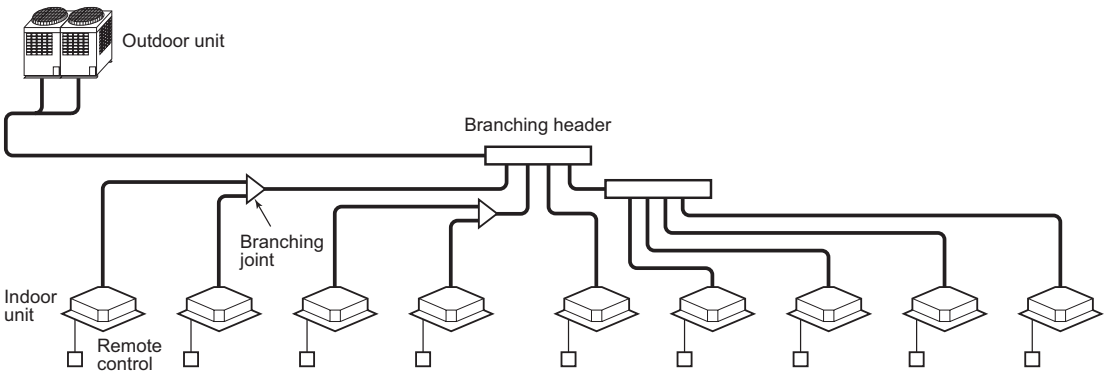 |

# 7-3. Allowable length/height difference of refrigerant piping

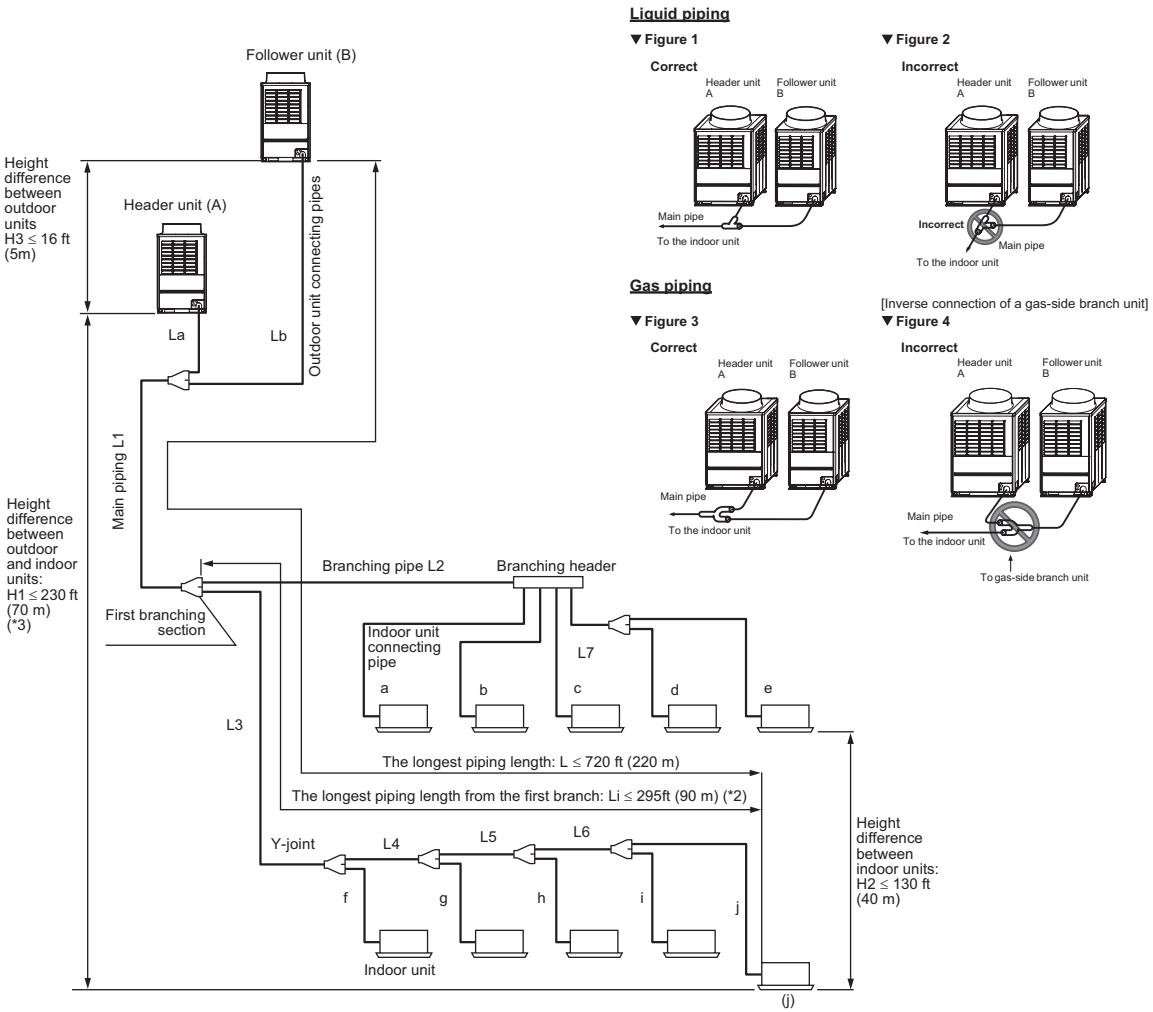


**Note 1)** The header unit is connected to main piping to indoor units.
**Note 2)** The header unit is the one with the highest capacity code. A (header unit) ≥ B
**Note 3)** To connect gas pipes to indoor units, use Y-shaped branching joints to keep pipes level.

## Allowable length and height difference of refrigerant piping

| Item | | | Allowable value (ft (m)) | Pipes |
|---|---|---|---|---|
| Pipe length | Total extension of pipe (liquid pipe) | Actual length | 985 (300) | La + Lb + L1 + L2 + L3 + L4 + L5 + L6 + L7 + a + b + c + d + e + f + g + h + i + j |
| | Farthest piping length L (*1) | Equivalent length | 720 (220) | Lb + L1 + L3 + L4 + L5 + L6 + j |
| | | Actual length | 590 (180) | |
| | Main piping length | Equivalent length | 395 (120) | L1 |
| | | Actual length | 330 (100) | |
| | Farthest equivalent piping length from the first branch Li (*1) | | 295 (90) (*2) | L3 + L4 + L5 + L6 + j |
| | Maximum equivalent piping length of pipes connected to outdoor units | | 33 (10) | La, Lb |
| | Maximum actual length of pipes connected to indoor units | | 98 (30) | a, b, c, d, e, f, g, h, i, j |
| | Maximum equivalent length between branching sections | | 165 (50) | L2, L3, L4, L5, L6, L7 |
| Height difference | Height between outdoor and indoor units H1 | Upper outdoor units | 230 (70) (*3) | – |
| | | Lower outdoor units | 130 (40) (*4) | – |
| | Height between indoor units H2 | | 130 (40) | – |
| | Height between outdoor units H3 | | 16 (5) | – |

*1: Farthest outdoor unit from the first branch: (B), farthest indoor unit: (j)
*2: Make the difference 215 ft (65 m) or less if the height difference between outdoor and indoor units (H1) is more than 10 ft (3 m).
*3: Make the difference 165 ft (50 m) or less if the height difference between indoor units (H2) is more than 10 ft (3 m).
*4: Make the difference 98 ft (30 m) or less if the height difference between indoor units (H2) is more than 10 ft (3 m).

# 7-4. Selection of refrigerant piping

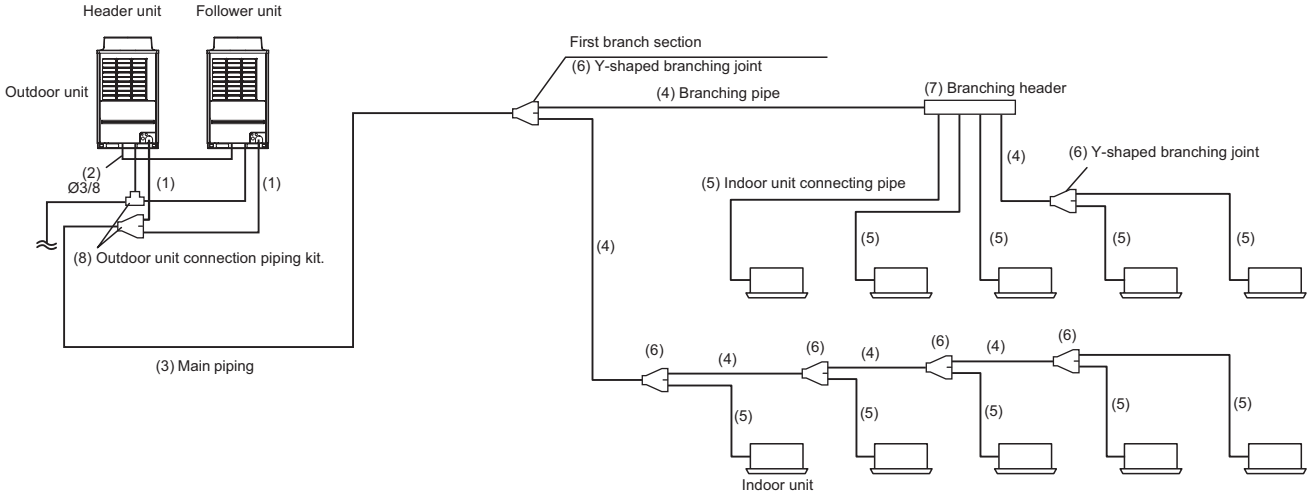


(1) Outdoor unit connecting pipe

| Outdoor unit capacity type | Gas side | Liquid side |
|---|---|---|
| 072 type | Ø7/8" | Ø1/2" |
| 096 type | Ø7/8" | Ø1/2" |
| 114 type | Ø1-1/8" | Ø1/2" |

(2) Balance pipe

| Outdoor unit capacity type | Balance pipe |
|---|---|
| 144 - 228 type | Ø3/8" |

(3) Main piping

| Outdoor unit capacity type | Gas side | Liquid side |
|---|---|---|
| 072 - 096 type | Ø7/8" | Ø1/2" |
| 114 type | Ø1-1/8" | Ø1/2" |
| 144 - 168 - 192type | Ø1-1/8" | Ø5/8" |
| 228 type | Ø1-3/8" | Ø3/4" |

(4) Branching pipe

| Total capacity codes of indoor units at downstream side | Gas side | Liquid side |
|---|---|---|
| Below 23 | Ø1/2" | Ø3/8" |
| 23 to below 61 | Ø5/8" | Ø3/8" |
| 61 to below 116 | Ø7/8" | Ø1/2" |
| 116 to below 193 | Ø1-1/8" | Ø5/8" |
| 193 or more | Ø1-3/8" | Ø3/4" |

(Note)
Pipe size differs based on the total capacity code value of indoor units at the downstream side. If the total value exceeds the capacity code of the outdoor unit, apply the capacity code of the outdoor unit.

(5) Indoor unit connection pipe

| Indoor unit capacity type | | | Gas side | Liquid side |
|---|---|---|---|---|
| 007 to 012 type | Pipe length (actual length) | Below 49.3ft | Ø3/8" | Ø1/4" |
| | | 49.3ft or more | Ø1/2" | Ø1/4" |
| 015 to 018 type | | | Ø1/2" | Ø1/4" |
| 021 to 054 type | | | Ø5/8" | Ø3/8" |
| 072 to 096 type | | | Ø7/8" | Ø1/2" |

(6) Y-shaped branching joint

| Total capacity codes of indoor units | Model |
|---|---|
| Below 61 | RBM-BY55UL |
| 61 to below 136 | RBM-BY105UL |
| 136 or more | RBM-BY205UL |

(Note)
When using a Y-shaped branching joint for the 1st branch, select according to capacity code of the outdoor unit.

(7) Branching header

| Total capacity codes of indoor units | | Model |
|---|---|---|
| For 4 branches | Below 136 | RBM-HY1043UL |
| | 136 to below 241 | RBM-HY2043UL |
| For 8 branches | Below 136 | RBM-HY1083UL |
| | 136 to below 241 | RBM-HY2083UL |

(Note)
Up to a total of 54 maximum capacity code is connectable to one line after branching of header.
When using a branching header for the 1st branch and the total capacity codes of all outdoor units are 114 or more, use a RBM-HY2043UL or RBM-HY2083UL regardless of the total capacity codes of indoor units at downstream side.

(8) Outdoor unit connection piping kit

| Outdoor unit capacity type | Model |
|---|---|
| Outdoor unit connection piping kit | RBM-BT14UL |

# 7-5. Charging requirement with additional refrigerant

**After the system has been vacuumed, replace the vacuum pump with a refrigerant cylinder and system with additional refrigerant.**

## Calculating the amount of additional refrigerant required

HFC R410A

### Refrigerant in the system when shipped from the factory

| | |
|---|---|
| Model MMY-MAP | 0724HT9UL, 0724HT6UL, 0964HT9UL, 0964HT9UL, 1144HT9UL, 1144HT6UL |
| Refrigerant amount charged in factory | 25.4 lb |

When the system is charged with refrigerant at the factory, the amount of refrigerant needed for the pipes at the site is not included. Therefore, calculate the additional amount needed and add the required amount to the system.

**(Calculation)**

Additional refrigerant charge amount is calculated based on the size of liquid pipe at site and its real length.

| | | | | | | | |
|---|---|---|---|---|---|---|---|
| Additional refrigerant charge amount | (lb) = | Actual length of liquid pipe | × | Additional refrigerant charge amount per liquid pipe 1ft [Table 1] | + | Adjustment amount of refrigerant [Table 2] |

**Table 1**

| Liquid pipe outer diameter (in) | Ø1/4" | Ø3/8" | Ø1/2" | Ø5/8" | Ø3/4" |
|---|---|---|---|---|---|
| Additional refrigerant amount/1ft (lb) | 0.017 | 0.037 | 0.071 | 0.108 | 0.168 |

**Table 2**

| Outdoor unit capacity type | Adjustment amount of refrigerant (lb) | Combined outdoor units | |
|---|---|---|---|
| 072 type | 3.31 | 072 type | – |
| 096 type | 13.23 | 096 type | – |
| 114 type | 15.43 | 114 type | – |
| 144 type | 0.00 | 072 type | 072 type |
| 168 type | 16.53 | 096 type | 072 type |
| 192 type | 27.56 | 096 type | 096 type |
| 228 type | 27.56 | 114 type | 114 type |

**Example:**
**(114 type)**

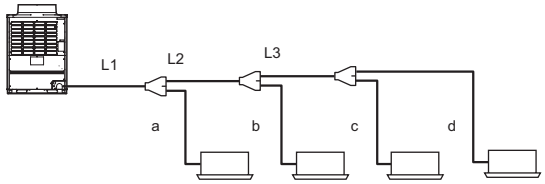


| | | | | | | | |
|---|---|---|---|---|---|---|---|
| L1 | Ø1/2" : 30ft | L2 | Ø1/2" : 15ft | L3 | Ø3/8" : 10ft | | |
| a | Ø1/4" : 10ft | b | Ø3/8" : 15ft | c | Ø1/4" : 10ft | d | Ø1/4" : 10ft |

Additional charge amount (lb) = (Lx × 0.017lb/ft) + (Ly × 0.037lb/ft) + (Lz × 0.071lb/ft) + (15.43lb)
= ((a + c + d) × 0.017lb) + ((L3 + b) × 0.037lb) + ((L1 + L2) × 0.017lb + (15.43lb)
= (30 × 0.017lb) + (25 × 0.037lb) + (45 × 0.071lb) + (15.43lb)
= 20.06lb

Lx : Actual total length of liquid pipe Ø1/4" (ft)
Ly : Actual total length of liquid pipe Ø3/8" (ft)
Lz : Actual total length of liquid pipe Ø1/2" (ft)

# 7-6. Branch header / branch joint

- **Branch header**

**RBM-HY1043UL, HY1083UL, HY2043UL, HY2083UL**

**Gas side**

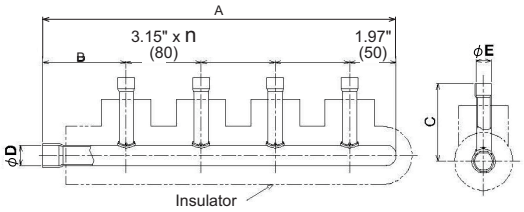


**Liquid side**

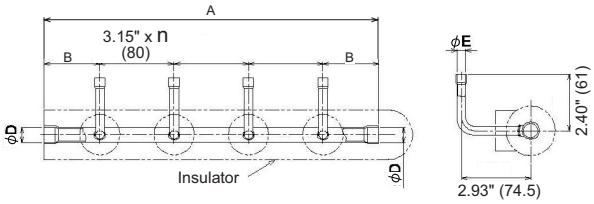


Unit:in(mm)

| Model | | A | B | C | ϕD | ϕE | n | Accessory socket Q'ty |
|---|---|---|---|---|---|---|---|---|
| RBM-HY1043UL | Gas side | 15.0" (380) | 3.54" (90) | 3.29" (83.6) | 7/8" (22.2) | 5/8" (15.9) | 3 | ⑥ x 4, ⑨ x 4, ⑭ x 1, ⑱ x 1, ⑦⓪ x 1 |
| | Liquid side | 13.0" (330) | 1.77" (45) | – | 5/8" (15.9) | 3/8" (9.5) | 3 | ① x 4, ⑥ x 1, ⑨ x 1 |
| RBM-HY1083UL | Gas side | 27.6" (700) | 3.54" (90) | 3.29" (83.6) | 7/8" (22.2) | 5/8" (15.9) | 7 | ⑥ x 8, ⑨ x 8, ⑭ x 1, ⑱ x 1, ⑦⓪ x 1 |
| | Liquid side | 25.6" (650) | 1.77" (45) | – | 5/8" (15.9) | 3/8" (9.5) | 7 | ① x 8, ⑥ x 1, ⑨ x 1 |
| RBM-HY2043UL | Gas side | 15.2" (385.5) | 3.76" (95.5) | 3.52" (89.3) | 1 1/4" (31.8) | 5/8" (15.9) | 3 | ⑥ x 2, ⑨ x 2, ㉗ x 1, ⑤⑨ x 1 |
| | Liquid side | 13.0" (330) | 1.77" (45) | – | 5/8" (15.9) | 3/8" (9.5) | 3 | ① x 2 |
| RBM-HY2083UL | Gas side | 27.8" (705.5) | 3.76" (95.5) | 3.52" (89.3) | 1 1/4" (31.8) | 5/8" (15.9) | 7 | ⑥ x 7, ⑨ x 7, ㉗ x 1, ⑤⑨ x 1 |
| | Liquid side | 25.6" (680) | 1.77" (45) | – | 5/8" (15.9) | 3/8" (9.5) | 7 | ① x 7 |

- **Y-shape branch joint**

**RBM-BY55UL, BY105UL, BY205UL**

**Gas side**

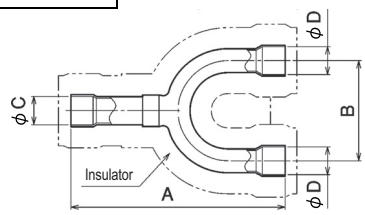


**Liquid side**

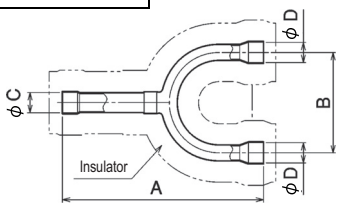


Unit:in(mm)

| RBM- | | A | B | ϕC | ϕD | Accessory socket Q'ty |
|---|---|---|---|---|---|---|
| BY55UL | Gas side | 6.30" (160) | 3.15" (80) | 5/8" (15.9) | 5/8" (15.9) | ⑨ x 1, ⑤① x 2, ⑨① x 1 |
| | Liquid side | 5.12" (130) | 2.76" (70) | 3/8" (9.5) | 3/8" (9.5) | ① x 2 |
| BY105UL | Gas side | 6.69" (170) | 3.15" (80) | 7/8" (22.2) | 7/8" (22.2) | ⑭ x 21, ⑦⓪ x 2, ⑨① x 1 |
| | Liquid side | 6.30" (160) | 3.15" (80) | 5/8" (15.9) | 5/8" (15.9) | ⑨ x 1, ⑨① x 1, ⑨② x 1 |
| BY205UL | Gas side | 7.87" (200) | 3.15" (80) | 1 1/4" (31.8) | 1 1/8" (28.6) | ⑯ x 1, ㉗ x 1, ㊸ x 2, ⑤⑧ x 1, ⑤⑨ x 1, ⑨① x 1 |
| | Liquid side | 6.30" (160) | 3.15" (80) | 5/8" (15.9) | 5/8" (15.9) | ⑨ x 1, ⑤① x 2, ⑨② x 1 |

- **Branching joint for connection of outdoor units(Set of two joints)**

**RBM-BT14UL**

## Gas side

Unit:in(mm)

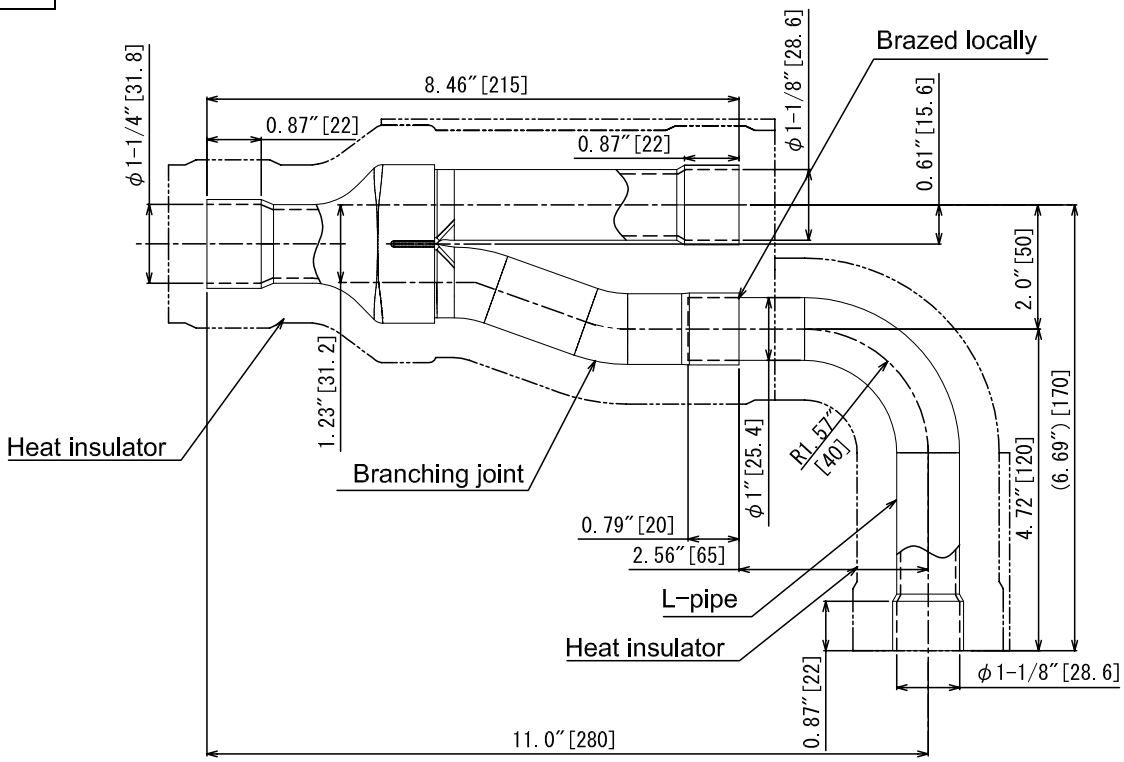


## Liquid side

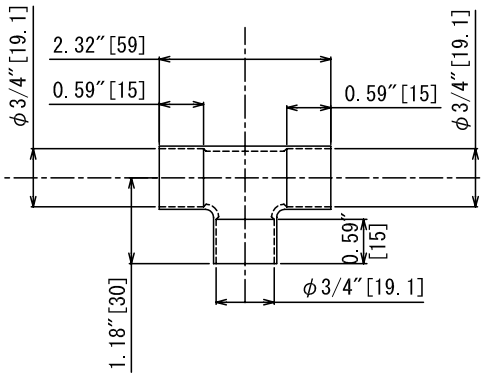


| RBM-BT14UL | |
|---|---|
| | Accessory socket Q'ty |
| Gas side | ㉗ x 1, ㊸ x 2, ㊾ x 1, |
| Liquid side | ⑩ x 2, ⑬ x 1 |

- **Accessory socket**

Unit:in(mm)

①

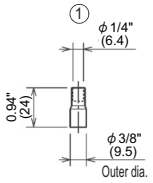


⑥⑨⑤①

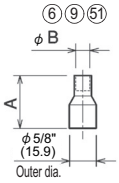


| | A | ϕB |
|---|---|---|
| ⑥ | 1.26" (32) | 3/8" (9.5) |
| ⑨ | 1.10" (28) | 1/2" (12.7) |
| ⑤① | 1.48" (37.5) | 3/4" (19.1) |

⑩⑬

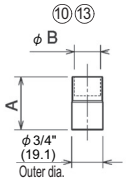


| | A | ϕB |
|---|---|---|
| ⑩ | 1.42" (36) | 1/2" (12.7) |
| ⑬ | 1.30" (33) | 5/8" (15.9) |

⑭⑱⑦⓪

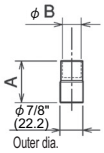


| | A | ϕB |
|---|---|---|
| ⑭ | 1.57" (40) | 5/8" (15.9) |
| ⑱ | 1.57" (40) | 3/4" (19.1) |
| ⑦⓪ | 2.13" (54) | 1 1/8" (28.6) |

⑯④③⑤⑧

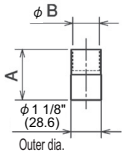


| | A | ϕB |
|---|---|---|
| ⑯ | 1.97" (50) | 5/8" (15.9) |
| ④③ | 1.97" (50) | 7/8" (22.2) |
| ⑤⑧ | 2.44" (62) | 1 3/8" (34.9) |

②⑦⑤⑨

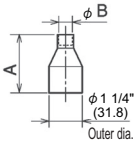


| | A | ϕB |
|---|---|---|
| ② | 1.93" (49) | 1 1/8" (28.6) |
| ⑤⑨ | 2.32" (59) | 1 3/8" (34.9) |

⑨①

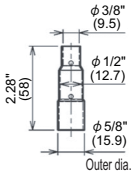


⑨②

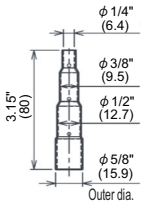


## Sealed pipe

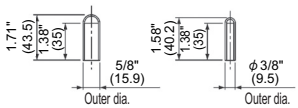

# 8-1. General

- The equipment shall be installed in compliance with NEC and local codes.
- Do not connect high voltage power wires to the control terminal blocks (U1, U2, U3, U4, U5, U6).
- All field wiring insulation rating must comply with NEC and local codes.
- All wiring must be strained relieved as specified by NEC and local codes.
- Do not energize the indoor units until leak check and vacuuming are completed.
- Use copper supply wire.
- Use UL wires rated 600V for the system interconnection wires.
- Use UL wires rated 300V for remote control wires.

# 8-2. Outdoor unit power supply

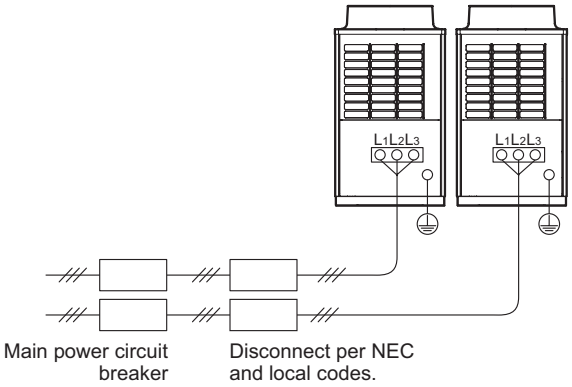


Every outdoor unit must have a dedicated power supply.

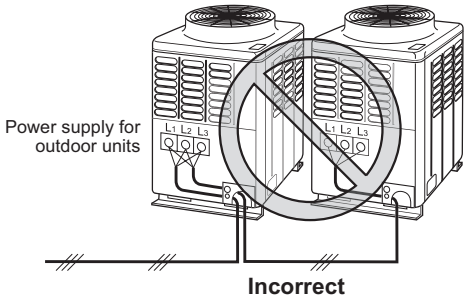


## Outdoor unit data

### 208/230V model

| Unit type | Capacity type | Model name MMY- | Power supply | | Voltage Range | | Compressor | | Fan Motor | MCA | MOCP |
|---|---|---|---|---|---|---|---|---|---|---|---|
| | | | Phase and frequency | Nominal Voltage | Min. | Max. | Unit No.1 | Unit No.2 | | | |
| | | | | | (V) | (V) | (kW) | (kW) | (kW) | (A) | (A) |
| Single unit | 072 | MAP0724HT9UL | 3 ~ 60Hz | 208/230V | 187 | 253 | 2.3 x 2 | | 1.0 | 36 | 40 |
| | 096 | MAP0964HT9UL | 3 ~ 60Hz | 208/230V | 187 | 253 | 2.1 x 3 | | 1.0 | 50 | 60 |
| | 114 | MAP1144HT9UL | 3 ~ 60Hz | 208/230V | 187 | 253 | 2.5 x 3 | | 1.0 | 52 | 60 |
| Combined model | 144 | AP1444HT9UL | 3 ~ 60Hz | 208/230V | 187 | 253 | 2.3 x 2 | 2.3 x 2 | 1.0 x 2 | 36 + 36 | 40 + 40 |
| | 168 | AP1684HT9UL | 3 ~ 60Hz | 208/230V | 187 | 253 | 2.1 x 3 | 2.3 x 2 | 1.0 x 2 | 50 + 36 | 60 + 40 |
| | 192 | AP1924HT9UL | 3 ~ 60Hz | 208/230V | 187 | 253 | 2.1 x 3 | 2.1 x 3 | 1.0 x 2 | 50 + 50 | 60 + 60 |
| | 228 | AP2284HT9UL | 3 ~ 60Hz | 208/230V | 187 | 253 | 2.5 x 3 | 2.5 x 3 | 1.0 x 2 | 52 + 52 | 60 + 60 |

### 460V model

| Unit type | Capacity type | Model name MMY- | Power supply | | Voltage Range | | Compressor | | Fan Motor | MCA | MOCP |
|---|---|---|---|---|---|---|---|---|---|---|---|
| | | | Phase and frequency | Nominal Voltage | Min. | Max. | Unit No.1 | Unit No.2 | | | |
| | | | | | (V) | (V) | (kW) | (kW) | (kW) | (A) | (A) |
| Single unit | 072 | MAP0724HT6UL | 3 ~ 60Hz | 460V | 414 | 506 | 2.3 x 2 | | 1.0 | 18 | 20 |
| | 096 | MAP0964HT6UL | 3 ~ 60Hz | 460V | 414 | 506 | 2.1 x 3 | | 1.0 | 23 | 25 |
| | 114 | MAP1144HT6UL | 3 ~ 60Hz | 460V | 414 | 506 | 2.5 x 3 | | 1.0 | 24 | 25 |
| Combined model | 144 | AP1444HT6UL | 3 ~ 60Hz | 460V | 414 | 506 | 2.3 x 2 | 2.3 x 2 | 1.0 x 2 | 18 + 18 | 20 + 20 |
| | 168 | AP1684HT6UL | 3 ~ 60Hz | 460V | 414 | 506 | 2.1 x 3 | 2.3 x 2 | 1.0 x 2 | 23 + 18 | 25 + 20 |
| | 192 | AP1924HT6UL | 3 ~ 60Hz | 460V | 414 | 506 | 2.1 x 3 | 2.1 x 3 | 1.0 x 2 | 23 + 23 | 25 + 25 |
| | 228 | AP2284HT6UL | 3 ~ 60Hz | 460V | 414 | 506 | 2.5 x 3 | 2.5 x 3 | 1.0 x 2 | 24 + 24 | 25 + 25 |

Notes MCA : Minimum Circuit Amps (minimum circuit Amps requires for power supply design.)
MOCP : Maximum Ocercurrent Protection (Amps)

# 8-3. Indoor unit power supply

## Electrical characteristics

| Type | Model | Norminal Voltage (V-Ph-Hz) | Voltage Range (V) | | FLA | MCA | MOCP |
|---|---|---|---|---|---|---|---|
| | | | Min | Max | A | A | A |
| 4-Way Cassette type | MMU-AP0182H2UL | 208/230-1-60 | 187 | 253 | 0.6 | 0.8 | 15 |
| | MMU-AP0212H2UL | 208/230-1-60 | 187 | 253 | 0.8 | 1.0 | 15 |
| | MMU-AP0242H2UL | 208/230-1-60 | 187 | 253 | 0.8 | 1.0 | 15 |
| | MMU-AP0302H2UL | 208/230-1-60 | 187 | 253 | 0.8 | 1.0 | 15 |
| | MMU-AP0362H2UL | 208/230-1-60 | 187 | 253 | 1.0 | 1.3 | 15 |
| | MMU-AP0422H2UL | 208/230-1-60 | 187 | 253 | 1.0 | 1.3 | 15 |
| Compact 4-Way Cassette type | MMU-AP0071MH2UL | 208/230-1-60 | 187 | 253 | 0.4 | 0.5 | 15 |
| | MMU-AP0091MH2UL | 208/230-1-60 | 187 | 253 | 0.4 | 0.5 | 15 |
| | MMU-AP0121MH2UL | 208/230-1-60 | 187 | 253 | 0.4 | 0.5 | 15 |
| | MMU-AP0151MH2UL | 208/230-1-60 | 187 | 253 | 0.5 | 0.7 | 15 |
| | MMU-AP0181MH2UL | 208/230-1-60 | 187 | 253 | 0.5 | 0.7 | 15 |
| Ceiling type | MMC-AP0181H2UL | 208/230-1-60 | 187 | 253 | 0.4 | 0.5 | 15 |
| | MMC-AP0241H2UL | 208/230-1-60 | 187 | 253 | 0.5 | 0.7 | 15 |
| | MMC-AP0361H2UL | 208/230-1-60 | 187 | 253 | 0.8 | 1.0 | 15 |
| | MMC-AP0421H2UL | 208/230-1-60 | 187 | 253 | 0.9 | 1.2 | 15 |
| High Wall type | MMK-AP0073H2UL | 208/230-1-60 | 187 | 253 | 0.2 | 0.3 | 15 |
| | MMK-AP0093H2UL | 208/230-1-60 | 187 | 253 | 0.2 | 0.3 | 15 |
| | MMK-AP0123H2UL | 208/230-1-60 | 187 | 253 | 0.2 | 0.3 | 15 |
| | MMK-AP0153H2UL | 208/230-1-60 | 187 | 253 | 0.4 | 0.5 | 15 |
| | MMK-AP0183H2UL | 208/230-1-60 | 187 | 253 | 0.4 | 0.5 | 15 |
| | MMK-AP0243H2UL | 208/230-1-60 | 187 | 253 | 0.4 | 0.5 | 15 |
| Medium Static Ducted type | MMD-AP0074BH2UL | 208/230-1-60 | 187 | 253 | 0.8 | 1.0 | 15 |
| | MMD-AP0094BH2UL | 208/230-1-60 | 187 | 253 | 0.8 | 1.0 | 15 |
| | MMD-AP0124BH2UL | 208/230-1-60 | 187 | 253 | 0.8 | 1.0 | 15 |
| | MMD-AP0154BH2UL | 208/230-1-60 | 187 | 253 | 0.9 | 1.2 | 15 |
| | MMD-AP0184BH2UL | 208/230-1-60 | 187 | 253 | 0.9 | 1.2 | 15 |
| | MMD-AP0214BH2UL | 208/230-1-60 | 187 | 253 | 1.4 | 1.8 | 15 |
| | MMD-AP0244BH2UL | 208/230-1-60 | 187 | 253 | 1.4 | 1.8 | 15 |
| | MMD-AP0304BH2UL | 208/230-1-60 | 187 | 253 | 1.4 | 1.8 | 15 |
| | MMD-AP0364BH2UL | 208/230-1-60 | 187 | 253 | 1.8 | 2.3 | 15 |
| | MMD-AP0424BH2UL | 208/230-1-60 | 187 | 253 | 2.2 | 2.8 | 15 |
| | MMD-AP0484BH2UL | 208/230-1-60 | 187 | 253 | 2.2 | 2.8 | 15 |
| High Static Ducted type | MMD-AP0304H2UL | 208/230-1-60 | 187 | 253 | 2.34 | 2.93 | 15 |
| | MMD-AP0364H2UL | 208/230-1-60 | 187 | 253 | 2.34 | 2.93 | 15 |
| | MMD-AP0484H2UL | 208/230-1-60 | 187 | 253 | 2.92 | 3.65 | 15 |
| Slim Ducted type | MMD-AP0074SPH2UL | 208/230-1-60 | 187 | 253 | 0.58 | 0.73 | 15 |
| | MMD-AP0094SPH2UL | 208/230-1-60 | 187 | 253 | 0.58 | 0.73 | 15 |
| | MMD-AP0124SPH2UL | 208/230-1-60 | 187 | 253 | 0.60 | 0.75 | 15 |
| | MMD-AP0154SPH2UL | 208/230-1-60 | 187 | 253 | 0.70 | 0.88 | 15 |
| | MMD-AP0184SPH2UL | 208/230-1-60 | 187 | 253 | 0.80 | 1.00 | 15 |

MCA : Minimum Circuit Amps FLA : Full Load Amps
MOCP : Maximum Overcurrent Protection (Amps)

### Power supply wire

Recommended wire diameter and wire length for power supply wire.

| | | |
|---|---|---|
| Power supply wiring | Wire side : 2 x AWG12<br>Ground : 1 x AWG12 or thicker | Up to 164'1"(50m) |

# 8-4. Design of control wiring

### Summary of control wiring

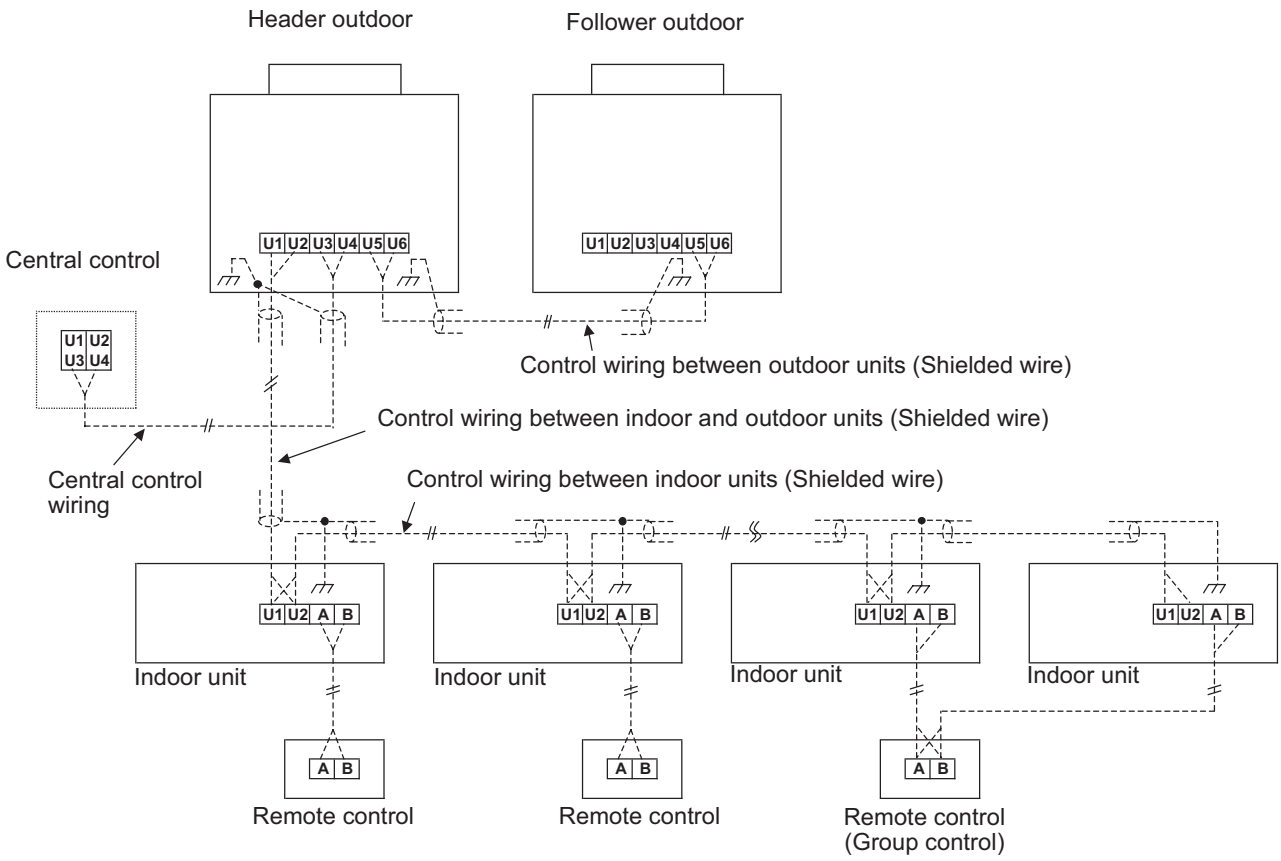


1. All system interconnecting and central control wiring should be 2 conductor shielded cable.
2. On the header unit the control wire shield and the central control wire shield should both be connected to the same ground screw in the header unit.
3. The remote control wiring can be 2 conductor un-shielded cable.
4. All system interconnecting and control wiring should be sized per table 1, 2 and 3.

## Restriction of control wiring

Be sure to keep the rule of below tables about size and length of control wiring.

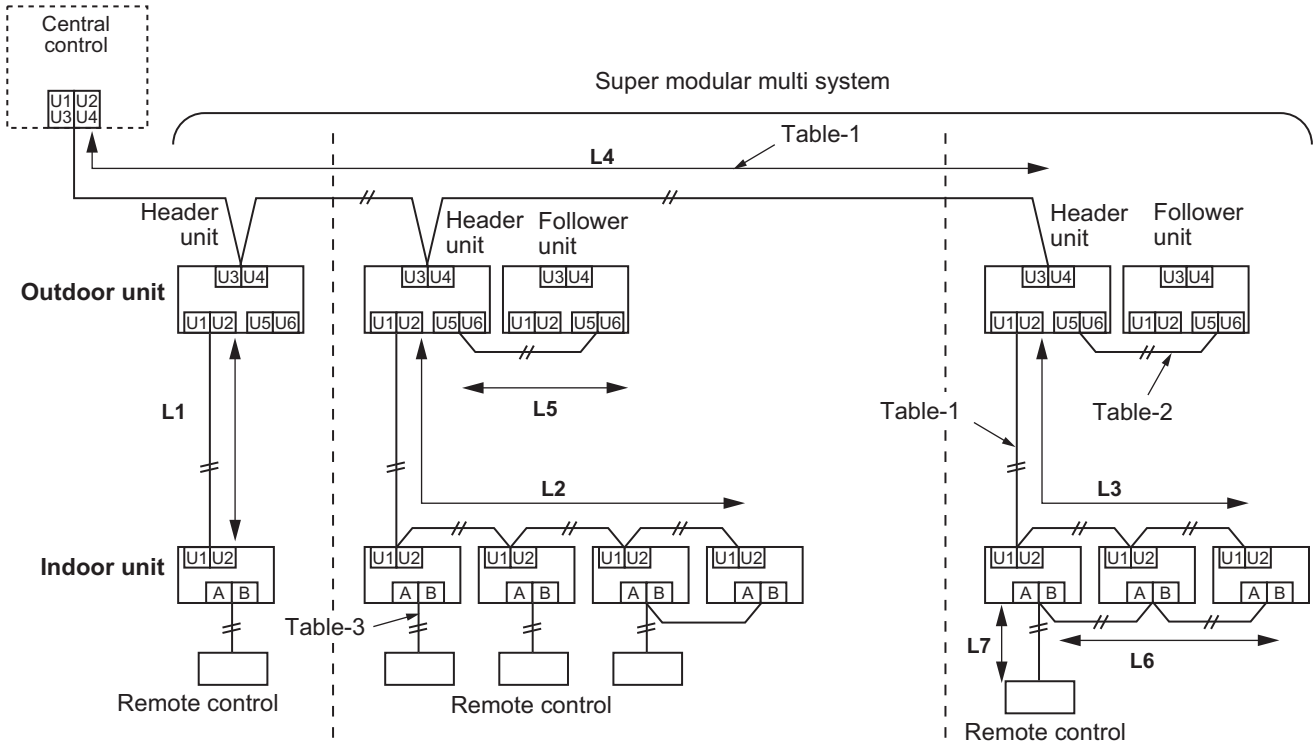


**Table-1 Control wiring between indoor and outdoor units (L1, L2, L3), Central control wiring (L4)**

| | |
|---|---|
| Wiring | 2-core |
| Type | Shielded cable |
| Size/Length | AWG16: Up to 3280 ft (1000 m) AWG14: Up to 6560 ft (2000 m) (*1) |

(*1): Total length of control wiring length for all refrigerant circuits (L1 + L2 + L3 + L4)

**Table-2 Control wiring between outdoor units (L5)**

| | |
|---|---|
| Wiring | 2-core |
| Type | Shielded wire |
| Size/Length | AWG16 to AWG14/Up to 330 ft (100 m) (L5) |

**Table-3 Remote control wiring (L6, L7)**

| | |
|---|---|
| Wire | 2-core |
| Size | AWG20 to AWG14 |
| Length | • Up to 1640 ft (500 m) (L6 + L7)<br>• Up 1310 ft (400 m) in case of wireless remote control in group control.<br>• Up to 660 ft (200 m) total length of control wiring between indoor units (L6) |

# 8-5. Wiring diagram

Model: MMY-MAP0724HT9UL

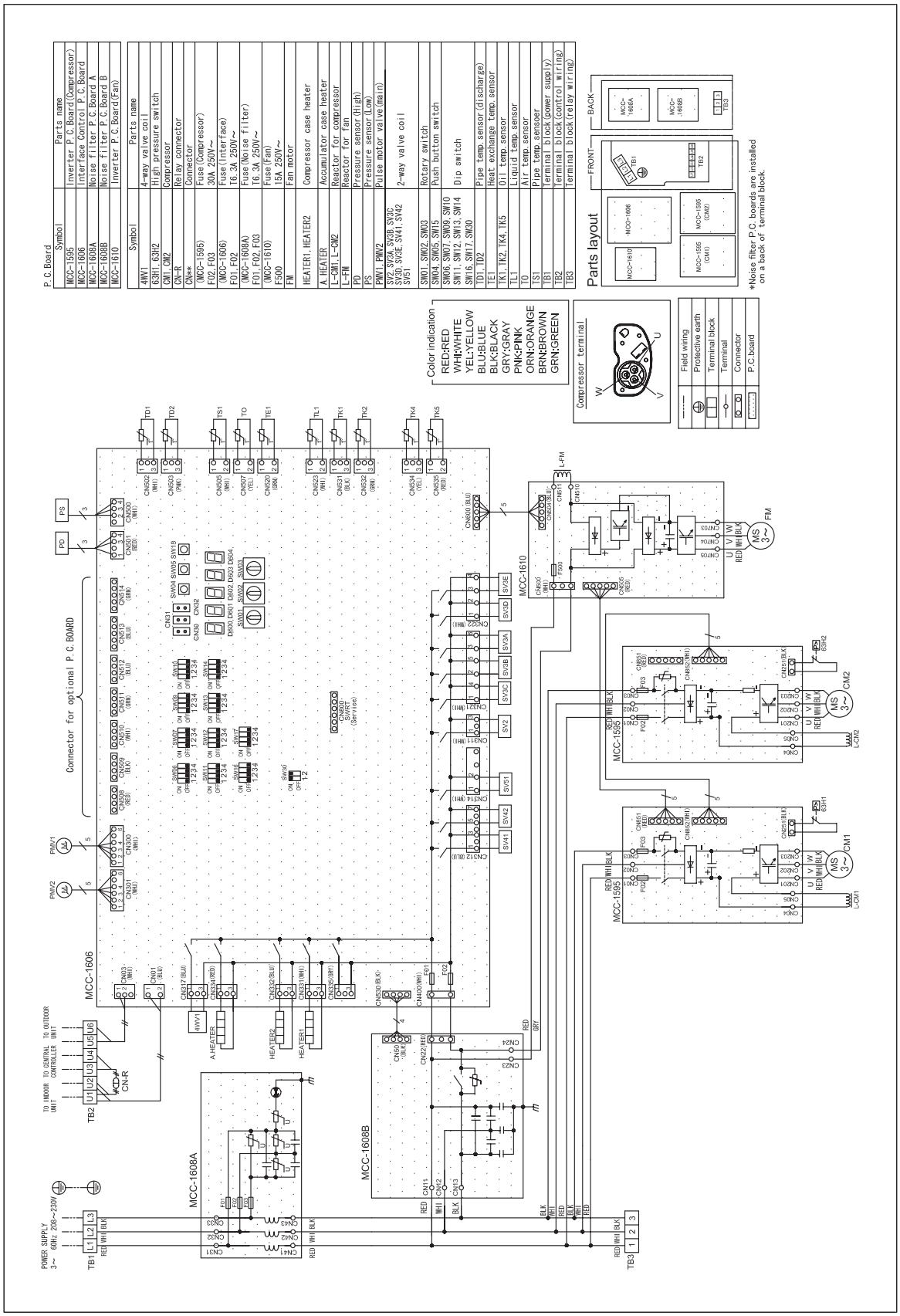

Model: MMY-MAP0724HT6UL

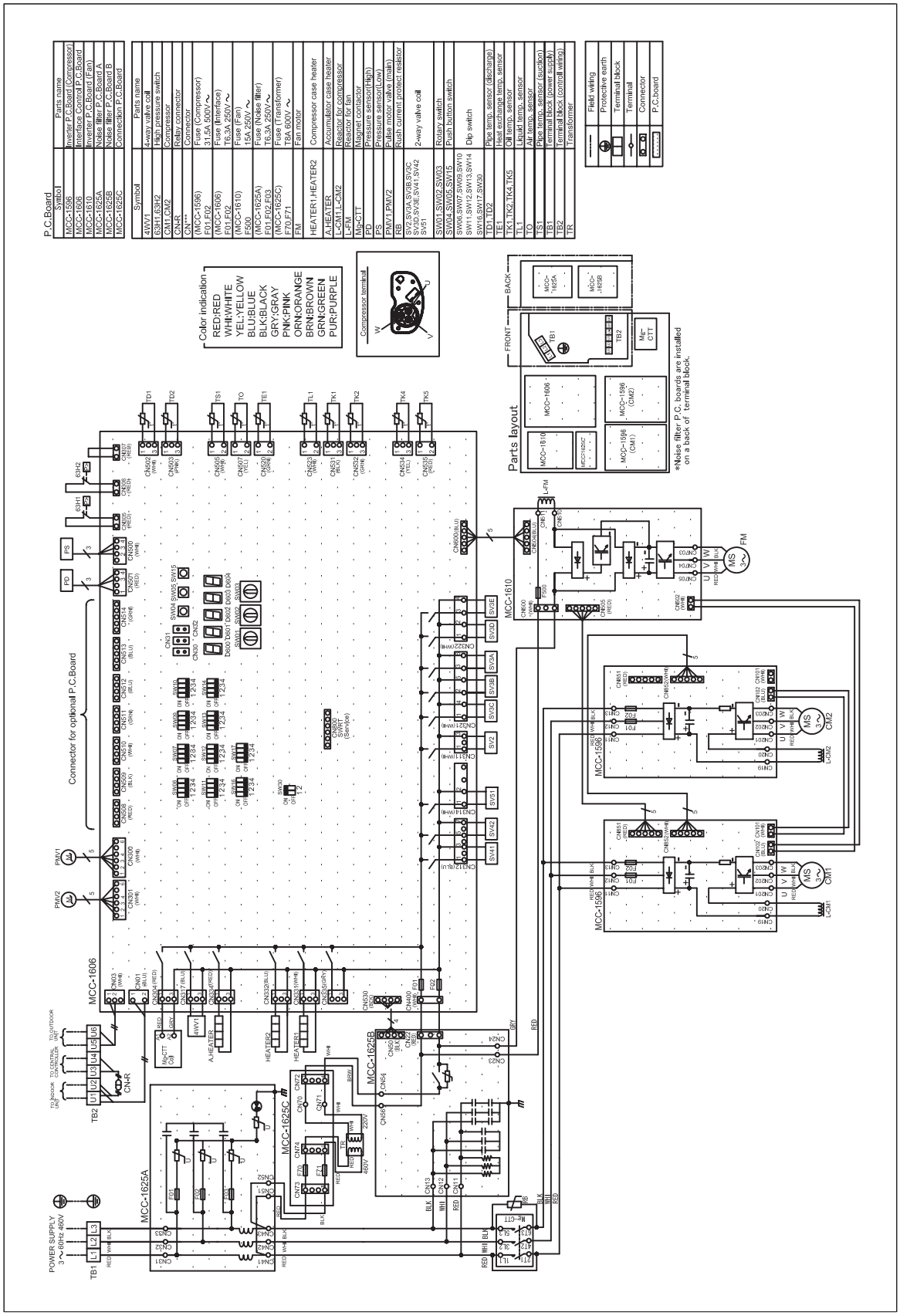
P.C.Board
Symbol
Parts name
MCC-1596 Inverter P.C.Board (Compressor)
MCC-1606 Interface Control P.C.Board
MCC-1610 Inverter P.C.Board (Fan)
MCC-1625A Noise filter P.C.Board A
MCC-1625B Noise filter P.C.Board B
MCC-1625C Connection P.C.Board
Symbol
Parts name
4WV1 4-way valve coil
63H1,63H2 High pressure switch
CM1,CM2 Compressor
CN-R Relay connector
CN** Connector
(MCC-1596) F01,F02 Fuse (Compressor)
(MCC-1606) F01 Fuse (Interface)
(MCC-1625) F01,F02 Fuse (Noise filter)
(MCC-1610) F500 Fuse (Fan)
(MCC-1625A) F01,F02,F03 Fuse (Noise filter)
(MCC-1625C) F70,F71 Fuse (Transformer)
FM Fan motor
HEATER1,HEATER2 Compressor case heater
A.HEATER Accumulator case heater
L-CM1,L-CM2 Reactor for compressor
L-FM Reactor for fan
Mg-CTT Magnet contactor
PS Pressure sensor(High)
PD Pressure sensor(Low)
PMV1,PMV2 Pulse motor valve (main)
RB Rush current protect resistor
SV2,SV3A,SV3B,SV3C SV3D,SV3E,SV41,SV42 SV51 2-way valve coil
SW01,SW02,SW03 Rotary switch
SW04,SW05,SW15 SW06,SW07,SW09,SW10 SW11,SW12,SW13,SW14 SW16,SW17,SW20 Push button switch
TD1,TD2 Pipe temp. sensor (discharge)
TE1 Heat exchange temp. sensor
TK1,TK2,TK4,TK5 Oil temp. sensor
TL1 Liquid temp. sensor
TO Air temp. sensor
TS1 Pipe temp. sensor (suction)
TB1 Terminal block (power supply)
TB2 Terminal block (controll wiring)
TR Transformer
Field wiring
Protective earth
Terminal block
Terminal
Connector
P.C.board
Color indication
RED:RED
WHI:WHITE
YEL:YELLOW
BLU:BLUE
BLK:BLACK
GRY:GRAY
PNK:PINK
ORN:ORANGE
BRN:BROWN
GRN:GREEN
PUR:PURPLE
Compressor terminal
Parts layout
FRONT
BACK
MCC-1625A
MCC-1625B
TB1
TB2
Mg-CTT
MCC-1606
MCC-1610
MCC-1596 (CM2)
MCC-1596 (CM1)
*Noise filter P.C. boards are installed on a back of terminal block.
Connector for optional P.C.Board
MCC-1606
MCC-1610
MCC-1596
MCC-1625A
MCC-1625B
MCC-1625C
POWER SUPPLY 3～60Hz 460V
TB1
TB2
CN-R
FM
CM1
CM2
L-FM
L-CM1
L-CM2
PMV1
PMV2
PS
PD
63H1
63H2
TO OUTDOOR UNIT
TO CENTRAL CONTROLLER
TO INDOOR UNIT
A.HEATER
HEATER1
HEATER2
4WV1
Mg-CTT
SW01 SW02 SW03
SW04 SW05 SW15
SW06 SW07 SW09 SW10
SW11 SW12 SW13 SW14
SW16 SW17 SW20
SW30
SW40 (Service)
SV2
SV3A
SV3B
SV3C
SV3D
SV3E
SV41
SV42
SV51
TD1
TD2
TS1
TO
TE1
TL1
TK1
TK2
TK4
TK5
F01
F02
F03
F500
F70
F71
TR
RB
CN01
CN02
CN03
CN04
CN05
CN06
CN07
CN08
CN09
CN10
CN11
CN12
CN13
CN14
CN15
CN16
CN17
CN18
CN19
CN20
CN21
CN22
CN23
CN24
CN30
CN31
CN32
CN33
CN34
CN35
CN40
CN41
CN42
CN43
CN50
CN51
CN52
CN53
CN54
CN55
CN56
CN57
CN58
CN59
CN60
CN61
CN62
CN63
CN64
CN65
CN66
CN67
CN68
CN69
CN70
CN71
CN72
CN73
CN74
CN75
CN76
CN77
CN78
CN79
CN80
CN81
CN82
CN83
CN84
CN85
CN86
CN87
CN88
CN89

Model: MMY-MAP0964HT9UL, MAP1144HT9UL

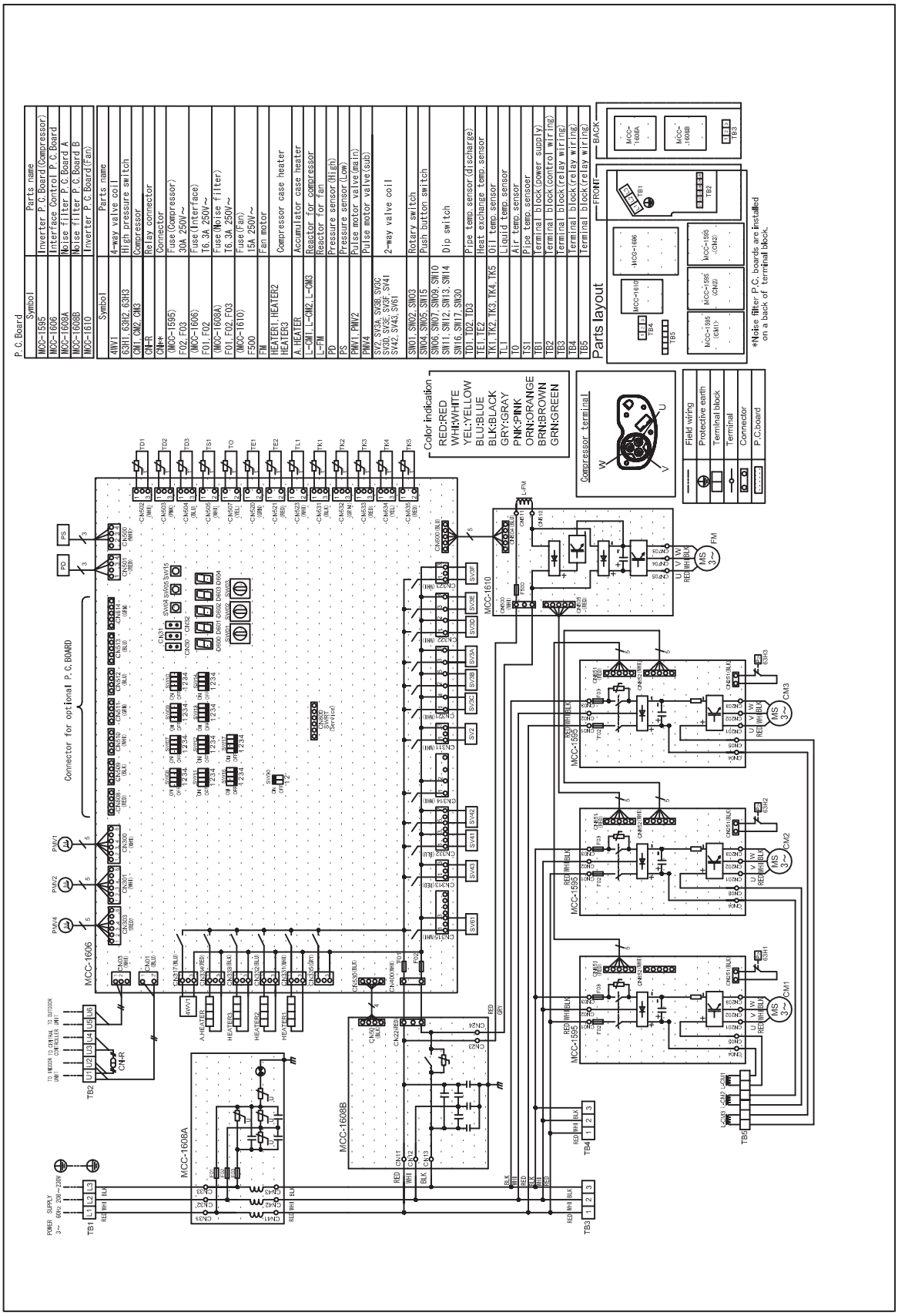

Model: MMY-MAP0964HT6UL, MAP1144HT6UL

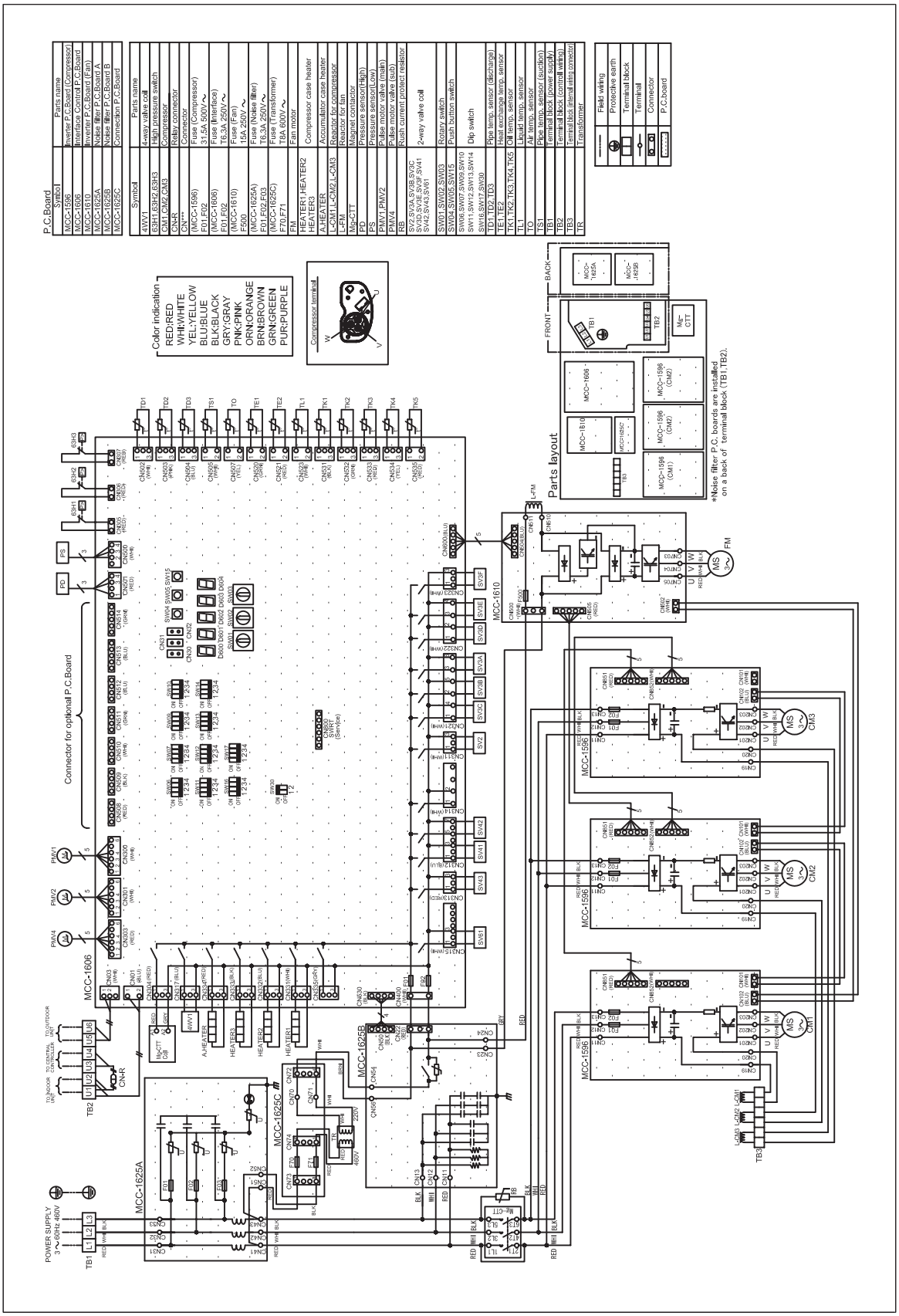

# 8-6. Connecting diagram

## SMMS-i Single unit

| Model name | Power supply |
|---|---|
| MMY-MAP0724HT9UL | 3~60Hz 208/230V |
| MMY-MAP0964HT9UL | |
| MMY-MAP1144HT9UL | |
| MMY-MAP0724HT6UL | 3~60Hz 460V |
| MMY-MAP0964HT6UL | |
| MMY-MAP1144HT6UL | |

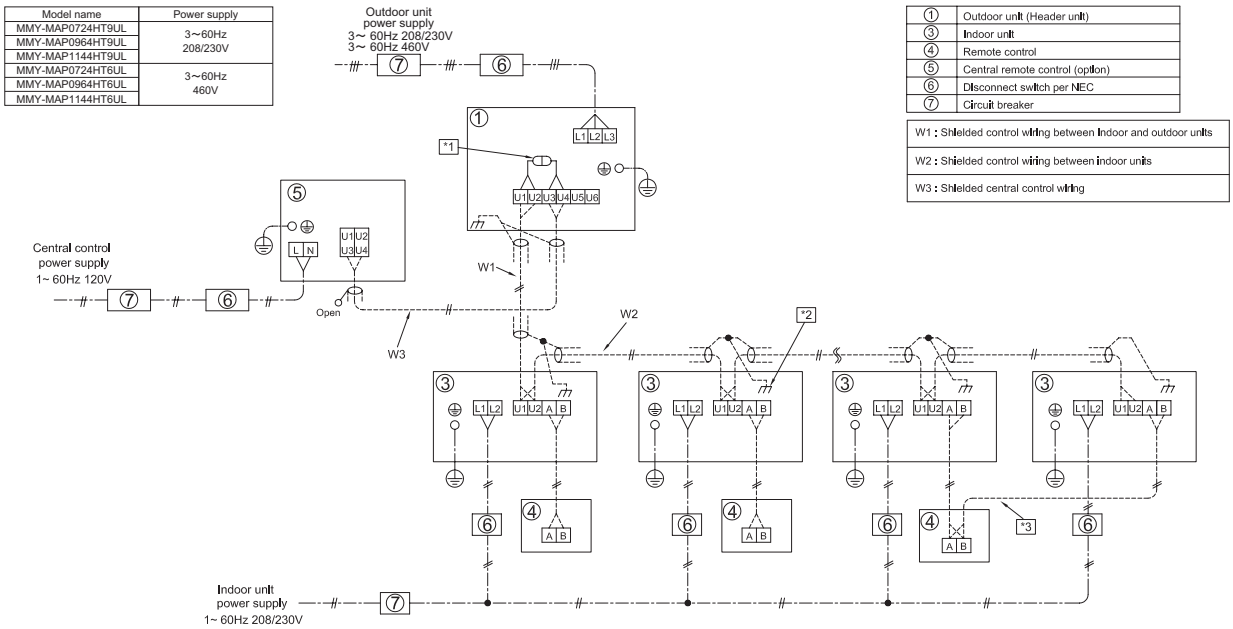


| | |
|---|---|
| ① | Outdoor unit (Header unit) |
| ③ | Indoor unit |
| ④ | Remote control |
| ⑤ | Central remote control (option) |
| ⑥ | Disconnect switch per NEC |
| ⑦ | Circuit breaker |

| |
|---|
| W1 : Shielded control wiring between indoor and outdoor units |
| W2 : Shielded control wiring between indoor units |
| W3 : Shielded central control wiring |

(Note)
1. When using a central control, plug in the connector between [U1,U2] and [U3,U4] terminal of the header unit.
2. Connect the shield of all control wiring to the cintrol ground screw on every unit. (Indoor & Outdoor)
3. Group control.
4. Power supply wiring to be per NEC and local codes.
5. For the control wires connecting indoor units, outdoor units, and between indoor and outdoor units, use 2-core shielded wires.
6. For additional details, see the individual unit wiring diagrams.(Indoor & Outdoor)

## SMMS-i Combination unit

| Model name | Power supply |
|---|---|
| MMY-AP1444HT9UL | 3~60Hz 208/230V |
| MMY-AP1684HT9UL | |
| MMY-AP1924HT9UL | |
| MMY-AP2284HT9UL | |
| MMY-AP1444HT6UL | 3~60Hz 460V |
| MMY-AP1684HT6UL | |
| MMY-AP1924HT6UL | |
| MMY-AP2284HT6UL | |

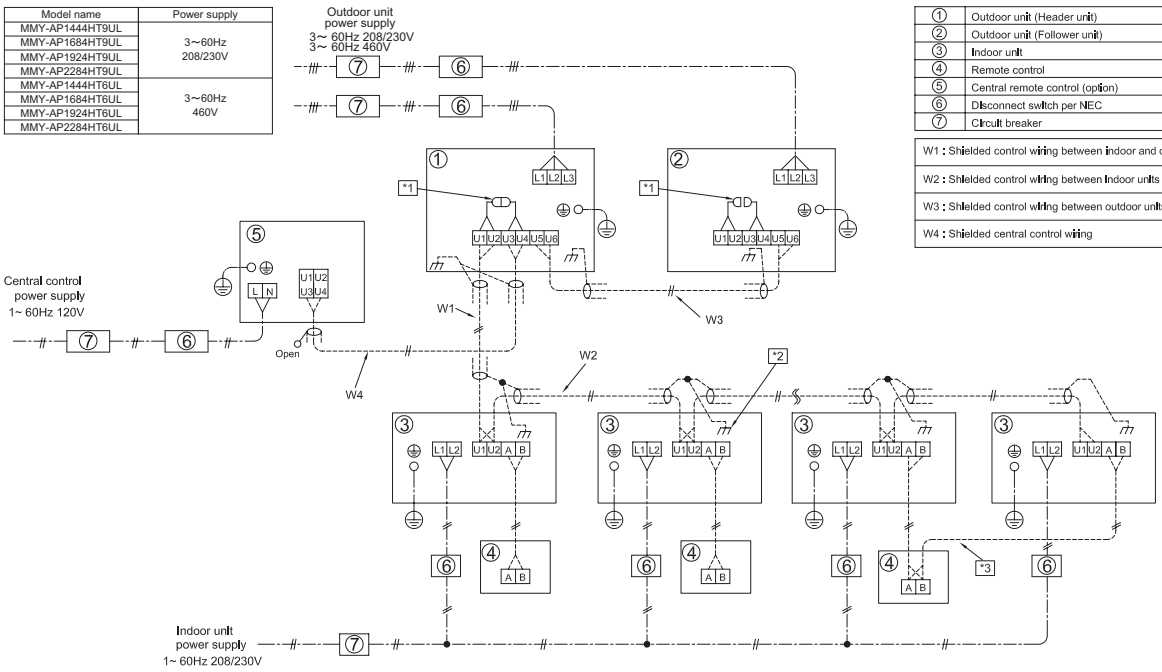


| | |
|---|---|
| ① | Outdoor unit (Header unit) |
| ② | Outdoor unit (Follower unit) |
| ③ | Indoor unit |
| ④ | Remote control |
| ⑤ | Central remote control (option) |
| ⑥ | Disconnect switch per NEC |
| ⑦ | Circuit breaker |

| |
|---|
| W1 : Shielded control wiring between indoor and outdoor units |
| W2 : Shielded control wiring between indoor units |
| W3 : Shielded control wiring between outdoor units |
| W4 : Shielded central control wiring |

(Note)
1. When using a central control, plug in the connector between [U1,U2] and [U3,U4] terminal of the header unit.
2. Connect the shield of all control wiring to the cintrol ground screw on every unit. (Indoor & Outdoor)
3. Group control.
4. Power supply wiring to be per NEC and local codes.
5. For the control wires connecting indoor units, outdoor units, and between indoor and outdoor units, use 2-core shielded wires.
6. For additional details, see the individual unit wiring diagrams.(Indoor & Outdoor)

# SMMS-i Engineering Data Book

## < For North America >

**Mar, 2012 Second Edition**

TOSHIBA CARRIER CORPORATION