SMART 2000
Digital Programmable Thermostat
Installation Manual



www.robertshaw.com

©2015 Robertshaw

2/15 – 352-00193-001

IMPORTANT SAFETY INFORMATION

	**WARNING: ELECTRICAL SHOCK HAZARD – Turn off power at the main power source by unscrewing fuse or switching circuit breaker to the OFF position before installing, removing, or cleaning this thermostat.**
	**WARNING: FIRE AND ELECTRIC SHOCK HAZARD – This device should be installed by a qualified service technician with due regard for safety as improper installation could result in a fire and electric shock hazard.**
	**WARNING: FIRE AND ELECTRICAL SHOCK HAZARD – This is a 24V AC low-voltage thermostat. Do not install on voltages higher than 30V AC.**

- Do not switch system to cool if the temperature is below 50°F (10°C). This can damage your cooling system and may cause personal injury.
- Do not short (jumper) across terminals on the gas valve or at the system control to test installation. This will damage the thermostat and void the warranty.
- Do not connect ground to any terminal in this unit.
- All wiring must conform to local and national building and electrical codes and ordinances.
- Use this thermostat only as described in the manual.

TABLE OF CONTENTS

Installation 6

Mounting the SMART 2000 Thermostat 7

Plan Your Installation 9

Wiring Diagrams 15

Before Applying Power 20

Commissioning 20

Control Logic 22

Advanced Installer Settings 23

Entering the Advanced Installer Menu 23

Using the Advanced Installer Menu 24

Functions 24

Using Remote Temperature Sensors 39

Outside Air Sensor Wiring 41

Remote Air Temperature Sensor Wiring 42

Averaging Temperature Sensors 42

Remote ON / OFF Functions 43

Using the Occupancy Mode 43
Supply Air Temperature Monitoring 44
Advanced Functions 44
ModBus Communications 44
Factory Test Mode 47
High and Low Balance Points 47
Setting Up the Heat and Cool OFF Functions 48
Adaptive Recovery 48
Power Up The System 49
Specifications 52
Troubleshooting 54
One Year Limited Warranty 59

This document is not typically left with the user as it contains information on setting values. If these are not correctly set, they may damage the heating, cooling or air conditioning system or seriously affect its performance and energy consumption.

Please read this instruction manual to understand the installation, testing and commissioning process.

This manual is to be used with the supplied User Manual.

Great care has been taken in the preparation of this manual. Uni-Line® takes no responsibility for errors or omissions contained in this document. It is the responsibility of the user to ensure this thermostat, or the equipment connected to it is operating to their respective specifications and in a safe manner.

Uni-Line reserves the right to change specifications without prior notice.

INSTALLATION

As with any heating and/or air conditioning project, careful installation is the key to a successful outcome. Time taken during this installation process will be rewarded with a satisfied customer and fewer call-backs.

The steps required to install the SMART 2000 thermostat are:

1. Read and understand this manual and the User Manual.
2. Mount the back plate in a suitable location.
3. Set the eight DIP switches to match the need of the project / user.
4. Connect wires to terminal blocks.
5. Wire the optional remote temperature sensor(s) or switches if required.
6. Power up the heating and/or air conditioning system.
7. Set the installer software options (if required).
8. Program and set up the thermostat. (The User Manual will assist with this).
9. Test the heating, cooling and other functions – Commissioning.

Mounting the SMART 2000 Thermostat

IMPORTANT: The SMART 2000 can only be as accurate as the onboard temperature sensor, or its optional remote temperature sensor(s) permit. The thermostat should be mounted in a location that is typical of the ambient room temperature. Do not install it near the floor, in a draft, behind a door, or on a non-insulated, exterior wall. Install the thermostat away from exposure to sunlight and four to five feet (12.2 to 1.5 m) above the floor.

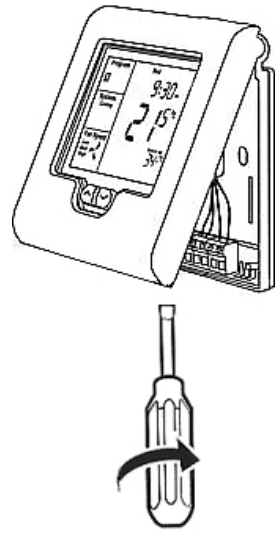

Figure 1

- Lift the cover (Figure 1) on the housing to expose a slot at the bottom. Take notice of the decorative cover hinge points and the connection between the two halves.
- Insert a screwdriver or coin into the slot and twist. This will separate the two halves.

- Continue to swing the top half upward. This will release the decorative cover hinge and the tabs holding the top half in place.
- Pull the control wires through the large opening in the base plate.
- Position the base plate on the wall and attach it with appropriate fasteners (Figure 2) (two screws with drywall anchors are supplied). The base plate should be visibly level.
- Block any holes where wires are pulled through a wall opening. This will prevent drafts from entering the back of the thermostat.

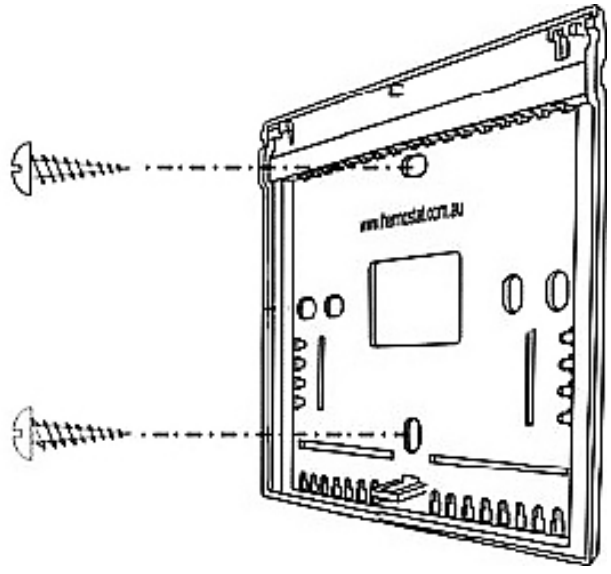

Figure 2

If this installation will be using ModBus controls or remote sensors, be certain to include the proper wires to make those connections.

Plan Your Installation

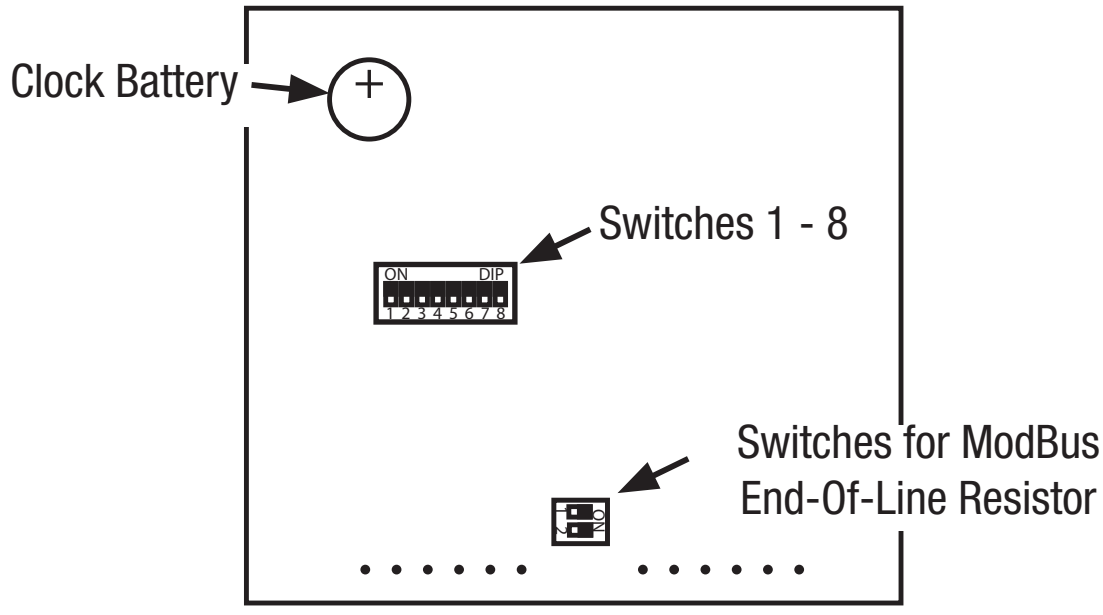

Figure 3

In addition to the standard thermostat wiring, the SMART 2000 has:

- Two groups of switches (DIP switches)
- ModBus communication terminals (leave OFF if communication errors occur)
- Two terminals for using remote sensors and contacts
- Battery for program clock back-up (lithium battery CR1220)

The switches must be set correctly for each system configuration. Follow these steps:

1. Review the settings in Table 1.
2. Read the switch descriptions.
3. Mark or write down the switch positions that you will use.
4. In the figures that follow, find the wiring diagram that accurately describes your equipment.
5. Review the switch settings next to the wiring diagram. If there are any differences between that list and your selections, review your list. Be certain you have the correct wiring diagram and choices for switch positions.

The ModBus and TT terminals will be described later in this manual.

Table 1 Hardware Switch Settings (Full descriptions on following pages)

Switch	Off	On
Sw1 – Fan Speeds	1 Speed Fan (2 Heat / 2 Cool)	3 Speed Fan (1 Heat / 1 Cool)
Sw2 – Equipment Type	Heat / Cool	Heat Pump (O/B terminals)
Sw3 – Stages	1 Stage	2 Stages
Sw4 – Reversing Valve If Sw 2= ON – Heat Pump	Energize in cool (O)	Energize in heat (B)
Sw4 – Fan Mode If Sw 2= OFF – Heat/cool	Fan Control by Heater (HG)	Fan Control by Thermostat (HE)
Sw5 – Anti-Cycle Timer	Off	4 Minutes
Sw6 – Operation	Manual Thermostat	Programmable Thermostat
Sw7 – Minimum Run	2 Minutes	6 Minutes
Sw8 – Program Type		
If Sw 6 = ON – Programmable	Commercial Program	Residential Program
Sw8 – Setpoints		
If Sw 6 = OFF – Manual	Single Setpoint	Two Setpoints

Switch 1 – Relay Assignment

Switch 1 sets the function of the fan relays as either: 3 fan speeds with 1 heat and 1 cool operation or single fan speed with 2 heat and 2 cool operations.

Switch 2 – Equipment Type

Both heat with add-on cooling or heat pump types of systems can be controlled.

Heat / Cool Systems use the W terminal(s) only for heating and the Y terminal(s) only for cooling.

Heat Pump Systems use the Y terminal(s) for BOTH heating and cooling. The W1 terminal is used to control the reversing valve which determines heating or cooling mode.

Switch 3 – Equipment Stages

When it is necessary to control a single stage A/C system fitted with auxiliary heating elements, turn Sw3 OFF, thereby selecting single stage mode. Heating elements controlled by the W2 output are now assigned stage 2 heat.

Switch 4 – Reversing Valve or Fan Mode

When Sw2 is ON it is set for Heat Pump mode. This switch will set the reversing valve logic (O/B). When Sw2 is OFF it is set for Heat Cool Mode. This switch will then set the mode for the Heater fan logic (HG or HE mode).

Switch 5 – Anti-Cycle Timer

To protect some A/C systems it is preferred that under no circumstances should the compressor start within four minutes of it switching off.

NOTE: When power is first applied to the thermostat it assumes that the compressor has just stopped and applies this anti-cycle delay time before starting.

Switch 6 – Thermostat Operation

To suit the varying requirements of the user, the thermostat can be set (Sw6 ON) as a programmable thermostat. A time clock is used to automatically control the building temperature to a programmed temperature profile. When Sw6 is OFF, the thermostat is in manual mode which requires the user to turn the thermostat ON or OFF, and adjust the temperature setpoint manually.

Switch 7 – Minimum Run Time

To conserve energy and protect the A/C system, limit the number of times the heating and or cooling system can run in one hour. This switch sets the heating and cooling equipment to a minimum run time of two or six minutes. Once the heating or cooling has started, it must run for this minimum set time.

Switch 8 – Thermostat Control Logic

This switch has two functions based on the position of Sw6. When the thermostat is set as a programmable thermostat (Sw6 ON), Sw8 determines whether a commercial program or residential program will be followed. When Sw6 is OFF, the thermostat is used as a non-programmable thermostat. This switch will then set a single setpoint mode (Sw8 OFF) or (Sw8 ON) for separate heating and cooling setpoints. The two setpoint mode also permits the user to select a separate day and night setpoint if required.

Wiring Diagrams

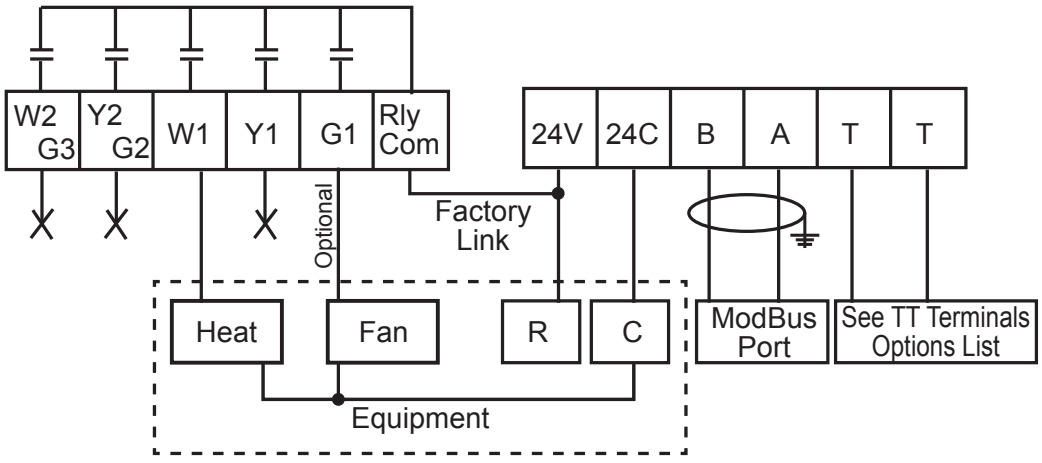

Switch Settings
Sw1 = Off (1 speed fan)
Sw2 = Off (HC System)
Sw3 = Off (Single Stage)
Sw4 = Off (HG)
Sw5 = Installer preference
Sw6 = User requirements
Sw7 = Installer preference
Sw8 = User requirements

Set Advanced Installer menu Fn=H to show heat menus only

Figure 4 Heat Only System With Fan Control

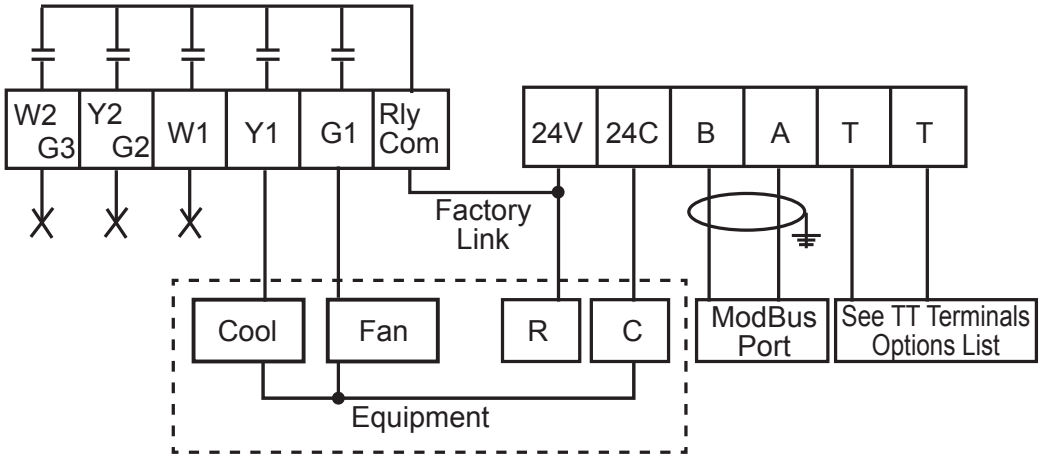

Switch Settings
Sw1 = Off (1 speed fan)
Sw2 = Off (HC System)
Sw3 = Off (Single Stage)
Sw4 = N/A
Sw5 = Installer preference
Sw6 = User requirements
Sw7 = Installer preference
Sw8 = User requirements

Set Advanced Installer menu Fn=C to show cool menus only

Figure 5 Cool Only System with One Speed Fan

Wiring Diagrams

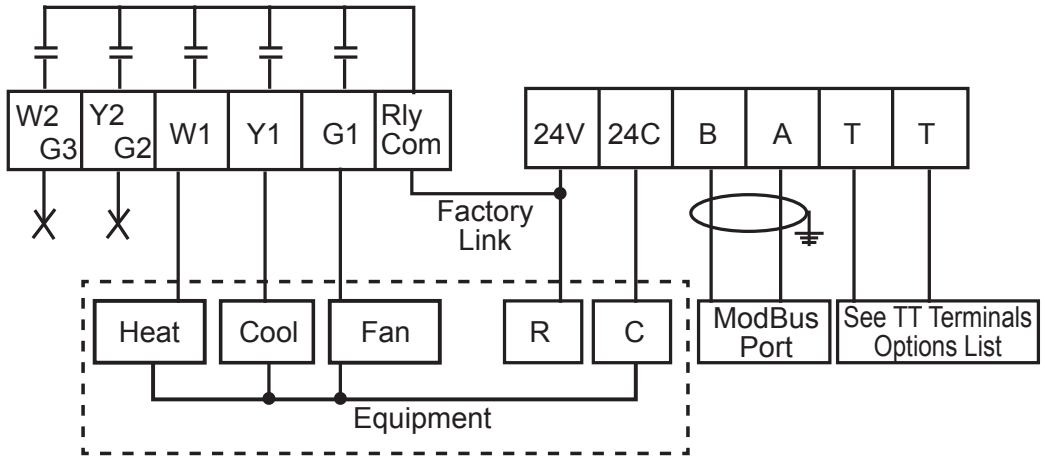

Switch Settings
Sw1 = Off (1 speed fan)
Sw2 = Off (HC System)
Sw3 = Off (Single Stage)
Sw4 = Off (HG)
Sw5 = Installer preference
Sw6 = User requirements
Sw7 = Installer preference
Sw8 = User requirements

Figure 6 One Heat With Add On Cool

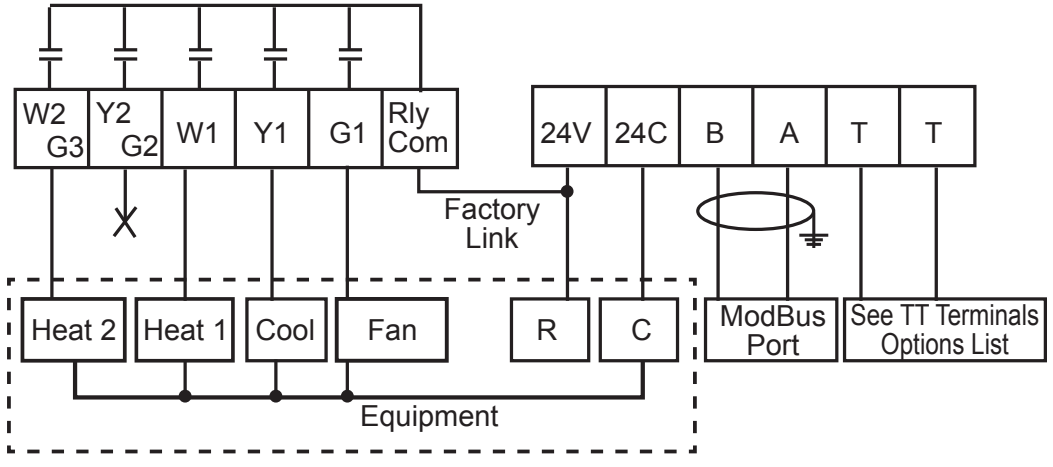

Switch Settings
Sw1 = Off (1 speed fan)
Sw2 = Off (HC System)
Sw3 = On (Two Stage)
Sw4 = Off (HG)
Sw5 = Installer preference
Sw6 = User requirements
Sw7 = Installer preference
Sw8 = User requirements

Figure 7 Two Stage Gas Heat One Stage Add On Cool

Wiring Diagrams

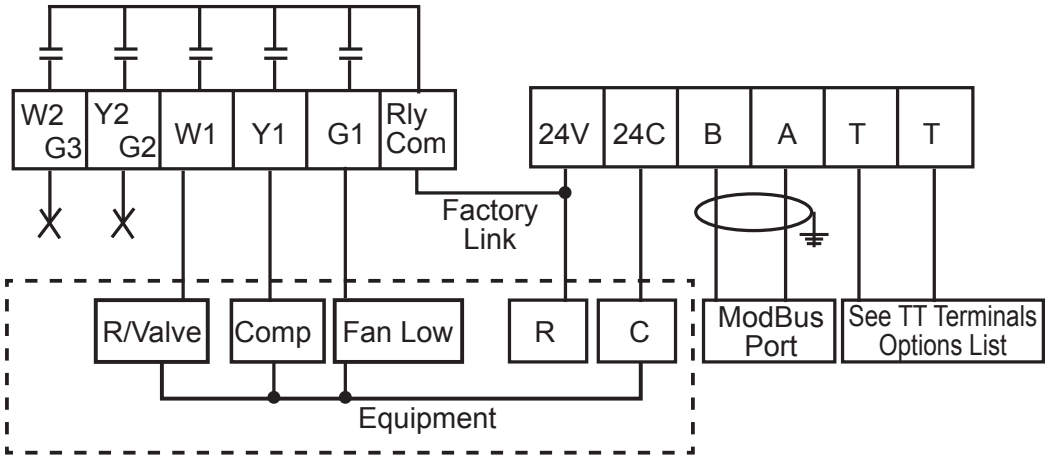

Switch Settings
Sw1 = Off (1 speed fan)
Sw2 = On (HP System)
Sw3 = Off (Single Stage)
Sw4 = User requirements
Sw5 = Installer preference
Sw6 = User requirements
Sw7 = Installer preference
Sw8 = User requirements

Figure 8 One Stage Heat Pump One Speed Fan

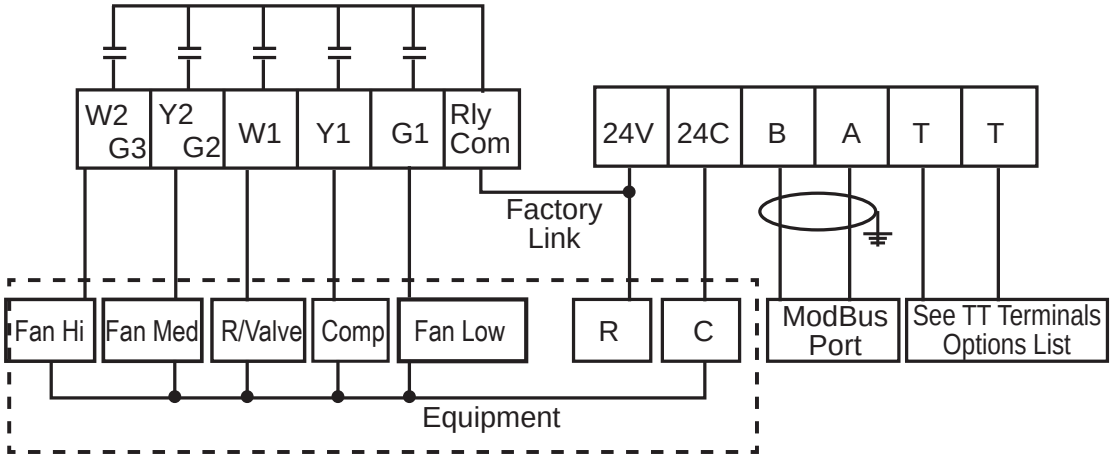

Switch Settings
Sw1 = On (3 speed fan)
Sw2 = On (HP System)
Sw3 = Off (Single Stage)
Sw4 = User requirements
Sw5 = Installer preference
Sw6 = User requirements
Sw7 = Installer preference
Sw8 = User requirements

Figure 9 One Stage Heat Pump Three Speed Fan

Wiring Diagrams

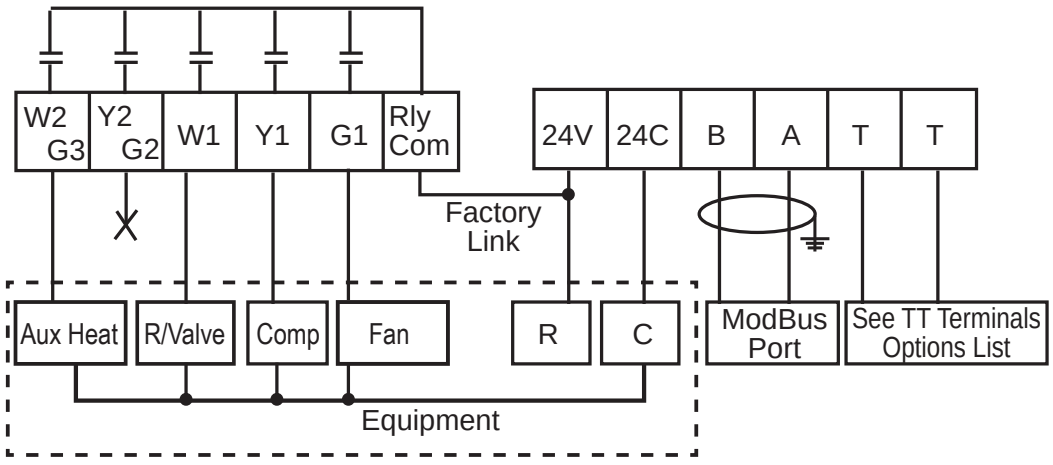

Switch Settings
Sw1 = Off (1 speed fan)
Sw2 = On (HP System)
Sw3 = Off (Single Stage)
Sw4 = Equipment Specific
Sw5 = Installer preference
Sw6 = User requirements
Sw7 = Installer preference
Sw8 = User requirements

Figure 10 One Stage Heat Pump With Auxiliary Heat One Speed Indoor Fan

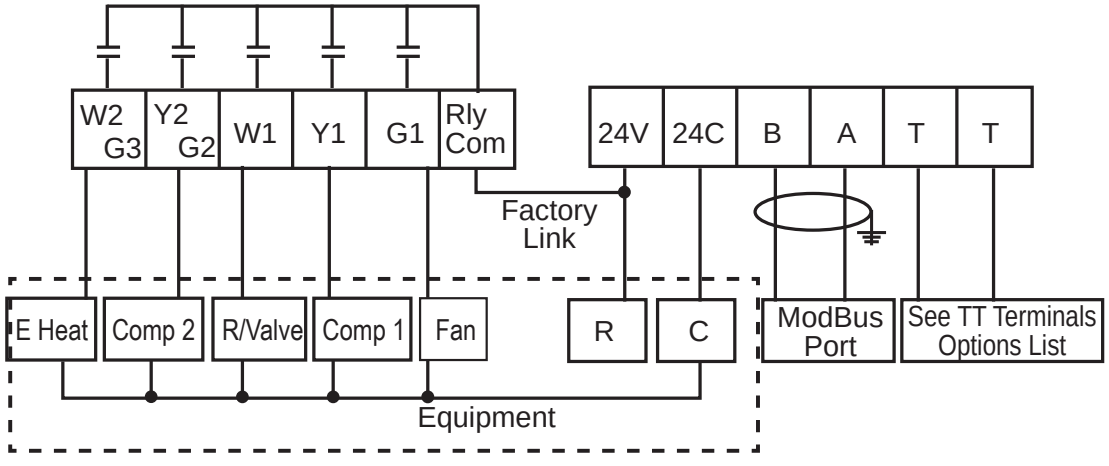

Switch Settings
Sw1 = Off (1 speed fan)
Sw2 = On (HP System)
Sw3 = On (Two Stage)
Sw4 = On Heat (B)/Off Cool (O)
Sw5 = Installer preference
Sw6 = User requirements
Sw7 = Installer preference
Sw8 = User requirements

Set Advanced Installer Menu
H3 = EH for W2 relay to control
Emergency Heat System

Figure 11 Two Stage Heat Pump With Emergency Heat

Wiring Diagrams

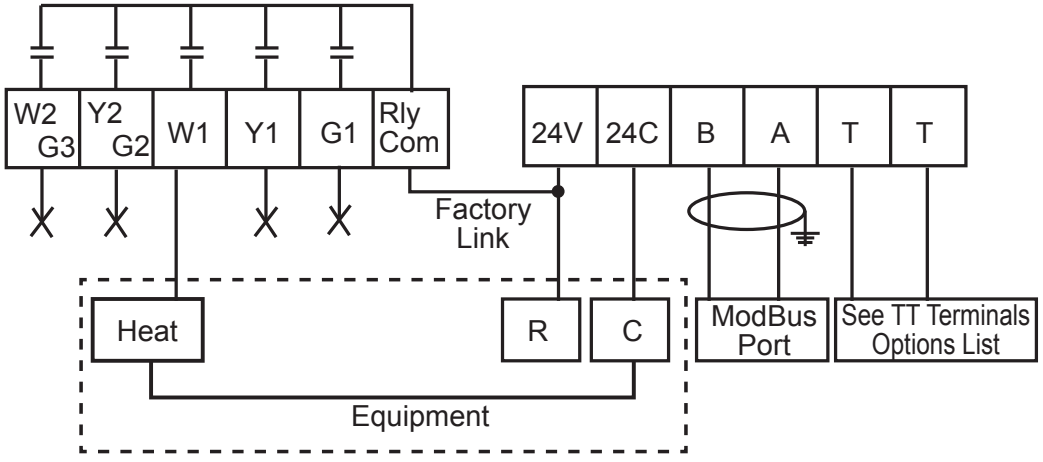

Switch Settings
Sw1 = Off (1 speed fan)
Sw2 = Off (HC System)
Sw3 = Off (Single Stage)
Sw4 = Off (HG)
Sw5 = Installer preference
Sw6 = User requirements
Sw7 = Installer preference
Sw8 = User requirements

Set Advanced Installer menu FN=H to show heat menus only

Figure 12 Gas Heat

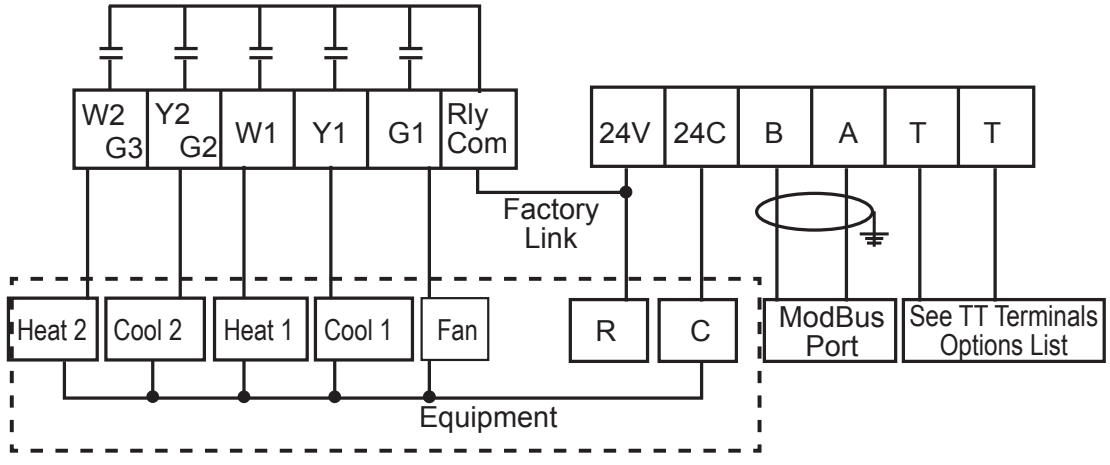

Switch Settings
Sw1 = Off (1 speed fan)
Sw2 = Off (HC System)
Sw3 = On (Two Stage)
Sw4 = Off (HG)
Sw5 = Installer preference
Sw6 = User requirements
Sw7 = Installer preference
Sw8 = User requirements

Figure 13 Two Stage Gas Heat Two Stage Add On Cool

If this installation will be using ModBus Communications, read the section ModBus Communications on page 44 of this manual.

If this installation will be using Remote Sensors, read the section Using Remote Temperature Sensors on page 39 of this manual.

Before Applying Power

Read the sections Commissioning and Advanced Installer Settings. Review each setting and understand how it will affect your installation. Plan ahead for any changes you will make.

COMMISSIONING

As with any thermostat, commissioning ensures that the thermostat and the equipment connected to it are operating correctly and as expected. Although the SMART 2000 is a multi-functional thermostat, commissioning is a step-by-step process. Follow the steps detailed below and use the Troubleshooting Guide on page 54 if you encounter a problem.

When the thermostat is fitted to the base plate and when 24V AC power is first applied, the LCD should briefly show all available segments (an LCD function test), then display the software version number before displaying the time and operating mode.

The SMART 2000 is fitted with a number of safety and energy saving time delays. If desired, these can be disabled for commissioning purposes by entering the Advanced Installer Mode and setting the CD=00 value to read CD=01. After exiting the Advanced Installer Menu you will note a  WRENCH icon flashing on the LCD to remind you that Commissioning Mode is ON.

IMPORTANT: After commissioning has been completed, it is important to disable Commissioning Mode by entering the Advanced Installer Menu once again and setting the CD = 01 value back to CD = 00.

NOTE: When in Commissioning Mode, ALL time delays are either OFF or reduced to an extremely low value. It is therefore normal to potentially call for 3rd stage heating almost instantly 0.5 degrees below the heating setpoint.

If you choose not to use Commissioning Mode you may see various words and icons flashing in the LCD whenever a time period is in use. For example, the word HEAT may flash to indicate heating is required but being held OFF by the four minute anti-cycle timer. Or the word HEATING may be flashing to indicate the setpoint has been achieved however heating is being held ON by the minimum run timer.

For the SMART 2000, anything that flashes is a time period overriding what would normally be expected to occur. This indicates a function is being held ON or OFF momentarily. Please be patient.

Control Logic

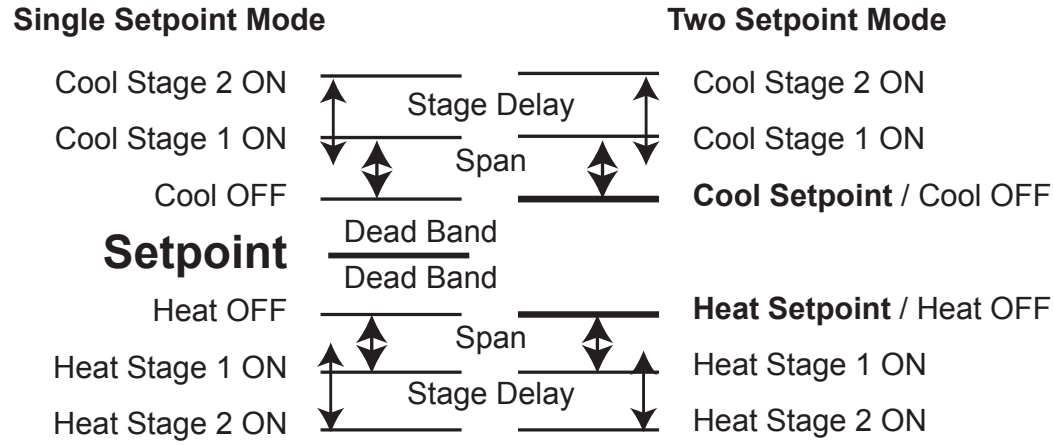

Figure 14

Figure 14 provides a general insight into the control logic of the thermostat. Please review the action of the DB = XX, the SP = XX and SD = XX Advanced Installer control capabilities in both the two setpoint and single setpoint modes. By adjusting these three values to suit the needs of the user or equipment, it is possible to achieve extremely tight temperature control.

In single setpoint mode (Sw8 = OFF) the individual heating and cooling setpoints are replaced by a “Deadband” where the heating and cooling differential is controlled by an installer set value. This is the simplest method of temperature control.

It is also possible to adjust how quickly the thermostat responds to room temperature changes by adjusting the RS = XX value in the Advanced Installer Menu. The lower this setting, the faster the thermostat will respond to room temperature fluctuations. The larger the setting, the slower the thermostat will respond to changes in room temperature.

ADVANCED INSTALLER SETTINGS

The SMART 2000 is fitted with many advanced functions that can be fine tuned by the installer to specifically match the needs of the user. Normally these functions will not need to be altered from the factory default position. There may be times when you wish to alter a setting or control capability so that the performance will match a particular application. On the next few pages, there are detailed explanations of these functions and their range of control.

While in the Advanced Installer Menu, all thermostat equipment control functions will be suspended. Normal equipment operation will continue when you have exited this menu (after any anti-cycle delays or safety delays have terminated).

Entering the Advanced Installer Menu

To enter the Advanced Installer Menu, press and hold the O/RIDE button for 15 seconds. After 15 seconds, the LCD will show 88:15.

Adjust this value to 88:21 – the factory default PIN (or your previously selected value) by using the ▲ or ▼ buttons. Press the O/RIDE button to enter the menu.

If you have entered the correct PIN, you will be given the first menu option. If you have entered an incorrect PIN, you will be exited from this menu.

Using the Advanced Installer Menu

To move forward through the Advanced Installer Menu items, press the O/RIDE button. To move backwards through the Advanced Installer Menu items, press the PROG button.

To adjust a value in the Advanced Installer Menu, press the ▲ or ▼ buttons.

To exit the Advanced Installer Menu, press the MODE button, the FAN button or wait 80 seconds.

The functions with their default settings are listed in the order that they appear in the Advanced Installer Menu.

Functions

PN = 21 KEYBOARD LOCK PIN

This is the required PIN for future entry into the Advanced Installer Menu. Range 00 to 99 in 01 steps. To prevent accidental PIN changes, you must press and hold the ▲ or ▼ buttons for longer than 1 second to change the PIN value.

CAUTION: If you change this value and forget your new PIN, you may need to return the thermostat to the place of purchase for unlocking. There may be a fee for this service.

LC = 0 KEYBOARD LOCK LEVEL

Programmable Mode (SW6=ON)

LC = 00: Keyboard Lock OFF
LC = 01: All buttons are locked except the temperature ▲ or ▼ buttons*
LC = 02: All buttons are locked except the O/RIDE button and temperature ▲ or ▼ buttons*
LC = 03: FAN and PROG buttons are locked*
LC = 04: FAN, PROG and O/RIDE buttons are locked *
LC = 05: All buttons locked except O/RIDE
LC = 06: All buttons locked

Manual Mode (SW6=Off)

LC = 00: Keyboard Lock OFF
LC = 01: All buttons are locked except the MODE button
LC = 02: All buttons are locked except the MODE and temperature ▲ or ▼ buttons*
LC = 03: FAN and O/RIDE buttons are locked*
MODE button can only select Auto (Heat and Cool) and OFF
LC = 04: O/RIDE Button is locked*
MODE button can only select Auto (Heat and Cool) and OFF

*The temperature ▲ or ▼ buttons range can be limited in the HL and CL menus.

HL = 95 (35C) HEATING LIMIT (OR HIGH LIMIT)

The highest heating value permitted to be set by the user
Adjustable between 41 to 120°F (5 to 49°C)

CL = 45 (7C) COOLING LIMIT (OR LOW LIMIT)

The lowest cooling value permitted to be set by the user
Adjustable between 43 to 122°F (6 to 50°C)

CF = F TEMPERATURE DISPLAY FORMAT

Degree F or degree C display type. Affects all user and installer menu items

C1 = 0.0 FITTED SENSOR CALIBRATION

Calibration offset for the internal sensor
Adjustable range +/- 9 °F degrees (+/-4.5 °C degrees) in 0.1 steps

TC = 12 TIME CLOCK

TC = 12: 12-hour time clock
TC = 24: 24-hour time clock
TO = 0: No time clock shown (manual mode only Sw6 = OFF)

TD = 0 TEMPERATURE DISPLAY

TD = 0: The thermostat will display both the room and set temperatures
TD = 1: The thermostat will display set temperature only

AH = 2 AFTER HOURS OVERRIDE TIMER

Start/Stop Mode: Commercial Thermostat Mode (Sw6 = ON, Sw8 = OFF)
After Hour Run Time Period: Adjustable range 0 (OFF) to 12 hours in 0.5 steps
Setback (1, 2, 3 ,4) Mode: Residential Programmable Mode (Sw6 = ON, Sw8 = ON). Temporary program override period.
OFF = Override till next program change or 1 - 12 hours (fixed time override)

ST = OFF START PROGRAM TEMPERATURE (COMMERCIAL MODE)

Start/Stop Mode only (Sw6 = ON, Sw8 = OFF)
This sets the default temperature that will be used each time the Start program begins, regardless of any adjustments the user may have made previously. Adjustable between OFF and 59 to 95°F (15 to 35°C). If set to OFF, the user setpoint will not be automatically reset to a default value each day.

SC = OFF STOP COOLING TEMPERATURE (COMMERCIAL MODE)

Start/Stop Mode Only. (Sw6 = ON, Sw8 = OFF)
Cooling temperature that will be maintained when running the STOP program (Night Setback). Adjustable between 43 to 122°F (6 to 50°C) + OFF.

SH = OFF STOP HEATING TEMPERATURE (COMMERCIAL MODE)

Start/Stop Mode Only. (Sw6 = ON, Sw8 = OFF)
Heating temperature that will be maintained when running the STOP program (Night Setback). Adjustable between 41 to 120°F (5 to 49°C) + OFF.

DB = 1 (0.5) SINGLE SETPOINT DEADBAND (SEE PAGE 22)

Deadband between Heat and Cool setpoints when in single setpoint mode (Sw8 = OFF).
Adjustable between 0 and 10 degrees in 1 degree steps for Fahrenheit.
Adjustable between 0 and 10 degrees in 0.5 degree steps for Celsius.

FO = 0 FAN OPTIONS - ADVANCED FAN FUNCTIONS

This function is only enabled when the selected fan mode is Fan ON.
FAN ON will be displayed in the LCD to confirm the mode.

FO = 0: Default Residential Mode. The fan will run continuously, 24 hours a day seven days a week.

FO =1: The fan will continue to run after the cooling stops to ensure maximum fresh air ventilation and to aid in cooling. The fan will stop after the heating stops. This is done to prevent cold drafts that may occur on cold days when A/C system is heating.

FO = 2: Default in Start Stop Mode. Available only if in Programmable Mode (Sw6 = ON). The Fan will Run continuously from Program # 1 (or Start) Program to Program #4 (or Stop) Program. It will then run in AUTO mode overnight to maintain the night time setpoints.

FO = 3: Available only if in Programmable Mode (Sw6 = ON). This mode is the combination of option 1 and option 2 given above.

FP = 1 FAN PURGE TIME PERIOD (FAN RUN ON)

If fan mode is Auto Fan, the indoor fan will run for FP = XX minutes after heating or cooling has stopped to extract any stored energy in the coils etc (Necessary for electric element heating).
Adjustable between 0 to 5 minutes in 1-minute intervals.

FN = A FUNCTION - AVAILABLE EQUIPMENT MODES

FN = A: Select if controlling a Heating and Cooling system, and require Auto Changeover mode.

FN = C: Select if controlling a Cooling only system (disables heating menus).

FN = H: Select if controlling a Heating only system (disables cooling menus).

FN = - (dash): This mode will set the thermostat to Heat Only, Cool Only or OFF. (Emergency Heat will also be selectable if installed).

FN = DA: Do not use.

FN = DC: Do not use.

FN = D-: Do not use.

H3 = OF W2 RELAY FUNCTION

Only operates in single fan speed HP mode (Sw1 = OFF and Sw2 = ON)

H3=OF: W2 relay is used as 2nd (or 3rd) stage Auxiliary Heat

H3=EH: W2 relay is used to control an Emergency Heating system

H3=AH: W2 relay is used to control an Add On Heat system

H3=AL: Will permit both Auxiliary Heat and Emergency Heating mode (both use W2 relay)

H3=FF: Set up in Fossil Fuel Mode (Compressor stops with Auxiliary heat)

TT = RS TT TERMINAL FUNCTION FOR REMOTE SENSORS (SEE PAGE 39)

TT = OA: Connect the outside air temperature sensor to the TT terminals to display the outside Air Temperature. Required for all outside air control functions to operate.

TT = RS: Connect the remote room temperature sensor to the TT terminals to measure the temperature at a remote location away from the thermostat. Disables the temperature sensor fitted to the thermostat.

TT = AV: The TT terminals will average the temperature measured by the thermostat internal sensor and remote room temperature sensor(s).

TT = OF: A closed contact on the TT terminals will switch the thermostat ON or OFF. More detail on this function provided on page 43.

TT = OC: A closed contact on the TT terminals will switch the thermostat to Occupied Mode, where the temperatures for functions OC and OH will replace the user set temperatures. See page 43.

TT = DA: The thermostat will broadcast the measured temperature from the remote temperature sensor via ModBus. It will not display this value on the LCD, nor is it used for any control option. This mode is intended to provide system feedback to the ModBus master only.

TT = 2P: The function is intended for controlling a two pipe fan coil. The mode of the thermostat (heating or cooling) will be determined solely on the temperature as measured by the remote sensor. The remote sensor (SMART-R-03) is typically strapped to the fan coil water supply line. The mode button only permits the user to select OFF or ON, where ON is either heat or cool mode based on the remote sensor temperature.

AF=0 ANTI-FREEZE FUNCTION

AF = 0: Anti-freeze function OFF

AF = 1: Room temperature will not be permitted to fall below 41°F (5°C)

OH = OFF OCCUPIED MODE HEAT SET (SEE PAGE 43)

Only operates if TT = OC
This is the heating temperature that will be used in Occupied Mode and will temporarily replace the user heat setpoint while the TT terminals are shorted together. Adjustable range is 41 to 120°F (5.0 to 49°C)

OC = OFF OCCUPIED MODE COOL SET (SEE PAGE 43).

Only operates if TT = OC.
This is the cooling temperature that will be used in Occupied Mode and will temporarily replace the user cool setpoint while the TT terminals are shorted together. Adjustable range is 43 to 122°F (6.0 to 50°C)

SP = 1 STAGE 1 SPAN (SEE PAGE 22)

Hysteresis for Stage One.
(Difference between heating and cooling turning ON and OFF)
SP = 1: 0.5 degree
SP = 2: 1.0 degree
SP = 3: 1.5 degree

SD = 2 STAGE 2 SPAN (SEE PAGE 22)

Hysteresis for Stage Two.
(difference between heating and cooling turning ON and OFF)
SD = 1: 0.5 degree
SD = 2: 1.0 degree
SD = 3: 1.5 degree

S3 = 3 STAGE 3 HEAT SPAN (SEE PAGE 22)

When set to two stage heat pump (Sw2 = ON), this value sets the span for the 3rd stage heating.
S3 = 1: 0.5
S3 = 2: 1.0
S3 = 3: 1.5

SU = 10 SMART UPSTAGE

When the room temperature is far enough from the set temperature to call extra heating and cooling stages, the thermostat will wait the minimum SU = time value before bringing on extra stages. This delay provides time for the thermostat to determine whether additional stages are needed or if the current stages will bring the room to setpoint in a reasonable period of time. Adjustable in minutes 1 - 16, OFF.

DT = 20 UPSTAGE DELAY TIME

Time in minutes before next stage of heating or cooling is to be called.
Delay only operates if the stage trip temperature has not yet been reached.
Adjustable between OFF, 5 to 90 minutes in five minute steps.

OS = 0 OPTIMIZED START/STOP (ADAPTIVE RECOVERY) (SEE PAGE 48)

OS = 0: Optimized start/stop function OFF
OS = 1: Optimized start/stop function RUNNING

C2 = 0.0 CALIBRATION REMOTE SENSOR

Calibration Offset for the TT terminal temperature sensor
Adjustable range +/- 9°F degrees (4.5°C degrees).

CO = 45°F (7°C) COOLING OFF TEMPERATURE (SEE PAGE 48)

Only operates if TT = OA and outside temperature sensor is fitted.
Outside air temperature below this value will force the cooling function OFF.
Adjustable between 41 to 122°F in steps of 1.0 degree.
Adjustable between 5 to 50°C in steps of 0.5 degree.

HO = 90°F (32°C) HEATING OFF TEMPERATURE - (SEE PAGE 48 FOR MORE DETAIL)

Only operates if TT=OA and outside temperature sensor is fitted.
Outside air temperature above this value will force the heating function OFF.
Adjustable between 41 to 122°F (5 to 50°C).

HB = 95°F (35°C) HIGH BALANCE POINT (SEE PAGE 47)

TT = OA: The outside temperature sensor must be fitted and Sw 1 = OFF. 2nd (or 3rd) stage heating is locked out when the outside air is above this temperature. Adjustable between 41 to 122°F (5 to 50°C).

LB = 40°F (4°C) LOW BALANCE POINT (SEE PAGE 48)

TT = OA: The outside temperature sensor fitted, H3 = EH, Sw 1 = OFF and Sw2 = ON. Outside temperatures below this value will automatically select Emergency Heat mode. Adjustable between 15 to 77°F (-9.5 to 25°C).

FT = OFF FILTER WARNING TIME

Return air filter cleaning warning time. Adjustable between OFF and 900 hours in steps of 100 hours.

AD = 07 MODBUS ADDRESS (SEE PAGE 44)

ModBus communications address 1 to 99

BD = 19.2 MODBUS BAUD RATE

BD = 4.8: ModBus baud rate is 4,800 Baud
BD = 9.6: ModBus baud rate is 9,600 Baud
BD = 19.2: ModBus baud rate is 19,200 Baud

CD = 0 COMMISSIONING MODE (SEE PAGE 20)

CD = 0: Commissioning mode is OFF
CD = 1: All time delays are OFF or reduced to a very small value

PA = 0 SETS COMMUNICATION PARITY FOR MODBUS COMMUNICATIONS

PA = 0: None set
PA = 1: Even parity
PA = 2: Odd parity

SS = 0 START STOP MODE OVERRIDE (TYPICALLY USED BY MODBUS MASTER)

SS = 0: User Start Stop program in use
SS = 1: Thermostat held in Start program typically via call from ModBus master
SS = 2: Thermostat held in Stop program typically via call from ModBus master

OF = 0 OVERRIDE FUNCTION

OF = 0: The thermostat will control its own relays (Default)

OF = 1: The five thermostat relays are being controlled via a ModBus master only. No thermostat buttons will function and all programming and control information is suppressed. The word Override will flash during this mode. The thermostat will automatically exit this mode if no valid ModBus signals have been received for five minutes.

RS = 40 THERMOSTAT SENSOR RESPONSE TIME TO ROOM TEMPERATURE CHANGES

Adjustable from RS = 10 (very fast) to RS = 90 (very slow). Default is RS = 40

TS = 0 FACTORY TEST MODE (SEE PAGE 47)

TS = 0: Factory test Mode OFF

TS = 1: Display configuration code*

TS = 2: Step cycle all relays in sequence, 1 2 3 4 5 etc

TS = 3: Reset software to factory default. Press Fan button to initiate

* This table is available from the download section at www.robertshaw.com.

REMOTE TEMPERATURE SENSOR DIP SWITCH POSITIONS

ON = RT1: Single sensor

OFF = RT1 and RT2: At least two sensors for averaging

When the DIP switch is in ON position, thermistor reflects 10KΩ resistance for single sensor applications. When the DIP switch is in OFF position, a minimum of two sensors are required to average the temperature.

USING REMOTE TEMPERATURE SENSORS

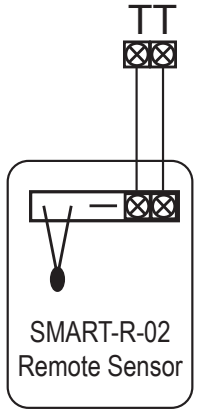

Figure 15 Sensor with DIP Sw ON

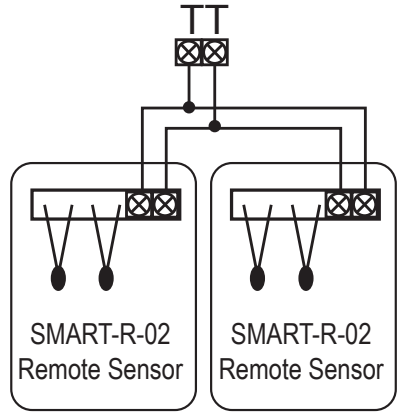

Figure 16 Averaging Sensors with DIP Sw OFF

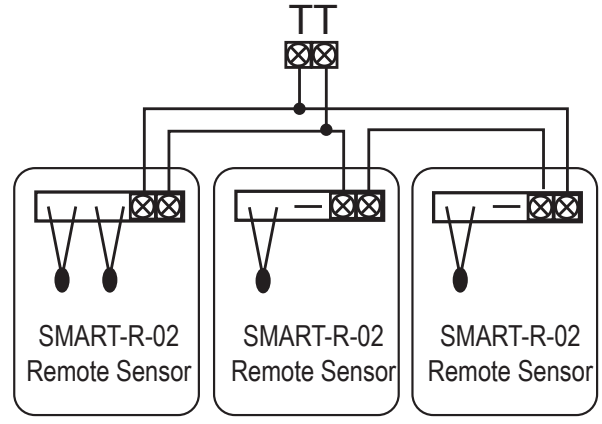

Figure 17 Averaging Sensors with DIP Sw OFF

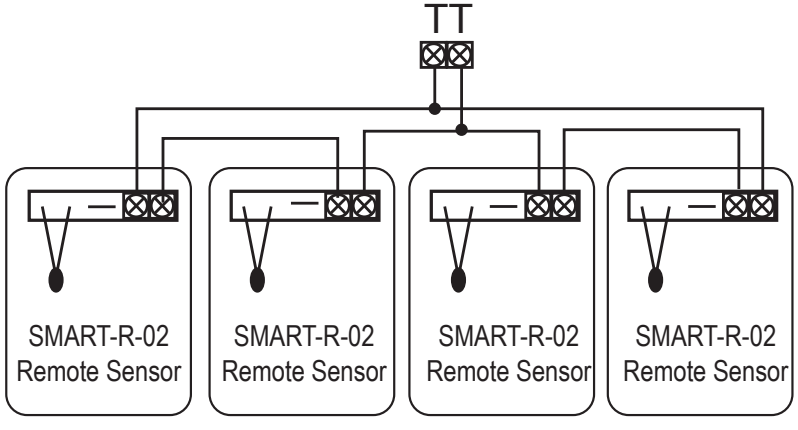

Figure 18 Four Averaging Sensors

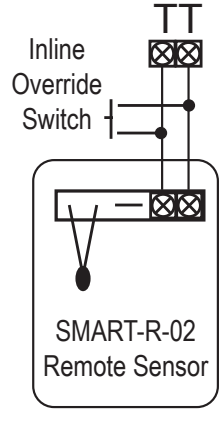

Figure 19 Sensor with Inline Switch

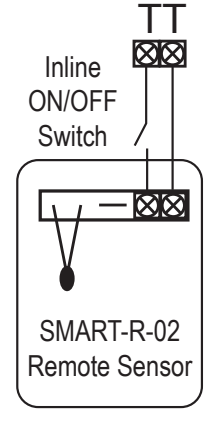

Figure 20 Sensor with ON/OFF Switch

The SMART 2000 has the capabilities to be a fully programmable networking thermostat. If Remote Sensor and ModBus Communication are NOT being used, skip over Using Remote Temperature Sensors and Advanced Functions. Proceed to the section Power Up The System.

The thermostat has a set of terminals marked TT. Wires connected to these two terminals are not polarity dependent and normally do not require shielded cable.

Single or multiple room air temperature sensors can be connected to the thermostat TT terminals if temperature averaging over a larger area is desired. Four examples are shown of commonly used sensor configurations in Figure 15 through Figure 18.

NOTE: Either TT = RS (remote sensor) or TT = AV (averaging sensors) value must be set in the Advanced Installer Menu for these sensors to be used.

Please note the configuration of SMART-R-02 sensor in the examples provided in Figure 17. Other sensor configurations are also available.

A typical maximum of 131 feet (40 m) is permitted for sensor runs with unshielded cable. If longer distances are required, a larger diameter 0.12" (0.3 mm) shielded cable should be used.

The SMART 2000 auto detects sensors connected to the TT terminals. Temperature sensors can also be switched ON and OFF as required by placing a switch in the sensor wiring to open the circuit the sensor loop. See Figure 19.

When used in Start / Stop Commercial Programmable Mode (Sw6 = ON, Sw8 = OFF), the after hours run timer can be toggled ON or OFF as required with a momentary press of a button on the remote sensor. See Figure 20.

Outside Air Sensor Wiring

Set TT = OA in the Advanced Installer Menu

The SMART 2000 can display the outside air temperature if desired. Some advanced control functions such as high and low balance points rely on this sensor for correct operation. Using a single pair of wires, connect the TT terminals in the thermostat to the two terminals in the outside air temperature sensor. See Figure 21. If the outside air sensor fails, two dashes will be shown on the LCD where the outside air temperature would normally be displayed to alert you of the problem.

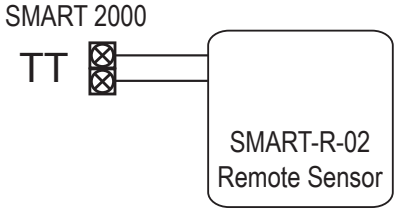

Figure 21

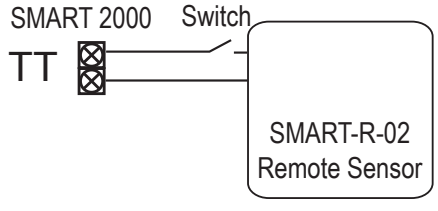

Figure 22

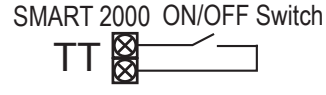

Figure 23

Remote Air Temperature Sensor Wiring

Set TT= RS in the Advanced Installer menu (Default)

When you wish to measure the temperature from a location distant from the wall controller, connect a remote temperature sensor to the TT terminals in the SMART 2000. This will automatically disable the sensor fitted to the wall controller and use the remote temperature sensor(s) to control the room temperature. See Figure 21. Should you wish, you can switch the remote temperature sensor ON and OFF, switching temperature sensing locations between the remote temperature sensor and the thermostat temperature sensor when required. Fit an inline switch in the sensor wiring or order SMART-R-02 sensor. See Figure 22.

Averaging Temperature Sensors

Set TT = AV in the Advanced Installer Menu

The SMART 2000 can average the sensed temperature equally between the remote temperature sensor(s) and the one fitted to the thermostat if required. See Figure 21 for details on wiring the sensor. The thermostat will auto-detect this sensor and automatically average the two sensors values to control the room temperature.

Remote ON / OFF Functions

Set TT = OF in the Advanced Installer Menu

The SMART 2000 can be connected to an external dry contact, when this contact is closed the thermostat will turn OFF. See Figure 23. When the thermostat has been switched OFF by the TT terminals the word OFF will flash in the LCD to indicate that this has been the shutdown method. The thermostat will return to the user settings when this switch is OPEN.

Using the Occupancy Mode

Set TT = OC in the Advanced Installer Menu

The SMART 2000 can alternate between the user preferred setpoints and an installer preprogrammed setpoint when required. Simply wire a remote switch to the thermostat TT terminals. See Figure 23. When the switch is OPEN, the user settings will control the room temperature, when the switch is CLOSED the Installer OC (Occupied Cooling value) and OH (Occupied Heating value) settings will be used to control the room temperature.

Supply Air Temperature Monitoring

Set TT = DA in the Advanced Installer Menu

In this mode, the SMART 2000 will broadcast this sensor temperature value to ModBus ONLY. This value is not used by the thermostat nor is it displayed on the LCD. It is expected that this information is used for supervisory functions or equipment control feedback. Also, as this is an analog input, by monitoring a switched resistor network your supervisory software can decode a number of digital states.

ADVANCED FUNCTIONS

ModBus Communications

The SMART 2000 has integrated ModBus communications capabilities where, a remote PC or building Direct Digital Control (DDC) system may view or adjust many of the thermostat functions remotely.

It is not the scope of this manual to provide detail on the communication capability of the SMART 2000. ModBus communications detail is available for download from the download page at www.robertshaw.com.

The communications port of the SMART 2000 has two terminals marked A and B. See Figure 24. Terminals A+ and B- are used for communication.

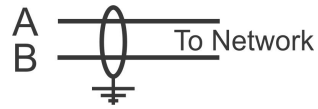

Figure 24

A maximum of 32 SMART 2000 thermostats can be connected to any single hub. Each thermostat on the hub must have a unique network address (factory default is 7). These settings are adjustable from 1 to 99 in the Advanced Installer Menu.

A typical ModBus wiring example is shown in Figure 25. If using a common power supply to power all thermostats on a network, it is highly recommended that all power is wired in phase, i.e. R to R and C to C and NOT crossed.

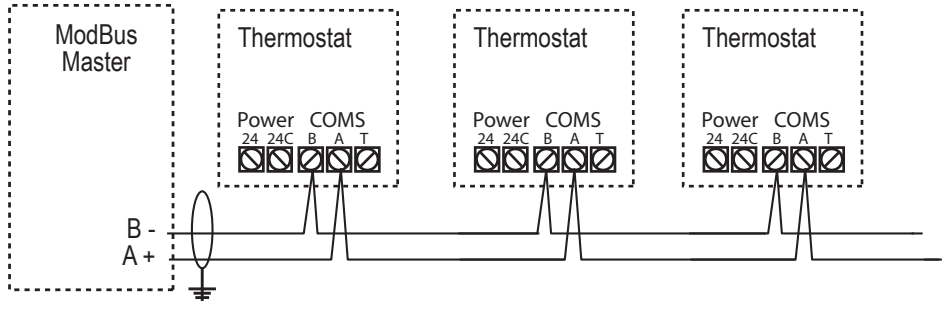

Figure 25

In many cases where multiple thermostats are used in a single network or on a long network run, the two place DIP switch located between the R and R/Com terminals on the thermostat circuit board should be switched ON to improve network reliability.

It is essential that the network be wired as a daisy chain as show in Figure 26. Figure 27 and Figure 28 show examples of how NOT to wire a ModBus network.

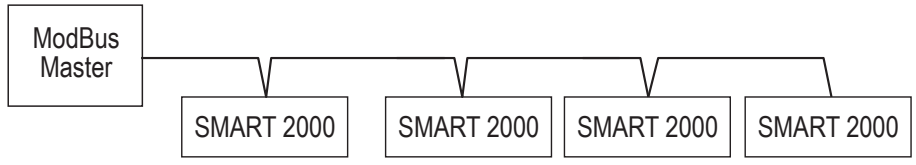

Figure 26 Correct Wiring

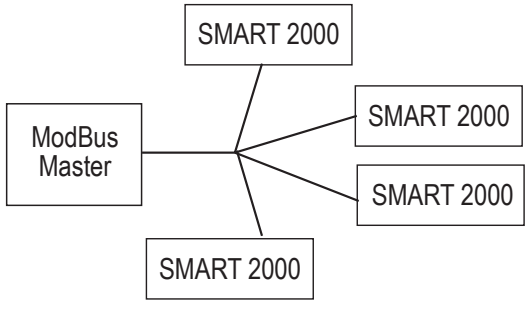

Figure 27 Incorrect Wiring

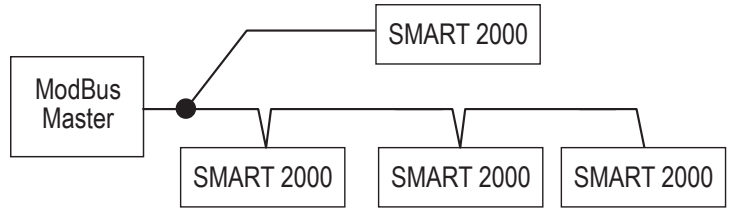

Figure 28 Incorrect Wiring

18 gauge (1 mm) twisted pair unshielded wire can be used for short communication runs.However, for longer runs or where electrial noise may be present, a shielded twisted pair should be used.

Factory Test Mode

The SMART 2000 is fitted with a simple factory Test Mode. In the Advanced Installer Menu, use function TS to test all relays, output functions and the current configuration of the thermostat settings.

TS = 0: Factory Test Function is OFF
TS = 1: Display DIP switch configuration code
TS = 2: Relay test mode. All relays cycle ON then OFF in an endless loop
TS = 3: Factory Software reset – Press Fan button to confirm

High and Low Balance Points

The SMART 2000 is fitted with both High and Low Balance Point control capability.

For these functions to operate the Advanced Installer setting must be TT = OA (outside air temperature sensor fitted), the outside air sensor must be installed and Sw1 must be OFF (single fan speed mode).

High Balance Point

Set the Advanced Installer Menu value HB = XX.

When the outside air temperature is above this value, second or third stages of heating are held off regardless of the room and set temperature.

Set this function to prevent the excessive consumption of energy when the outside air temperature is warm enough not to require additional heating stages to be used.

Low Balance Point

SW2 = ON, H3 = EH (Emergency Heat Mode) Set the Advanced Installer Menu value LB = XX.

When the outside air temperature is below this value, the thermostat will automatically switch to emergency heat mode when heating is required. If the outside temperature is above this LB = XX value, the emergency heat mode can be selected manually at anytime with the MODE button.

Setting Up the Heat and Cool OFF Functions

To conserve energy, the SMART 2000 can suspend the heating or cooling functions if the outside air temperature is within a prescribed set range.

If the outside air temperature is above the Advanced Installer setting HO = XX (heating OFF) value, heating will not be called regardless of the room and set temperature. If the outside air temperature is below the CO=XX value, cooling will not be called regardless of the room and set temperature. Heat or Cool and the word Locked will flash on the LCD to show that these modes have been restricted.

Adaptive Recovery

Only Available in Programmable Mode (Sw6 = ON). The adaptive recovery function of the thermostat permits the user to program a time that a desired set temperature is required, letting the thermostat calculate the most energy efficient time to turn ON to achieve the desired temperature at the selected time.

For example, if the user typically returns home at 5:00 pm, set program #3 (if used in residential programmable mode) to 5:00 pm. The thermostat will calculate the most energy efficient time, based on set and room temperatures as well as a history of temperature change, to turn ON the equipment prior to 5:00 pm. The desired set temperature will be reached by 5:00 pm. For example, when heating is required, the heating may start at 4:32 pm so the set temperature is reached at 5:00 pm.

Adaptive recovery may also prevent the thermostat from running for a few moments just prior to a program change occuring. RECO is shown in the LCD whenever Adaptive recovery is being used.

POWER UP THE SYSTEM

At this time:

- The thermostat should be mounted and wired.
- Any advanced communication modules should be wired to the thermostat terminals.
- Eight Sw DIP switches and the two advanced TT switches are set correctly.
- The Advanced Installer options have been reviewed and any changes are planned.

Turn ON the equipment and power the SMART 2000. When power is first applied, the thermostat will perform a test display that lights all the segments of the LCD. This is followed by the software version, then the running display.

Enter the Advanced Installer settings menus. If making changes proceed through the functions and make any changes that are required. Exit the settings and perform the following tests.

Test fan operation

With the thermostat OFF (press the MODE button to show OFF in the LCD), press the FAN button to cycle through the available fan speeds. As the LCD changes to show the fan speed or fan mode you should hear faint “clicks” as the thermostat internal relays change. The equipment fan speed should change accordingly.

Test heating and cooling (if both fitted)

Turn the SMART 2000 to Auto changeover mode by pressing the MODE button until the words HEAT and COOL are shown on the LCD.

Use the Temp ▲ or ▼ buttons to set the desired temperature a few degrees below the ambient temperature. After a few moments, you will hear a click and the word HEAT will change to HEATING. Verify that the heating system is ON and operating correctly. If stage 2 heat is being called for, the thermostat will display MODE. (with a period after the word MODE) to indicate 2nd stage heat. Stage 3 heat is indicated by MODE with a flashing period.

Use the Temp ▲ or ▼ buttons to set the desired temperature a few degrees above the ambient temperature. After a few moments, you will hear a click and the word COOL will change to COOLING. Verify that the cooling system is ON and operating correctly. If stage 2 cool is being called for, the thermostat will display MODE. (with a period after the word MODE) to indicate 2nd stage cool.

Press the MODE button to turn the thermostat OFF. After any necessary timers have expired, all heating, cooling and fan functions should stop. Verify that the system has shut down.

NOTE: Anti-cycle delay timer and other minimum delay timers may need a minimum of four minutes before activating heating or cooling equipment.

	In HP mode (Sw2 = ON) it is normal for the reversing valve to remain energized after the compressor has stopped. This is done to prevent “de-compression HISS” and to limit the wear on the reversing valve. It will de-energize to conserve power 30 minutes after the reversing valve was last used.

If commissioning mode has been used, it is important that the function be turned OFF before leaving the installation site.

Use the User Manual as a guide to set the real time clock and the preferred user program (if applicable). Explain the equipment and thermostat operation to the user.

Commissioning is complete.

SPECIFICATIONS

Input Voltage	24V AC 50/60 Hz +/- 15%
Relay Rating	24V AC @ 1 Amp maximum per relay
Operating Temperature	32 to 122°F (0 to 50°C)
Operating RH	0 - 95% (non condensing)
Storage Temperature	32 to 150°F (0 to 65°C)
Size	4.5" x 4" x 1" (113 x 103 x 23 mm)
Display Size	2.9" x 2.2" (74 x 55 mm)
Temperature Sensor(s)	NTC type 3 - 10KΩ in ON position/20KΩ in OFF position
Accuracy in ON position	+/- 3 °F degrees @ 77°F (+/- 0.3 °C degrees @ 25°C)
Accuracy in OFF position	+/- 3 °F degrees @ 34°F (+/- 0.3 °C degrees @ 1°C)
Stage Delays	Minimum temperature change over time method
Timed Upstage Delay	5 - 90 minutes
Anti-Cycle Delay	Off to 4 minutes
Maximum Hourly Cycles	Unlimited, 30, 10 or 6 (Installer set)
Display Resolution	1 °F degree (0.5 °C degrees)
Control Range	OFF to 100°F (38°C)
Outside Air Temp Display Range	17 to 140°F (-8 to +60°C)
Backlight	Blue
Backlight Life	3,000 hours to half brightness

SPECIFICATIONS

Adaptive Recovery Method	Time to start vs temp differential method - updating
Communications Protocol	ModBus – contact Robertshaw for objects list
Fan Speeds	Based on difference between room and set temp
Approvals	FCC (Part 15) (pending), C-tick
Warranty	1 year RTB

Table 2 Sensor Reference Table

KΩ	24.3	22.0	20.0	18.1	16.2	14.3	13.7	12.5	11.4	10.4 (Default)	10.0	9.57	8.75	8.05
^{o}C	6	8	10	12	14	16	18	20	22	24	25	26	28	30
^{o}F	42.8	46.4	50	53.6	57.2	60.8	64.4	68	71.6	75.2	77	78.8	82.4	86

TROUBLESHOOTING

Symptom	Problem	Solution
Temperature display seems inaccurate.	Air from the wall cavity may be leaking into the rear of the thermostat / sensor enclosure.	Plug holes in wall with tape to prevent leaks.
	The internally fitted temperature sensor is folded back inside the thermostat and not being exposed to the room air temperature.	Carefully move the room temperature sensor bead so that it is just behind the sensor opening in the case.
	External heat or cool source such as lamps, televisions or drafts from open doors affecting the accuracy of sensor.	Move lamps, vents or other sources of abnormal temperature away from sensors.
	Sensor calibration setting is incorrect.	Adjust C1 = XX value in Advanced Installer Mode to correct perceived sensor inaccuracy. See page 26.

Symptom	Problem	Solution
“Locked” appears on LCD and heating or cooling will not operate.	This is not a fault. Outside air temp too high to require heating. Outside air temp too low to require cooling.	The HO = XX and/or CO = XX value is inhibiting heating or cooling calls. Change these values in the Advanced Installer Menu. See page 34.
Heating or cooling runs in deadband.	Thermostat incorrectly set to HP mode. Thermostat keeps reversing valve energized after heating / cooling has stopped to limit decompression noise from AC system.	Set Sw2 = OFF and retest heating and cooling operation.
	Minimum run period has not yet expired. HEATING or COOLING flashes in the LCD.	Sw7 sets minimum run period to two or six minutes.
	Compressor and reversing valve wiring crossed in HP mode (Sw2 = ON).	Check W1 and Y1, Y2 for correct connections.
Thermostat has no display.	Power failure or faulty thermostat.	Check for 24V AC on the 24 and 24T terminals. Check output from transformer.

Symptom	Problem	Solution
Reversing valve remains energized after heating or cooling has stopped.	This is not a fault.	The reversing valve remains energized after the heating/ cooling has stopped to limit decompression hiss. Reversing valve will de-energize within two hours of the last call.
Wrench Symbol flashes on LCD.	This is not a fault. Commissioning mode enabled.	Exit commissioning mode before hand over to user. See page 20.
E.Heat or E.Heating is shown on LCD without manually selecting it.	This is not a fault.	LBP reached, outside air too cold for reliable HP operation. Set LBP with the LB = XX value in the Advanced Installer Menu. See page 35.
The word OFF is flashing in the LCD. MODE button has no effect.	This is not a fault.	TT = OF in Advanced Installer Menu.

Symptom	Problem	Solution
Some buttons do not appear to operate. Padlock is show on LCD.	Keyboard lock is ON.	LC = XX value in Advanced Installer Menu set the lock values, see page 25.
Cannot enter heat or cool modes.	Thermostat set for Heating or cooling only modes.	Heating or cooling mode not available on your system.
Cannot set heating and cooling to desired value. Padlock symbol flashes.	This is not a fault.	HL = XX (heating setpoint limit) and CL = XX (cooling setpoint limit) restrict control range. See page 26.
Outside Air Temperature display is showing dashes.	Outside air temperature air sensor has failed. No outside air sensor fitted.	Check wiring and outside air sensor. Replace outside air sensor. Change TT = AO to TT = RS in Advanced Installer Menu.
HEAT or COOL is flashing in the LCD. Heating or cooling has not started.	This is not a fault. Heating or cooling will start shortly.	Anti-cycle delay in progress. This can be disabled if required for commissioning. See page 20.

Symptom	Problem	Solution
The Fan runs on for some time after the heating or cooling stops, even when I turn the thermostat OFF.	This is not a fault.	The fan purge mode is set. FP = XX value.
Thermostat displays wrong mode (F or C).	The thermostat can operate in both Deg F and Deg C mode as set in Advanced Installer Menu.	See page 26 for changing the CF = XX value.
Cannot select multiple fan speeds.	Thermostat is set for single fan speed Sw1 = OFF.	Turn Sw1 to ON. NOTE: Three fan speed mode can only be used on single stage systems.

ONE YEAR LIMITED WARRANTY

Robertshaw warrants to the original contract installer, or to the original consumer user, that each new Robertshaw thermostat will be free of defects in materials and workmanship under normal use and service for a period of one (1) year from the date of purchase (the "Warranty Period"). If any Product fails within the applicable Warranty Period, Robertshaw shall, at its option, repair or replace the Product or credit the purchase price, provided the Product is returned to Robertshaw's facility or designated agent with transportation charges prepaid, and the Product, upon examination by Robertshaw, is found not to conform to the Warranty. Cost of Product removal, labor, or reinstallation of new Product are not covered under this Warranty and are not the responsibility of Robertshaw. Warranty on Products, parts, components and/or software sold, but not manufactured by Robertshaw, shall be expressly limited to the warranty terms of the manufacturer of such products, components, parts and/or software.

This above warranty does not apply to: (i) batteries; (ii) any losses or damages due to misuse, use of the Products in other than their normal and customer manner, accident, abuse, water, fire, neglect, normal wear and tear, negligence (other than Robertshaw's), unauthorized modification or alteration, use beyond rated capacity, unsuitable power sources or environmental conditions, stripped threads, improper installation, repair, handling, maintenance or application or any other cause not the fault of Robertshaw.

THE FOREGOING WARRANTY IS IN LIEU OF AND EXCLUDES ALL OTHER WARRANTIES, WHETHER EXPRESS OR IMPLIED, INCLUDING THE IMPLIED WARRANTIES OF MERCHANTABILITY, TITLE AND FITNESS FOR A PARTICULAR PURPOSE. IN NO EVENT SHALL ROBERTSHAW BE LIABLE TO CONSUMER, CONTRACTOR, OR ANY THIRD PARTY FOR ANY SPECIAL, INDIRECT, INCIDENTAL, CONSEQUENTIAL OR PUNITIVE DAMAGES INCLUDING, WITHOUT LIMITATION, LOSS OF USE, LOSS OF PRODUCTION, LOSS OF GOODWILL, LOSS OF CONTRACTS, LOSS OF ANTICIPATED SAVINGS, LOST REVENUES OR PROFITS, OR PROPERTY DAMAGE, REGARDLESS OF WHETHER SUCH LOSS OR DAMAGE IS BASED IN CONTRACT, WARRANTY,

TORT, NEGLIGENCE, STRICT LIABILITY, INDEMNITY, PRODUCT LIABILITY, OR OTHERWISE, AND EVEN IF ROBERTSHAW HAS BEEN ADVISED OF THE POSSIBILITY OF SUCH DAMAGES.

REPAIR, REPLACEMENT OR CREDIT OF THE PURCHASE PRICE SHALL CONSTITUTE THE SOLE REMEDIES WITH RESPECT TO DEFECTS IN THE PRODUCTS. THE CONSUMER ASSUMES ALL RISKS AND LIABILITY FOR INCIDENTAL AND CONSEQUENTIAL DAMAGE RESULTING FROM INSTALLATION AND USE OF THE THERMOSTAT.

Some states does not allow the exclusion or limitation of incidental or consequential damages, or allow limitations on how long an implied warranty lasts, so the above limitations or exclusions may not apply to you. This Warranty gives you specific legal rights, and you may also have other rights which vary from state to state.

Return for Warranty Consideration

1. All Products to be considered for warranty must be returned to Company with shipping charges prepaid.
2. Product returned to Company must be packaged in such a manner that will prevent any further damage to the Product during transit. The Warranty terms above shall not apply to any items damaged in transit.
3. An itemized packing slip, including owner's name and address, is required for each shipment to Company of Product(s) to be considered for warranty. The packing slip must contain reason for warranty return, date of installation, date of failure, and a contact name in case further information is required.
4. Within North America (USA and Canada), all cartons must be clearly identified as WARRANTY PRODUCT and returned to:
   USA Distributors: Warranty Department Robertshaw 1921 Anei Circle, Brownsville, TX 78521 USA
   Canada Distributors: Warranty Department Robertshaw 4060 Ridgeway Drive, Unit 14 Mississauga, ON L5L5X9 CANADA

Robertshaw®, Uni-Line® and SmartSense™ are trademarks of Robertshaw, its subsidiaries and/or affiliated companies. All other brands mentioned may be the trademarks of their respective owners.

Customer Service Telephone 1.800.304.6563
Customer Service Facsimile 1.800.426.0804
HVACCustomerService@robertshaw.com

For Technical Service
Telephone 1.800.445.8299
Facsimile 1.630.260.7294
TechnicalService@robertshaw.com

www.uni-line.com
www.robertshaw.com
©2015 Robertshaw

2/15 – 352-00193-001