REZNOR®

Replacement Parts

Applies to: **Model UEAS, High-Efficiency, Low-Static Unit Heater**

IMPORTANT

1. **Always include complete heater model and serial number so that any specification change can be considered for parts replacement. It can save time and expense.**
2. **In keeping with our policy of continuous product improvement, we reserve the right to alter any information shown here. Specifications are subject to change without notice.**
3. **We reserve the right to substitute functional replacements**
4. **Order by P/N; not Heater Option Designation.**

Index

B
Burner and Components 5

C
Cabinet Parts 7
Capacitor 3
Combustion Air Inlet 6
Concentric Adapter Box 6

D
Date of Manufacture 2
Disconnect Switch 3
Door Assembly 7
Door Switch 3
DSI Integrated Control Module 3

E
Electrical Components - Location 3
Electrode 5

F
Fan and Motor Components 5
Fan Blade 5
Fan Guard 5
Flue Wrapper 4

G
Collection Box Gasket 6
Header Gaskets 6
Bird Guard 6

H
Hanger Kit 7
Primary Heat Exchanger Assembly 6
Secondary Heat Exchanger Assembly 6
High Temperature Limit Switch 3

K
Horizontal Vent/Combustion Air Terminal Kit 6
Vertical Vent/Combustion Air Kit 6

L
High Temperature Limit Control 3
Vent Temperature Limit Switch 3
Logo 7
Louvers 7
Vertical Louvers 8

M
Fan Motor 5

N
Downturn Nozzles 8

O
Orifice 5
Orifice Adapter 5

P
Paint 7
Panels 7
Pressure Switch 3
4" PVC Cap 6

R
Rain Collar 6
Rating Plate 2
Time Delay Relay 3
Ring Guard 6

S
Bird Screen 6
Silicone Sealing Ring 6
Flame Sensor 5
Serial No. 2
Shaft Protector 4
Spacers 6
Swivel Connector 7

T
Thermostat 8
Top Panel 7
Transformer 3

V
Manual Shutoff Valve 5
Natural Gas Valve 5
Vent / Combustion Air Component 6
Venter Components 4
Venter Housing 4
Venter Motor and Wheel Assembly 4
Vent Temperature Limit Switch 3

W
Blower Wheel and Housing 4
Wiring Harness 3

References

Printed Forms	Form	P/N
Installation/Operation/Maintenance Manual	I-UEAS	221232

Website: **www.RezorHVAC.com** (Downloadable files of all printed forms are on the Website)

Rating Plate and Serial No.

Serial No. Decoding

Serial No. Sample: **BLK 79 6E N 00000**
Elements of No.: **1 | 2 | 3 |4| 5**

Key: **1 = Date of Manufacture Code (See table below.)**
2 = Ignition Code (See Form P-Valves.)
3 = Valve Code (See Form P-Valves.)
4 = Type of Gas (N = Natural; L = Propane)
5 = Consecutive number

Prefix to Serial No. **Prefix Key: E = E3 (409) Stainless Steel Heat Exchanger**

Serial No. Date of Manufacture

Year	Jan	Feb	Mar	Apr	May	June	July	Aug	Sept	Oct	Nov	Dec
2007	BGA	BGB	BGC	BGD	BGE	BGF	BGG	BGH	BGI	BGJ	BGK	BGL
2008	BHA	BHB	BHC	BHD	BHE	BHF	BHG	BHH	BHI	BHJ	BHK	BHL
2009	BIA	BIB	BIC	BID	BIE	BIF	BIG	BIH	BII	BIJ	BIK	BIL
2010	BJA	BJB	BJC	BJD	BJE	BJF	BJG	BJH	BJI	BJJ	BJK	BJL
2011	BKA	BKB	BKC	BKD	BKE	BKF	BKG	BKH	BKI	BKJ	BKK	BKL
2012	BLA	BLB	BLC	BLD	BLE	BLF	BLG	BLH	BLI	BLJ	BLK	BLL
2013	BMA	BMB	BMC	BMD	BME	BMF	BMG	BMH	BMI	BMJ	BMK	BML
2014	BNA	BNB	BNC	BND	BNE	BNF	BNG	BNH	BNI	BNJ	BNK	BNL
2015	BOA	BOB	BOC	BOD	BOE	BOF	BOG	BOH	BOI	BOJ	BOK	BOL
2016	BPA	BPB	BPC	BPD	BPE	BPF	BPG	BPH	BPI	BPJ	BPK	BPL
2017	BQA	BQB	BQC	BQD	BQE	BQF	BQG	BQH	BQI	BQJ	BQK	BQL
2018	BRA	BRB	BRC	BRD	BRE	BRF	BRG	BRH	BRI	BRJ	BRK	BRL
2019	BSA	BSB	BSC	BSD	BSE	BSF	BSG	BSH	BSI	BSJ	BSK	BSL
2020	BTA	BTB	BTC	BTD	BTE	BTF	BTG	BTH	BTI	BTJ	BTK	BTL

Sample of Model UEAS Rating Plate

REZNOR

MERCER, PA. USA 16137

MADE IN MEXICO

SEPARATED COMBUSTION SYSTEM UNIT HEATER

CATEGORY IV

ANSI Z83.8 CSA 2.6 UNIT HEATER

MODEL [B] **[C]**

SERIAL NO.

[D] VOLTS [D] PH [D] HZ MAXIMUM TOTAL INPUT [D] AMPS

TYPE OF GAS: [E]

FOR USE AT 0-2000 FEET, 0-610 METERS OF ALTITUDE.

ORIFICE SIZE [F] DRILL

	SEA LEVEL
NORMAL INPUT	[J] BTU/HR
THERMAL OUTPUT CAPACITY	[L] BTU/HR
MINIMUM INPUT	[M] BTU/HR
NORMAL MANIFOLD PRESSURE	[G] IN.W.C.
MIN. PERMISSIBLE GAS SUPPLY PRESSURE FOR PURPOSE OF INPUT ADJUSTMENT.	[H] IN.W.C.

CLEARANCES TO COMBUSTIBLE CONSTRUCTION: TOP-4", FLUE CONNECTION-0", CONTROL SIDE-18", OPP. SIDE-2", BOTTOM-1", FRONT-36"
FOR ALTERNATE INSTALLATIONS USE THE LATEST EDITIONS OF THE APPROPRIATE STANDARD LISTED BELOW:

FOR AIRCRAFT HANGARS	USE STANDARD ANSI/NFPA 409
FOR PARKING STRUCTURES	USE STANDARD ANSI/NFPA 88A
FOR REPAIR GARAGES	USE STANDARD ANSI/NFPA 88B

THIS UNIT IS NOT FOR USE WITH DUCTS.
THIS UNIT IS NOT FOR USE WITH FILTERS.
CONSTRUCTION WALL THICKNESS FOR PURPOSE OF VENTING: 1" MIN., 48" MAX.
In the event the vent temperature limit switch causes the heater to shut off. Determine and correct the cause. Failure to do so could result in personal injury or death. To reset, depress the button on the sensor located on the side of the venter housing.

Rating Plate Key:
- **B = Model No.**
- **C = Date of Manufacture (Month & Year)**
- **D = Volts; Phase; Hertz; Input Amps**
- **E = Fuel Type (natural gas or propane)**
- **F = Orifice Size**
- **G = Normal Manifold Pressure (inches w.c.)**
- **H = Minimum Gas Supply Pressure (inches w.c.)**
- **J = Normal BTUH Input (sea level)**
- **L = Thermal Output BTUH (sea level)**
- **M = Minimum BTUH Input (sea level)**

Electrical Components - Locations and P/N's

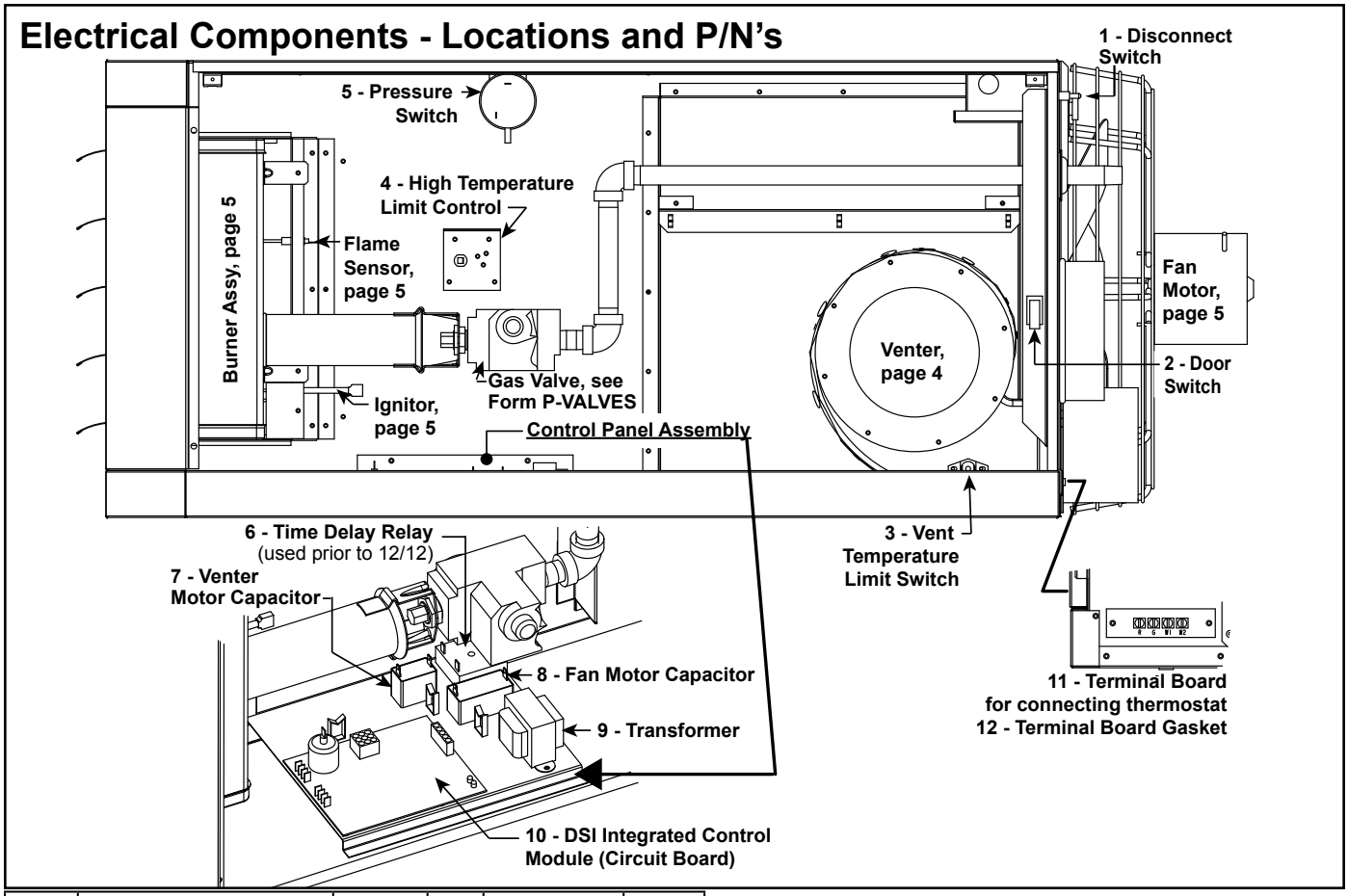

CODE	Description	130	180	260	310
1	Disconnect Switch	**101902**			
2	Door Switch	**217262**			
3	Vent Temperature Limit Switch	**221158**, Opens 145°F, manual reset			
4	High Temperature Limit Switch	**45602**, 180°		**85449**, 200°, Yellow	**45602**, 180°
5	Pressure Switch (0 to 6,000 ft Altitude)	**221251**, Yellow	**221228**, Blue		
	Pressure Switch (6,001 to 10,000 ft Altitude)	**235954**, Green	**235953**, Orange		
6	Time Delay Relay (**NOTE**: Time delay relay is not used with DSI board P/N 269867, Serial No. Ignition Code A1 - See CODE 10 below and Serial No. Codes on page 2.)	**221388**			
7	Venter Motor Capacitor	**195643**			
8	Fan Motor Capacitor	**195643**			
9	Transformer	**175265**			
10	DSI Integrated Control Module - Circuit Board (Select by Serial No. Ignition Code)	**195265** (Serial No. Ignition Code 79 - see page 2)			
		269867 (Serial No. Ignition Code A1- see page 2)			
11	Wiring Harness	**234021**			

CODE 1 - On/Off Disconnect Switch, P/N 101902

CODE 2 - Safety Door Switch, Carling #TA22B-TLB-B, P/N 217262

CODE 3 - Vent Temperature Limit Switch, Thermodisc 36T26 73DD, P/N 221158

CODE 4 - High Temperature Limit Switch, See P/N by Size

CODE 5 - Pressure Switch, Honeywell, See P/N by Size

CODE 6 - Time Delay Relay, Airotronics, 24VAC, P/N 221388

See NOTE in list above.

CODES 7 & 8 - Capacitor, 7.5mfd, 400VAC, P/N 195643

CODE 9 - Transformer, 120/24 volts, P/N 175265

CODE 10 - DSI Control Module, P/N 195265, Serial No. Code 79 or P/N 269867, Serial No. Code A1

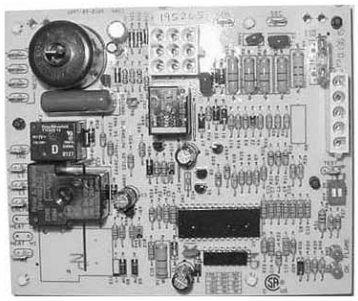

Flue Wrapper and Venter Components

CODE	Description	130	180	260	310
20	Flue Wrapper Side Gaskets	(2) 221198		(2) 221199	
21	Flue Wrapper Top/Bottom Gaskets	(2) 221200			
22	Flue Wrapper	220823		220824	
23	Venter Housing Gasket	221164			
24	Venter Housing Assembly (includes CODE 24A and CODE 3, Vent Temperature Limit	221520			
24A	Static Pressure Tap	116043			
25	Venter Motor and Wheel Assembly	222648	221240		
25A	Venter Motor, A.O. Smith F48Y67A13	221159			
25B	Flat Washer	(4) 204323			
25C	Motor Plate	221162			
25D	Motor Plate Gasket	221163			
25E	Slinger (smooth side must be flush against the motor plate)	221861			
25F	Venter Wheel	221172			
25G	Venter Wheel Housing	221173			
25H	Shaft Protector Gasket	221161			
25J	Shaft Protector	221160			
25K	Setscrew	222077			

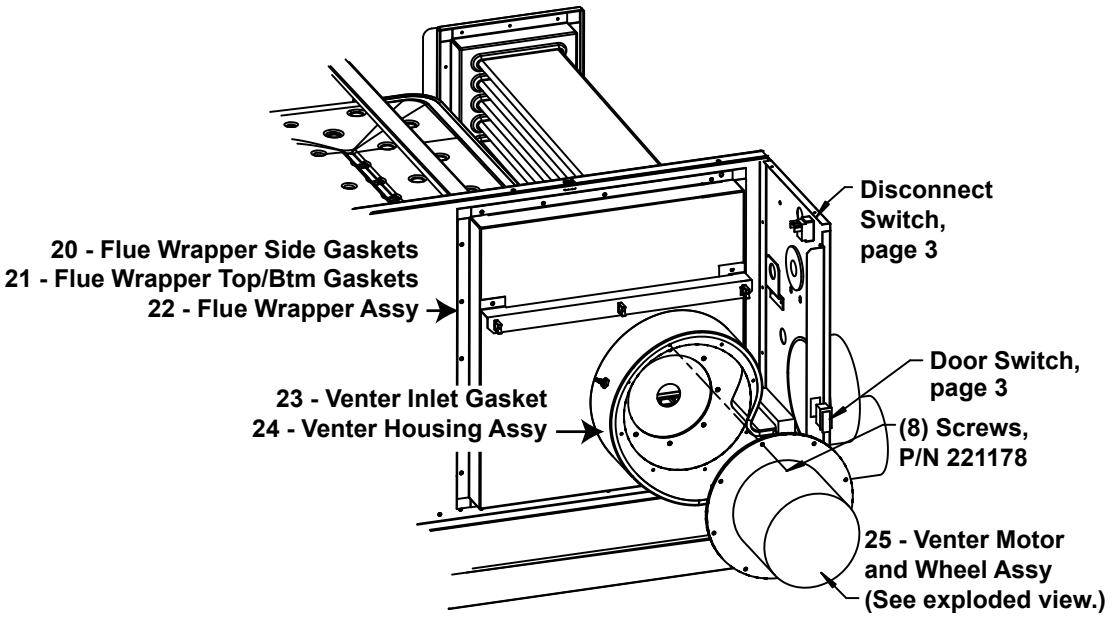

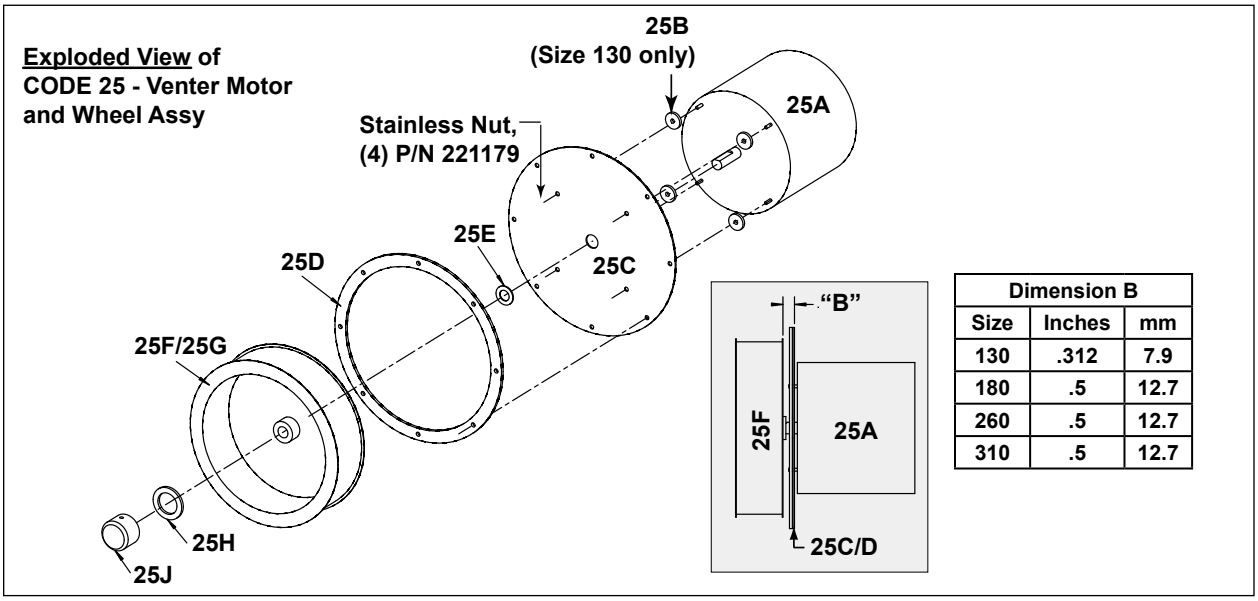

Dimension B		
Size	Inches	mm
130	.312	7.9
180	.5	12.7
260	.5	12.7
310	.5	12.7

Fan and Motor Components

CODE	Description		130	180	260	310
30	Fan Motor	115V	196246		196247	
		115V, AL14 (enclosed)	196824		196825	
31	Fan Blade (Setscrew torque 130±10 in/lbs)		195680		195683	209121
32	Fan Guard		170084		170086	
33	Isolator		(4) 196348			
34	Motor Spacer		N/A		204321	
35	Flat Washer		(4) 204323			
36	Nut		(4) 216942			

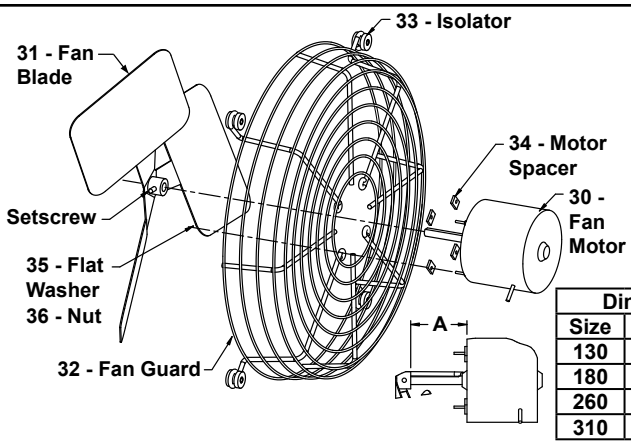

Dimension A		
Size	inches	mm
130	2-3/8	60
180	2-3/8	60
260	2	51
310	1-3/8	35

Burner and Components and Conversion Kits

CODE	Description		130	180	260	310
38	DSI Electrode		175272			
39	Flame Sensor		195292			
40	Burner Inlet Plate		221165	221166	221167	221168
41	Burner Body Assembly		221476	195238	195241	195243
42	Burner Shield Assembly		195528	195529	195532	195534
43	Burner Supports		(4) 196598			
44	Burner Baffle		(2) 197238			N/A
45	Natural Gas Orifice	P/N	211851	221263	196894	221264
		Marking	#3	6.2MM	7.6MM	0
	Propane Orifice	P/N	120415	221265	196902	196903
		Marking	3.3MM	25	14	8
46	Orifice Adapter		165701		194809	
47	Pipe Nut, 1/2"		165702			
48	Natural Gas Valve		260603		196981	
49	Natural to Propane Conversion Kit	Select Kit by Size & Valve Code - See page 2.				
		Valve Code	Y2 or Z7		Y3 or Z8	
		Kit P/N	221442	221443	221444	221445
		Valve Code	6E			
		Kit P/N	261647	261648		

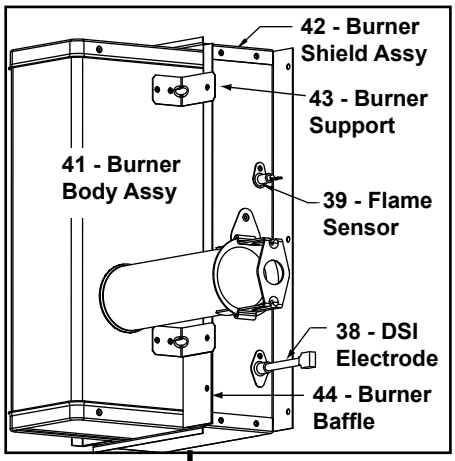

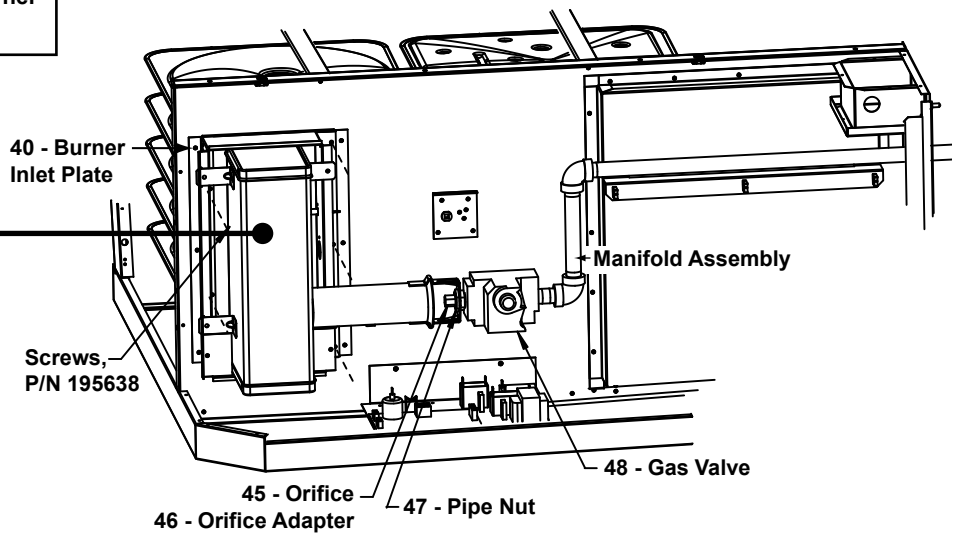

CODE 50 - Manual Shutoff Valve (Same as Option CE1)

Size	130, 180	260, 310
Option Pkg	15971	15972
Manual Shutoff Valve	196910, 1/2"	196911, 3/4"
Union	1224, 1/2"	1101, 3/4"

Replacement Heat Exchangers

CODE	Description		130	180	260	310
51	Primary Heat Exchanger Assembly	Aluminized	221252	221253	221254	221255
		409 Stainless	221318	221319	221320	221321
51A	Top/Bottom Header Gaskets		(2) 221201		(2) 221202	
51B	Side Header Gaskets		(2) 221203		(2) 221204	
52	Secondary Heat Exchanger Assembly		221256	221257	221258	221259
52A	Secondary Heat Exchanger Header Gasket		220804		220805	
52B	Collection Box Gasket		221187			

CODE 51 - Primary Heat Exchanger

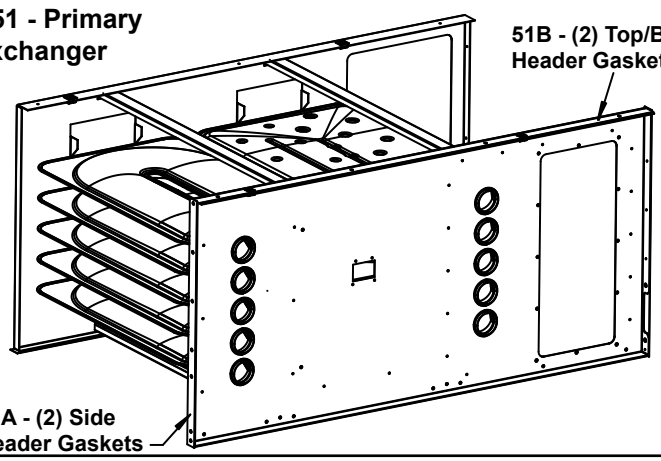

CODE 52 - Secondary Heat Exchanger

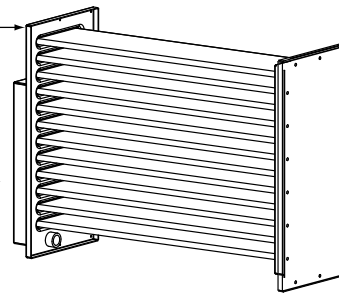

Vent / Combustion Air Components for Separated Combustion

CODE 55A and 56A - Concentric Adapter Box

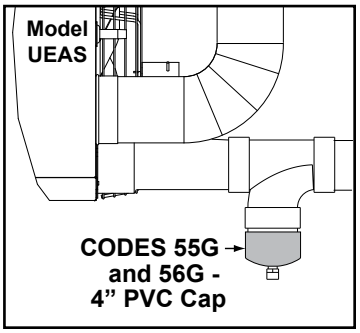

CODE 55 - Complete Horizontal Vent/Combustion Air Terminal Kit (Same as Option CC6), P/N 221247

CODE	Qty	P/N	Description
55A/B	1	221069	Concentric Adapter Box with Silicone Sealing Ring (above)
55C	1	221089	Bird Screen for Exhaust Outlet
55D	1	124940	Ring Guard for Air Inlet
55E	4	37661	#10-16x1/2" lg Screws to attach the inlet air guard
55F	4	221186	Spacers for inlet air guard
55G	1	221091	4" PVC Cap for Vent Condensate Drain Connection (above)

CODE 56 - Complete Vertical Vent/Combustion Air Kit (Same as Option CC2), P/N 221248

CODE	Qty	P/N	Description
56A/B	1	221069	Concentric Adapter Box with Silicone Sealing Ring (above)
56C	1	221215	Bird Guard 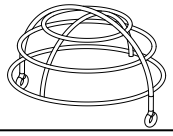
56D	2	37661	Screws for Bird Guard. #10x1/2" self-drilling
56E	1	221250	Combustion Air Inlet
56F	1	221185	Rain Collar
56G	1	221091	4" PVC Cap for Vent Condensate Drain Connection (above)

Cabinet Parts

CODE	Description		130	180	260	310
59	Door Assembly		220833		220834	
60	Access Panel (above the door)		N/A		220822	
61	Vent Panel Assy		220825		220826	
62	Vent Block Assembly		221518			
62A	Vent Block Gasket		**221516** (part of Code 62)			
63	Vent Block Cover Assembly		221519			
64	Fan Panel		220759		220760	
65	Front Panel		201692		201694	
66	Left Panel		220753		220754	
67	Bottom Pan		220827		220828	
68	Louvers		(5) 195578		(10) 195578	
69	Louver Spring		(5) 195046		(10) 195046	
70	Top Panel		220755		220756	
71	T-CORE^3 Logo	(see illustration on front cover)	221183			
72	Reznor Logo		196689		196692	
73	Cabinet Touchup Paint		**201805**, 11 oz spray can, White			
74	Horizontal Louver Paint		**207432**, 12 oz aerosol can, Maroon			

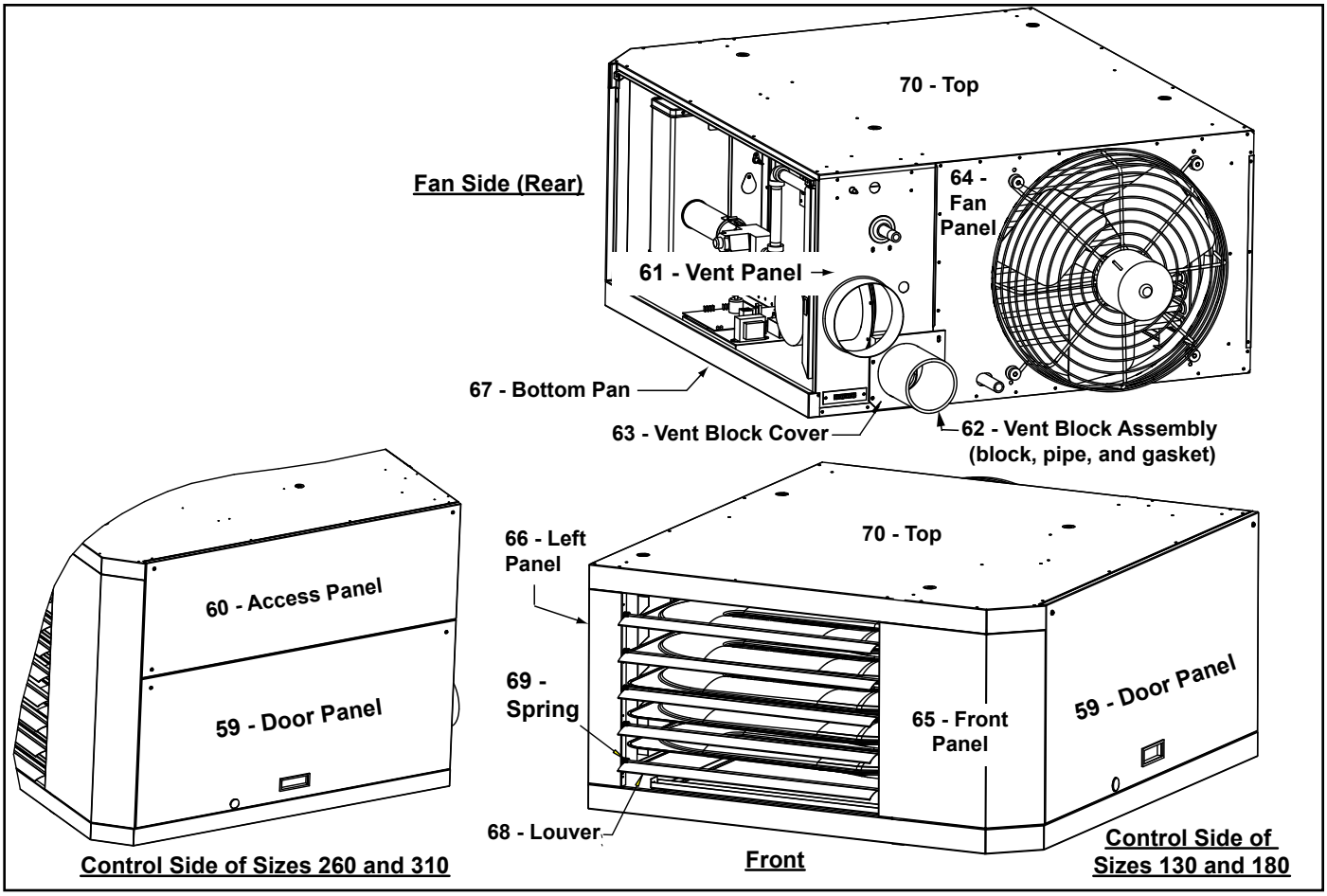

CODE 80 - Hanger Kit (Same as Option CK10)

Option CK10 - Four-point Suspension

Size	All
Option CK10 Pkg P/N	**98511**
Swivel Connector Assembly	(4) **17627**
3/8” Lock Washer	(8) **5197**
3/8” Hex Nuts	(4) **1438**

CODE 90 - Vertical Louvers (Same as Option CD1)

Size	130, 180	260, 310
Option Pkg P/N	**201199**	**201201**
Components		
Louver Frame Top & Bottom	(2) **197189**	(2) **197190**
Louver Frame Sides	(2)**197186**	(2)**197188**
Screws, #8-18 x 3/8" long, AB point, slotted indented serrated hex washer head	(20) **195638**	
Louvers	(8)**196572**	(8)**195315**
Compression Springs	(8)**195046**	

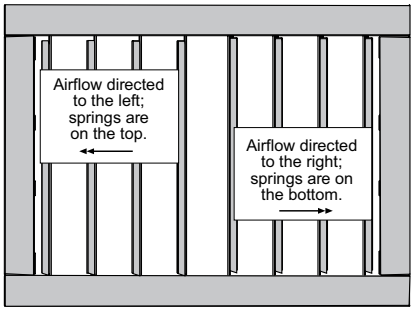

CODE 91 - Downturn Nozzles (Same as Option CD2, CD3, and CD4)

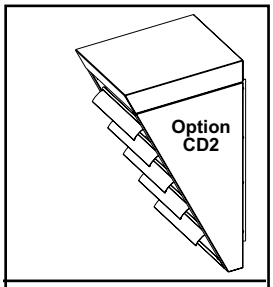

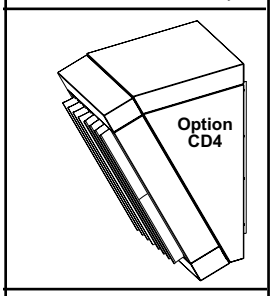

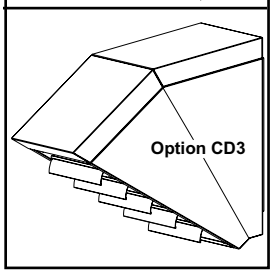

Size	130, 180	260,310
Option CD2 Pkg P/N	**201202**	**201204**
Nozzle Section Right Side	(1) **197173**	(1) **197175**
Nozzle Section Left Side	(1) **197176**	(1) **197178**
Nozzle Section Top	(1) **197170**	(1) **197172**
Nozzle Bracket	(2) **201708**	(2) **201709**
Nozzle Section Bottom	(1) **196997**	(1) **197179**
Screws, #8-18 x 3/8" long AB point, slotted indented serrated hex washer head	(16) **195638**	
Option CD4 Pkg P/N	**201208**	**201210**
Same components as Option CD2 above PLUS		
Vertical Louver	(8) **196572**	(8) **195315**
Compression Spring	(8) **195046**	
Louver Top and Bottom Support	(2) **197189**	(2) **197190**
Louver Frame Side	(2) **197186**	(2) **197188**
Screws, #8-18 x 3/8" long AB point, slotted indented serrated hex washer head	(28) **195638**	
Option CD3 Pkg P/N	**201205**	**201207**
Nozzle Section Right Side	(2) **197173**	(2) **197175**
Nozzle Section Left Side	(2) **197176**	(2) **197178**
Nozzle Section Top	(2) **197170**	(2) **197172**
Nozzle Bracket	(2) **201708**	(2) **201709**
Nozzle Section Bottom	(2) **196997**	(2) **197179**
Screws, #8-18 x 3/8" long AB point, slotted indented serrated hex washer head	(30) **195638**	

CODE 92 - Thermostat and Cover (Same as Option CL1 and CM1)

1-stage Thermostat, 24 volt, with fan switch, P/N 255350 (Same as Option CL1)

P/N 257464, Clear Plastic, Locking, Thermostat Cover, 6x5x2-1/2 (inside)
(Same as Option CM1)

www.ReznorHVAC.com;(800) 695-1901

©2014 Reznor LLC, All rights reserved.
Trademark Note: Reznor® is registered in at least the United States.

10/14 (Serial No. Date Code BNJ) Form P-UEAS (Version 10-14)