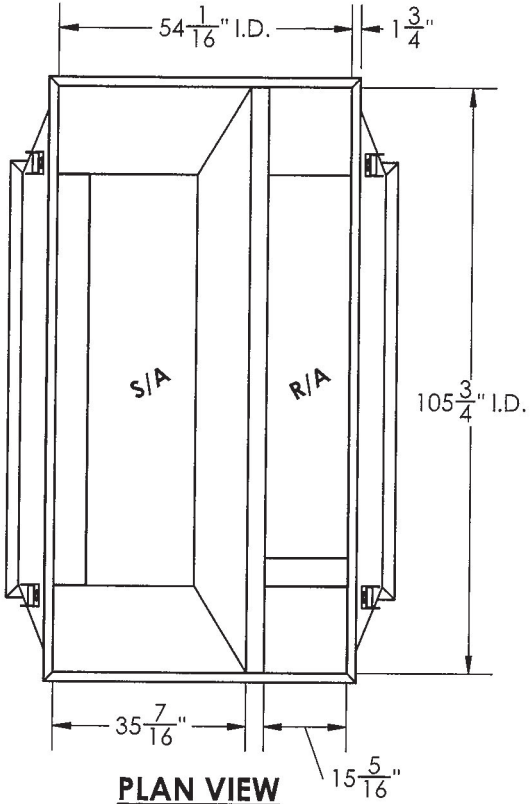

PLAN VIEW

WEIGHT: 307 LBS.

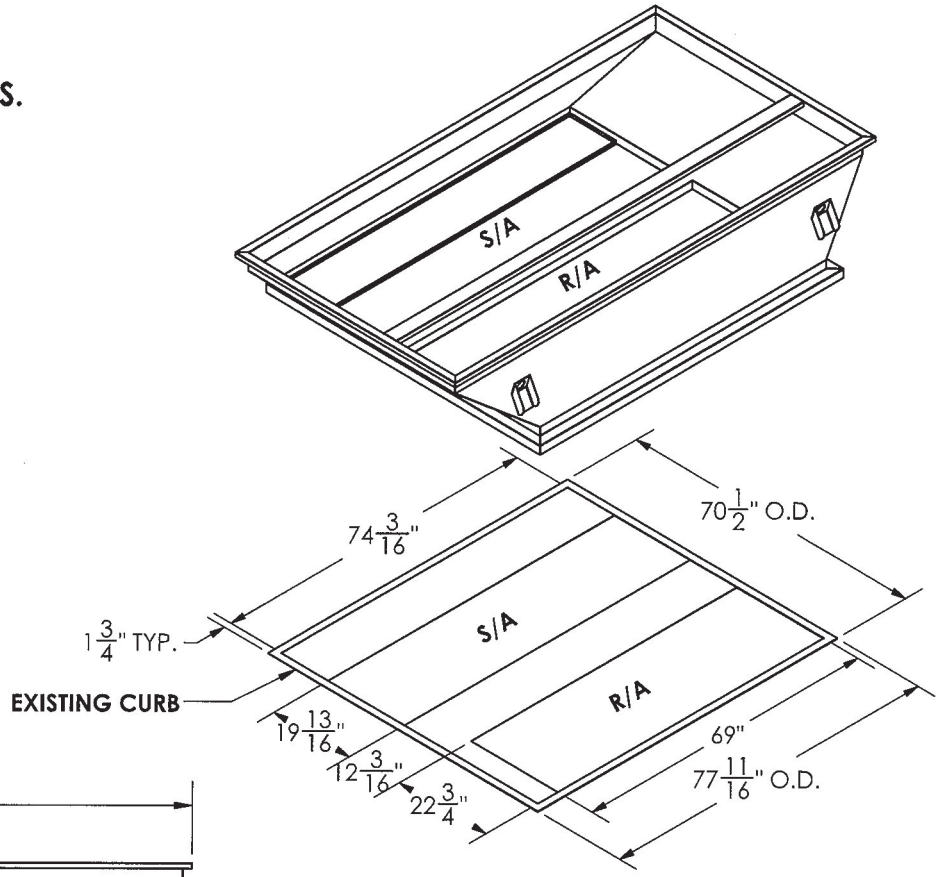

ISOMETRIC VIEW

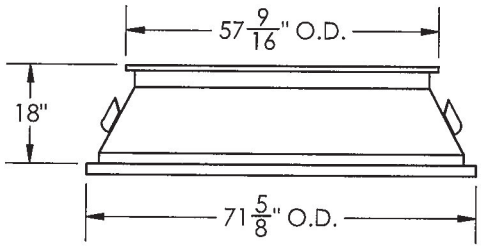

FRONT VIEW

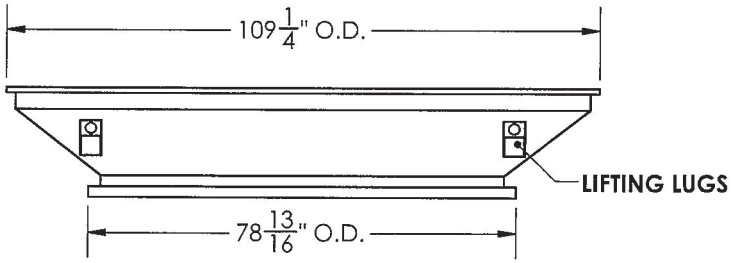

SIDE VIEW

NOTES:

1. 16 GA. GALV. STEEL CONSTRUCTION
2. INTERNALLY INSULATED WITH 1"-1.5 LB DENSITY INSULATION
3. CONTINUOUS WELDED SEAMS AND CORNERS
4. 1/4" X 1 1/4" GASKETING
5. SHIPPED FULLY ASSEMBLED
6. UNIT TO ADAPTER GASKET INCLUDED

INSTALLATION INSTRUCTIONS:

- REMOVE OLD A/C UNIT.
- APPLY 1/4" X 1 1/4" GASKETING ON EXISTING CURB.
- INSTALL & SECURE ADAPTER CURB ON EXISTING CURB AS REQUIRED BY LOCAL BUILDING CODES.
- APPLY 1/4" X 1 1/4" GASKETING ON ADAPTER CURB.
- INSTALL & SECURE NEW A/C UNIT ON ADAPTER CURB AS REQUIRED BY LOCAL BUILDING CODE.

APPROVED		
DATE		
UNLESS OTHERWISE SPECIFIED ALL DIMENSIONS SHOWN ARE IN INCHES [MILLIMETERS] MILLIMETERS ARE REFERENCE ONLY	CHECK LIST	DATE
UNLESS OTHERWISE SPECIFIED TOLERANCES ON .XX[.X] ±.03[±0.8] .XXX[.XX] ±.010[±0.25] ANGLE ±1°	Drawn by: MICHAEL	7/14/16
THIRD ANGLE		
MATERIAL Galvanized Steel		

Plenums of Florida Incorporated

CC816ACC50R1

DWG SIZE A	DWG NO:	7/29/2016	ISS
SCALE 1:48	SHEET 1 OF 1		