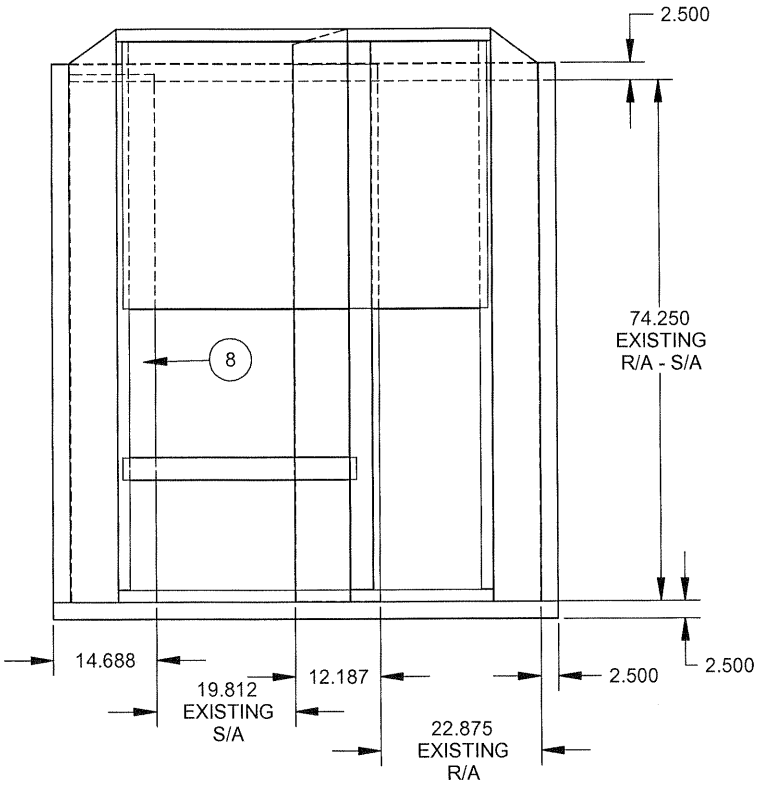

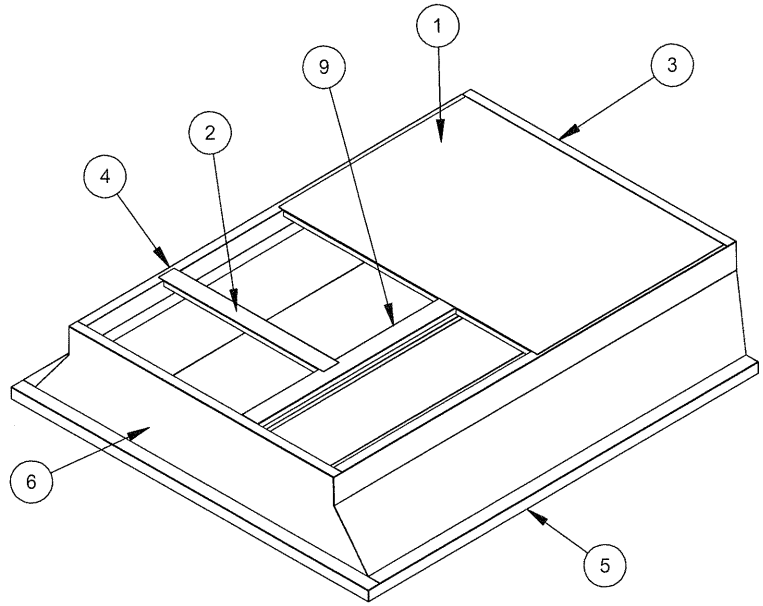

ITEM NO.	PART NUMBER	DESCRIPTION	QTY.
1	03D65B07	DECK PAN	1
2	0597030A	SUPPORT 1	1
3	CARC352A	END A	1
4	CARC353A	SIDE A	1
5	CARC354A	SIDE B	1
6	CARC355A	END B	1
7	CARC356A	ANGLE, BASE END	1
8	CARC357A	PAN, BASE A	1
9	CARC358A	DIVIDER B	1

NOTES:
1. WELD ASSEMBLY.
2. DECK PAN MUST BE REMOVABLE.
3. INSULATE INTERNALLY.
4. INCLUDE 75 L/F 1.500 x 0.250 GASKET.

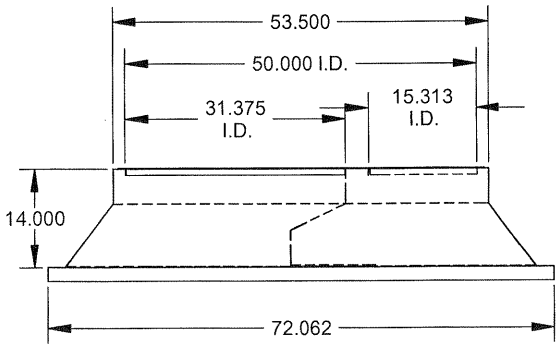

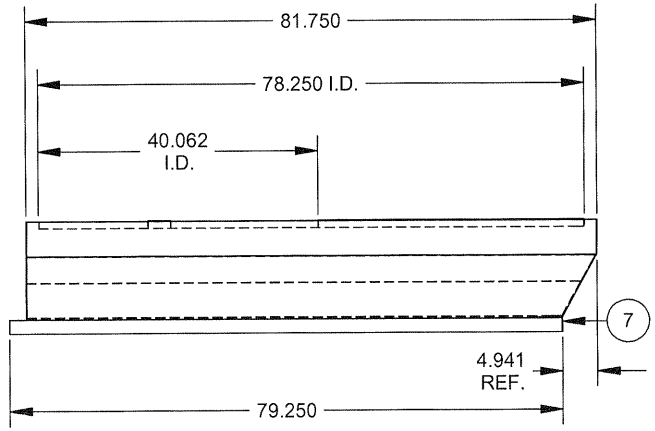

REV	ECO	DESCRIPTION	DATE	CHG	APPR
A	N/A	RELEASE	10/16/08	N/A	GA
A	7756	RE-DRAWN / RE-DESIGNED	03/24/11	RC	GA

MicroMetl Corporation
Indianapolis, IN. : (800) 662-4822 – Sparks, NV. (800) 884-4662
Longview, TX. (903) 248-4800

DESIGNED BY	RC	PART NAME	CURB ADAPTOR ASSEMBLY
DRAWN BY	RC	PART NUMBER	0821-6925-DT
PROGRAMMED BY	N/A	SIZE	B
CHECKED BY	GA	MATERIAL	REF BOM
		SHEAR SIZE	0 X 0
		SHEET	1 OF 1

THE INFORMATION CONTAINED IN THIS DRAWING IS THE SOLE PROPERTY OF MICROMETL CORPORATION. ANY REPRODUCTION IN PART OR WHOLE WITHOUT THE WRITTEN PERMISSION OF MICROMETL CORPORATION IS PROHIBITED.

(DO NOT SCALE DRAWING)

UNLESS OTHERWISE SPECIFIED DIMENSIONS ARE IN INCHES

TOLERANCES ARE:
±1/32", ±0.031", ±2°

P:\WORKING_DIRECTORY\Cerritos_Roberto\CURB ADAPTERS\0821-6925-DT(597)\0821-6925-DT