Installation and Operation Instructions for

# THE FT SERIES

## Wall-Mounted, Modulating Gas, Condensing, Combination Boiler

## Model FTCW

140,000 BTU/hr
199,000 BTU/hr

- Natural Gas (NG) - Factory Configuration
- Propane Gas (LP) - Field-Convertible

ENERGY STAR

Intertek

**FOR YOUR SAFETY:** This product must be installed and serviced by a professional service technician, qualified in hot water boiler and heater installation and maintenance. Improper installation and/or operation could create carbon monoxide gas in flue gases which could cause serious injury, property damage, or death. Improper installation and/or operation will void the warranty.

**⚠ WARNING**

**If the information in this manual is not followed exactly, a fire or explosion may result causing property damage, personal injury or loss of life.**

**Do not store or use gasoline or other flammable vapors and liquids in the vicinity of this or any other appliance.**

**WHAT TO DO IF YOU SMELL GAS**

- **Do not try to light any appliance.**
- **Do not touch any electrical switch; do not use any phone in your building.**
- **Immediately call your gas supplier from a nearby phone. Follow the gas supplier's instructions.**
- **If you cannot reach your gas supplier, call the fire department.**

**Installation and service must be performed by a qualified installer, service agency, or gas supplier.**

**⚠ AVERTISSEMENT**

**Assurez-vous de bien suivres les instructions données dans cette notice pour réduire au minimum le risque d'incendie ou d'explosion ou pour éviter tout dommage matériel, toute blessure ou la mort.**

**Ne pas entreposer ni utiliser d'essence ou ni d'autres vapeurs ou liquides inflammables dans le à proximité de cet appareil ou de tout autre appareil.**

**QUE FAIRE SI VOUS SENTEZ UNE ODEUR DE GAZ:**

- **Ne pas tenter d'allumer d'appareils.**
- **Ne touchez à aucun interrupteur. Ne pas vous servir des téléphones dans le bâtiment où vous vous trovez.**
- **Appelez immédiatement votre fournisseur de gaz depuis un voisin. Suivez les instructions du fournisseur.**
- **Si vous ne pouvez rejoindre le fournisseur de gaz, appelez le sservice des incendies.**

**L'installation et l'entretien doivent être assurés par un installateur ou un service d'entretien qualifié ou par le fournisseur de gaz.**

H2372800F

# TABLE OF CONTENTS


## SECTION 1
## Product Accessories

1.1 Introduction ..... 1
1.2 Included with the Appliance ..... 1

## SECTION 2
## Product Characteristics

2.1 Model Nomenclature (model number) ..... 3
2.2 Specifications ..... 4
2.3 Dimensions ..... 6
2.4 Names of Components ..... 8
2.5 Product Flow and Characteristics ..... 10
2.5.1 Central Heating Flow ..... 10
2.5.2 Domestic Hot Water Flow ..... 11

## SECTION 3
## Safety Regulations

3.1 Safety Symbols ..... 12
3.2 Safety Precautions and Proper Use ..... 14

## SECTION 4
## Installation

4.1 Location and Clearances ..... 16
4.2 Wall Mount Bracket ..... 17
4.2.1 Installation Height and Location ..... 17
4.2.2 Hang the Boiler ..... 17
4.3 Combustion Air ..... 18
4.3.1 Combustion Air from Room ..... 18
4.3.2 Ducted Combustion Air ..... 18
4.4 Venting (exhaust) ..... 20
4.5 General Location Guidelines ..... 21
4.6 Locations for Vent Pipe Terminator ..... 22
4.6.1 Direct Venting Clearances ..... 22
4.6.2 Non-Direct Venting Clearances ..... 23
4.6.3 Venting Requirements in Massachusetts ..... 24
4.7 Air Supply and Vent Connections at the Appliance ..... 26
4.7.1 Vent / Air Pipe Lengths ..... 26
4.7.2 Direct Venting ..... 26
4.7.3 Indoor Combustion Air ..... 27
4.8 Vent / Air Pipe Termination ..... 28
4.9 Gas Supply and Piping ..... 30
4.10 Gas Supply Pressure ..... 33
4.11 Gas Set Up and Adjustment ..... 33
4.12 High Altitude Installations. 2,000' to 10,000' ..... 34
4.13 Natural Gas to Propane Conversion ..... 36
4.14 Plumbing Guidelines ..... 40
4.15 Pressure Relief Valve ..... 43
4.16 Disposal of Condensate ..... 44
4.17 DHW Flow Restrictors ..... 45
4.18 Electrical Wiring Connections ..... 46
4.19 DIP Switches ..... 47
4.20 Control Board, Electrical Diagram ..... 48
4.21 Ladder Diagram ..... 49
4.22 Electrical Connections ..... 50

## SECTION 5
## Control Display and Operation

5.1 Control Dial and Buttons ..... 52
5.2 LCD Overview ..... 53
5.3 Operating Mode ..... 54
5.4 Status Display Mode ..... 55
5.5 DHW Set Point Change Mode ..... 56
5.6 CH Set Point Change Mode ..... 57
5.7 Storage Mode ..... 57
5.8 Installer Mode ..... 58
5.9 Outside Temperature (option) ..... 60
5.10 External Set Point Temperature Control ..... 60
5.11 Error Mode ..... 61

## SECTION 6
## Error Codes

6.1 Error Codes ..... 62
6.2 Fault Tree Analysis ..... 65

## SECTION 7
## Trouble Shooting

7.1 Diagnostics ..... 67
7.2 Suggested Corrective Actions ..... 68

## SECTION 8
## Maintenance

8.1 Annual Startup and General Maintenance ..... 70
8.2 Flushing the Boiler ..... 72
8.3 Draining and Cleaning ..... 73

## SECTION 9
## Installation Check

9.1 Quick View ..... 74
9.2 Final Check Lists ..... 74

## SECTION 10
## Repair Part Diagram

10.1 Parts List and Illustrations ..... 76-81
10.2 Notes: ..... 82

# SECTION 1
# Product Accessories

## 1.1 Introduction

This manual provides information necessary for the installation, operation, and maintenance of the **FT Series Wall Mounted, Combination Boiler**. All application and installation procedures must be read and reviewed completely before proceeding with the installation. Consult the factory, or your local factory representative, with any problems or questions regarding this equipment. Experience has shown that most operating problems are caused by improper installation.

All installations must be made in accordance with
1) American National Standard Z223.1/NFPA54-Latest Edition "National Fuel Gas Code" or
2) CSA B149.1 "Natural Gas and Propane Installation Code" and with the requirement of the local utility or other authorities having jurisdiction. Such applicable requirements take precedence over the general instructions contained herein.

All electrical wiring is to be done in accordance with the local codes, or in the absence of local codes, with: 1) The National Electrical Code ANSI/NFPA No. 70-latest Edition, or 2) CSA STD. C22.1 "Canadian Electrical Code - Part 1". This appliance must be electrically grounded in accordance with these codes.

## 1.2 Included with the Appliance

| Item | Description | Qty |
|---|---|---|
| Wall Mounted, Combination Boiler FTCW140 / 199 | | 1 |
| Installation Instructions and User's Manual | | 1 |

## 1.2 Included with the Appliance (continued)

| Items | Descriptions | | Qty |
|---|---|---|---|
| Condensate Hose | | | 1 |
| Wall Mount Bracket | FT1894 | | 1 |
| 2 types of Wall Anchors | 4 4 | | |
| Pressure Relief Valve (CH LINE 3/4″ 30psi) Model: CASH ACME F-82 | | | 1 |
| 3” Mesh Screens | | | 2 |
| O-Ring and Gasket Kit | | | 1 |
| Outdoor Sensor with screws and anchors | | | 1 |
| | FTCW140 | FTCW199 | |
| 4.5 GPM Flow Restrictor (dark blue) | * | N/A | 1 |
| Propane Conversion Orifice | | | 1 |

*A 3.2 GPM Flow Restrictor (white) has been factory installed. See Section 4.17

# SECTION 2.

## Product Characteristics

### 2.1 Model Nomenclature (model number)

The Model Nomenclature is shown on your Rating Plate and consists of a series of letters and numbers ( **Nomenclature** ) that further identifies the characteristics of your FT.

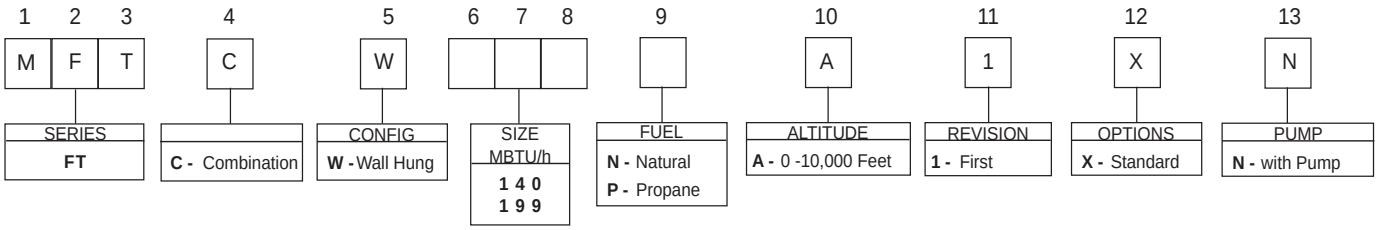


**Figure 1. Model Nomenclature**

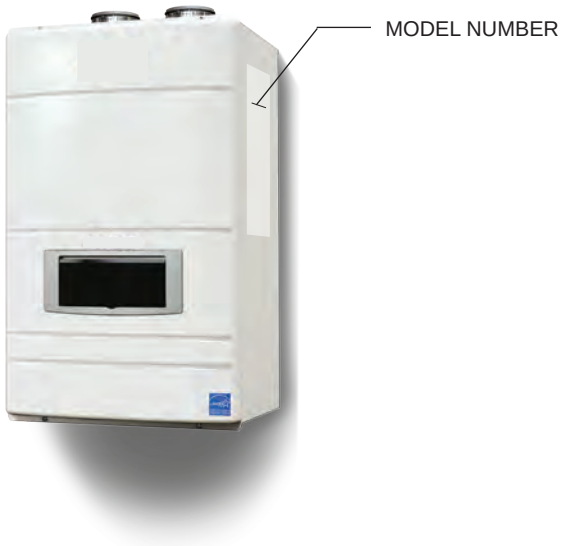


**Figure 2. Locating the model number**

## 2.2 Specifications

| Model Name | | FTCW140 | |
|---|---|---|---|
| Gas Input Rate | MAX | 140,000 Btu/h | |
| | MIN | 28,000 Btu/h | |
| Hot Water Capacity | 35°F Rise | 7.1 GPM | |
| | 45°F Rise | 5.5 GPM | |
| | 77°F Rise | 3.2 GPM | |
| Installation | | Indoor / Wall hung type | |
| Flue System | | Sealed Combustion Direct / Single Vent / Concentric Vent | |
| Vent Run | | 2″(50ft) , 3″(100ft) Schedule 40 CPVC, PP, PVC | |
| Gas Supply Pressure | NG | 3.5″ WC to 10.5″ WC | |
| | LP | 8.0″ WC to 13″ WC | |
| Manifold Pressure | Gas type | NG | LP |
| | Vent size | 2″ or 3″ VENT | 2″ or 3″ VENT |
| | Max Fire | -0.216” WC | -0.216” WC |
| | Min Fire | 0.002” WC | 0.079” WC |
| Power Supply | Main Supply | 120V 60Hz / 4A | |
| | Maximum Power Consumption | 160W | |
| Ignition System | | Direct Electronic Ignition / Automatic Flame Sensing | |
| Burner System | | Single Orifice Premixed Fuel Modulation | |
| Gas Valve System | | Combination modulating (Current proportional) | |
| Minimum Flow Rate | | 0.5 GPM | |
| Dimensions | | W17.25″ - H29.0″ - D15.5″ | |
| Shipping Weight | | 111 lbs (50 kg) | |
| Sub Heat Exchanger Water Capacity(DHW) | | Under 1 Gallon | |
| Main Controller / Control Panel | | NGTX-900CP / P-920C | |
| Domestic Hot Water Pressure, DHW | | Min 15 ~ Max 150 PSI | |
| Central Heat Water Pressure, CH | | Min 15 ~ Max 30 PSI | |
| Connection Sizes | Cold Water Inlet / Hot Water Outlet | 3/4″ NPT | |
| | (CH) Space Heating Supply/Return | 1″ NPT | |
| | Gas Inlet | 3/4″ NPT | |
| Materials | Casing | Cold Rolled Carbon Steel | |
| | Heat Exchanger | Primary Heat Exchanger : Stainless Steel<br>Sub Heat Exchanger : Stainless Steel | |
| Safety Devices | | Flame Rod, Overheat Cut Off Device, Gas Valve Operation Detector, Exhaust Temperature High Limit Switch, Water Temperature High Limit Switch | |

## 2.2 Specifications (continued)

| Model Name | | FTCW199 | |
|---|---|---|---|
| Gas Input Rate | MAX | 199,000 Btu/h | |
| | MIN | 19,900 Btu/h | |
| Hot Water Capacity | 35°F Rise | 9.88 GPM | |
| | 45°F Rise | 7.7 GPM | |
| | 77°F Rise | 4.8 GPM | |
| Installation | | Indoor / Wall hung type | |
| Flue System | | Sealed Combustion Direct / Single Vent / Concentric Vent | |
| Vent Run | | 2″(50ft) , 3″(100ft) Schedule 40 CPVC, PP, PVC | |
| Gas Supply Pressure | NG | 3.5″ WC to 10.5″ WC | |
| | LP | 8.0″ WC to 13″ WC | |
| Manifold Pressure | Gas type | NG | LP |
| | Vent size | 2″ VENT | 3″ VENT |
| | Max Fire | -0.314”WC | -0.173”WC |
| | Min Fire | -0.015”WC | -0.015”WC |
| Power Supply | Main Supply | 120V 60Hz / 4A | |
| | Maximum Power Consumption | 160W | |
| Ignition System | | Direct Electronic Ignition / Automatic Flame Sensing | |
| Burner System | | Single Orifice Premixed Fuel Modulation | |
| Gas Valve System | | Combination modulating (Current proportional) | |
| Minimum Flow Rate | | 0.5 GPM | |
| Dimensions | | W19.6” - H32.0” - D16.3” | |
| Shipping Weight | | 130 lbs (59 kg) | |
| Sub Heat Exchanger Water Capacity(DHW) | | Under 1 Gallon | |
| Main Controller / Control Panel | | NGTX-900CP / P-920C | |
| Domestic Hot Water Pressure, DHW | | Min 15 ~ Max 150 PSI | |
| Central Heat Water Pressure, CH | | Min 15 ~ Max 30 PSI | |
| Connection Sizes | Cold Water Inlet / Hot Water Outlet | 3/4″ NPT | |
| | (CH) Space Heating Supply/Return | 1″ NPT | |
| | Gas Inlet | 3/4″ NPT | |
| Materials | Casing | Cold Rolled Carbon Steel | |
| | Heat Exchanger | Primary Heat Exchanger : Stainless Steel<br>Sub Heat Exchanger : Stainless Steel | |
| Safety Devices | | Flame Rod, Overheat Cut Off Device, Gas Valve Operation Detector, Exhaust Temperature High Limit Switch, Water Temperature High Limit Switch | |

## 2.3 Dimensions FTCW140

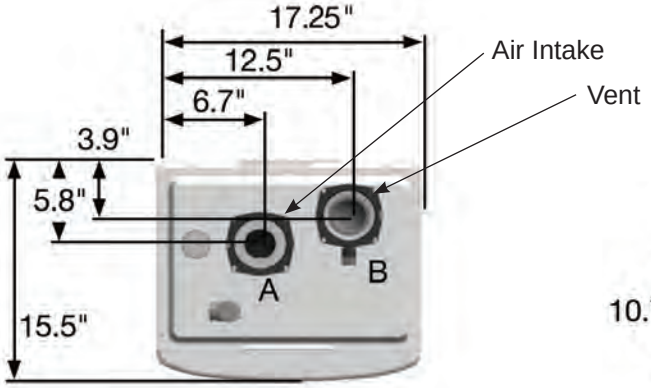


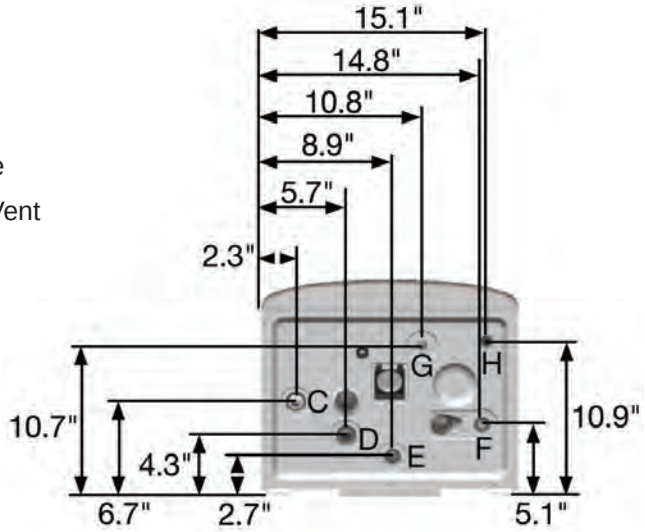

| | Description | Diameter |
|---|---|---|
| A | Air Intake collar | 3" |
| B | Vent Pipe Collar | 3" |
| C | ‘CH’ Supply | 1" NPT |
| D | ‘CH’ Return | 1” NPT |
| E | ‘DHW’ Outlet | 3/4” NPT |
| F | ‘DHW’ Inlet | 3/4” NPT |
| G | Gas Inlet | 3/4” NPT |
| H | Condensate Line | 1/2" NPT |

## 2.3 Dimensions FTCW199

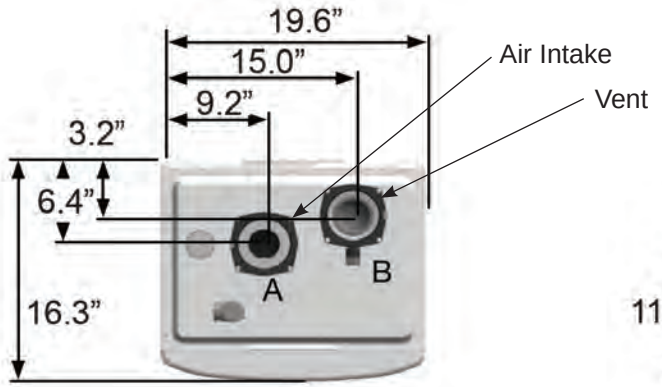


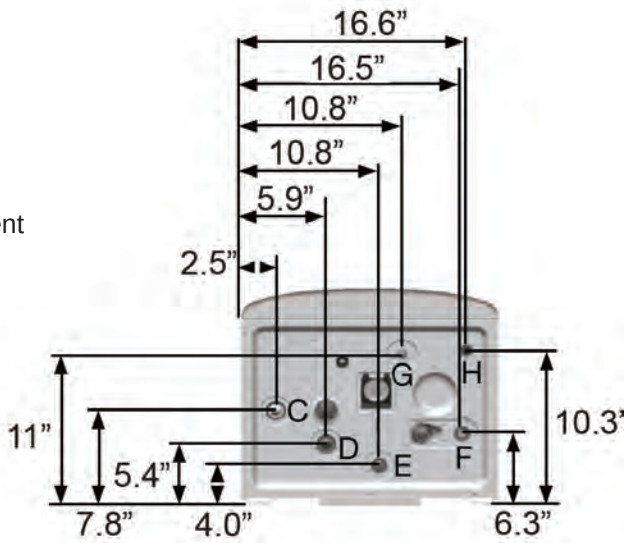

| | Description | Diameter |
|---|---|---|
| A | Air Intake collar | 3" |
| B | Vent Pipe Collar | 3" |
| C | ‘CH’ Supply | 1" NPT |
| D | ‘CH’ Return | 1” NPT |
| E | ‘DHW’ Outlet | 3/4” NPT |
| F | ‘DHW’ Inlet | 3/4” NPT |
| G | Gas Inlet | 3/4” NPT |
| H | Condensate Line | 1/2" NPT |

## 2.4 Names of Components

FTCW140

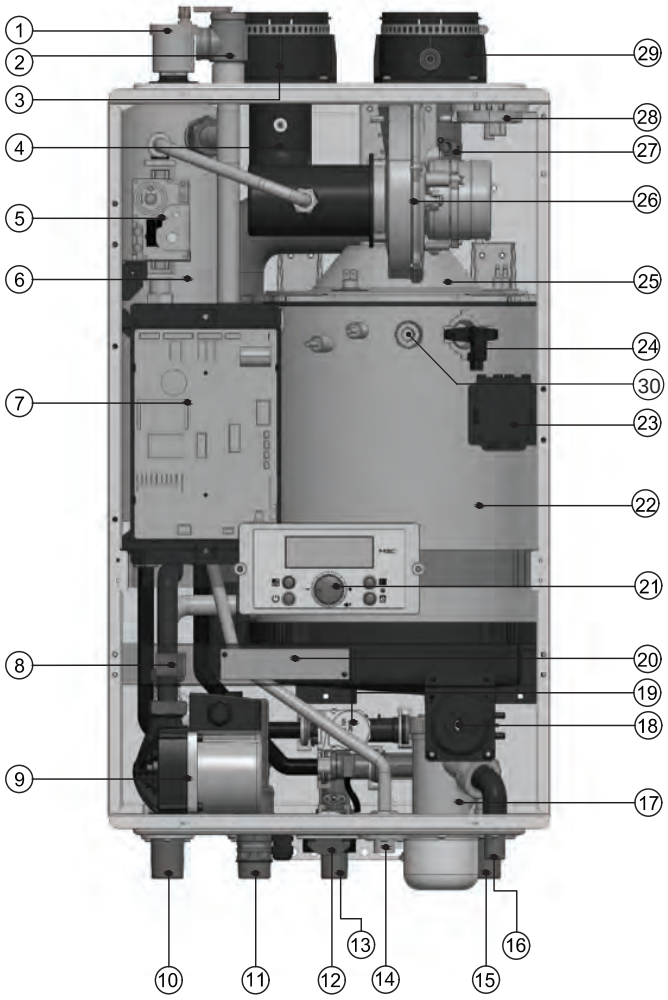


| # | Name of Component |
|---|---|
| 1 | Air Vent (air eliminator) |
| 2 | Pressure Relief Valve |
| 3 | Air Intake Collar |
| 4 | Air Gas Mixing Pipe |
| 5 | Gas Valve |
| 6 | DHW Water Tank |
| 7 | Main PCB |
| 8 | Manual Power Switch (ON / OFF) |
| 9 | Recirculation Pump DHW / CH Primary Pump |
| 10 | 'CH' Supply Connection |
| 11 | 'CH' Return Connection |
| 12 | CH Pressure Gauge |
| 13 | DHW Outlet Connection |
| 14 | Gas Inlet Connection |
| 15 | DHW Inlet Connection (filter and flow restrictor) |

| # | Name of Component |
|---|---|
| 16 | Condensate Connection |
| 17 | Condensate Trap |
| 18 | Air Pressure Switch (condensate) |
| 19 | Mixing Valve |
| 20 | Terminal Block |
| 21 | Control Panel and Display |
| 22 | Heat Exchanger |
| 23 | Ignition Trans |
| 24 | Flame Detecting Sensor |
| 25 | Burner Case |
| 26 | BLDC Fan (Blower) |
| 27 | Vent Pipe |
| 28 | Air Pressure Switch |
| 29 | Vent Pipe Collar |
| 30 | Sight Glass |

FTCW199

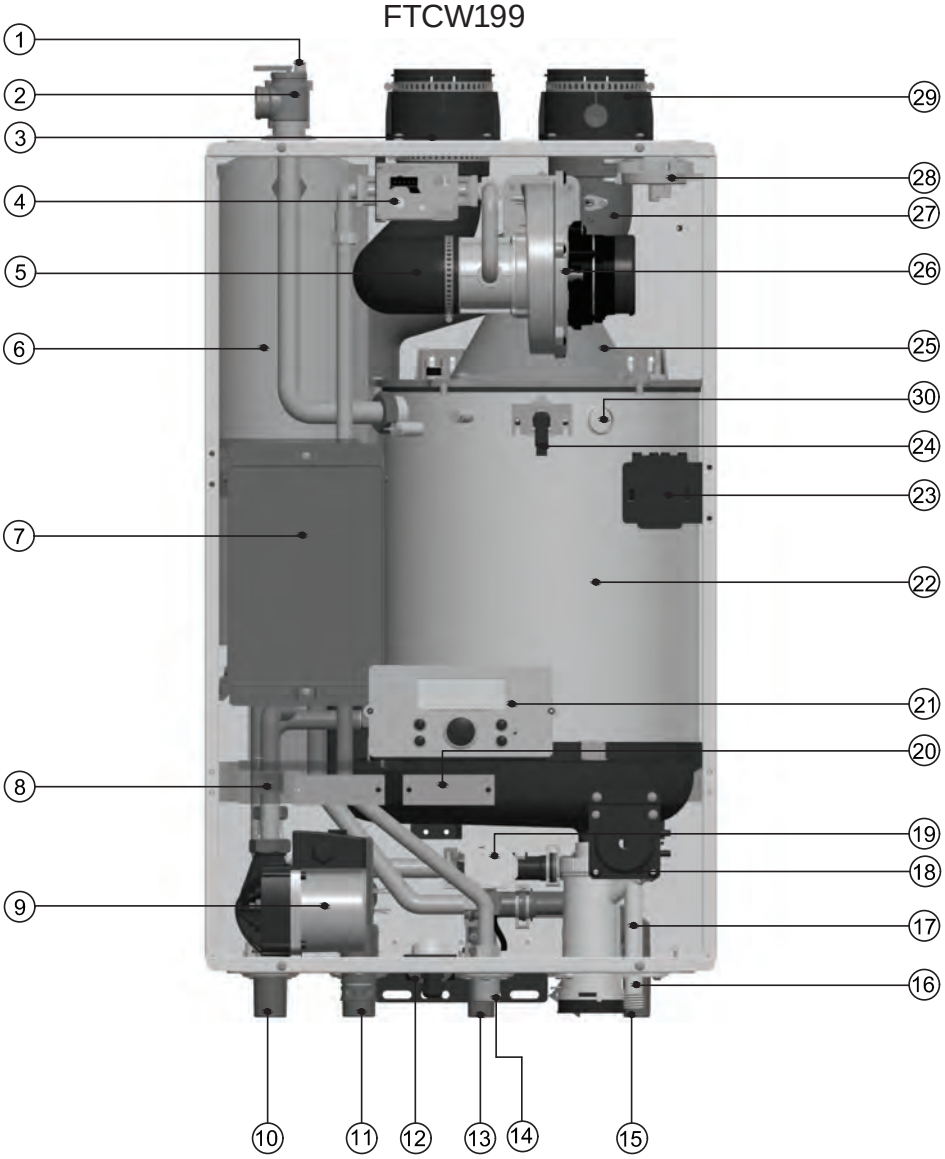


| # | Name of Component |
|---|---|
| 1 | Air Vent (air eliminator) |
| 2 | Pressure Relief Valve |
| 3 | Air Intake Collar |
| 4 | Gas Valve |
| 5 | Air Gas Mixing Pipe |
| 6 | DHW Water Tank |
| 7 | Main PCB |
| 8 | Manual Power Switch (ON / OFF) |
| 9 | Recirculation Pump DHW / CH Primary Pump |
| 10 | 'CH' Supply Connection |
| 11 | 'CH' Return Connection |
| 12 | CH Pressure Gauge |
| 13 | DHW Outlet Connection |
| 14 | Gas Inlet Adapter |
| 15 | DHW Inlet Connection (filter and flow restrictor) |

| # | Name of Component |
|---|---|
| 16 | Condensate Connection |
| 17 | Condensate Trap |
| 18 | Air Pressure Switch (condensate) |
| 19 | Mixing Valve |
| 20 | Terminal Block |
| 21 | Control Panel and Display |
| 22 | Heat Exchanger |
| 23 | Ignition Trans |
| 24 | Flame Detecting Sensor |
| 25 | Burner Case |
| 26 | BLDC Fan (Blower) |
| 27 | Vent Pipe |
| 28 | Air Pressure Sensor |
| 29 | Vent Pipe Collar |
| 30 | Sight Glass |

## 2.5 Product Flow Paths and Characteristics

### 2.5.1 Central Heating flow. Combination Boiler Heating Mode.

Water in the heating pipe is used for space heating.

**FTCW140**

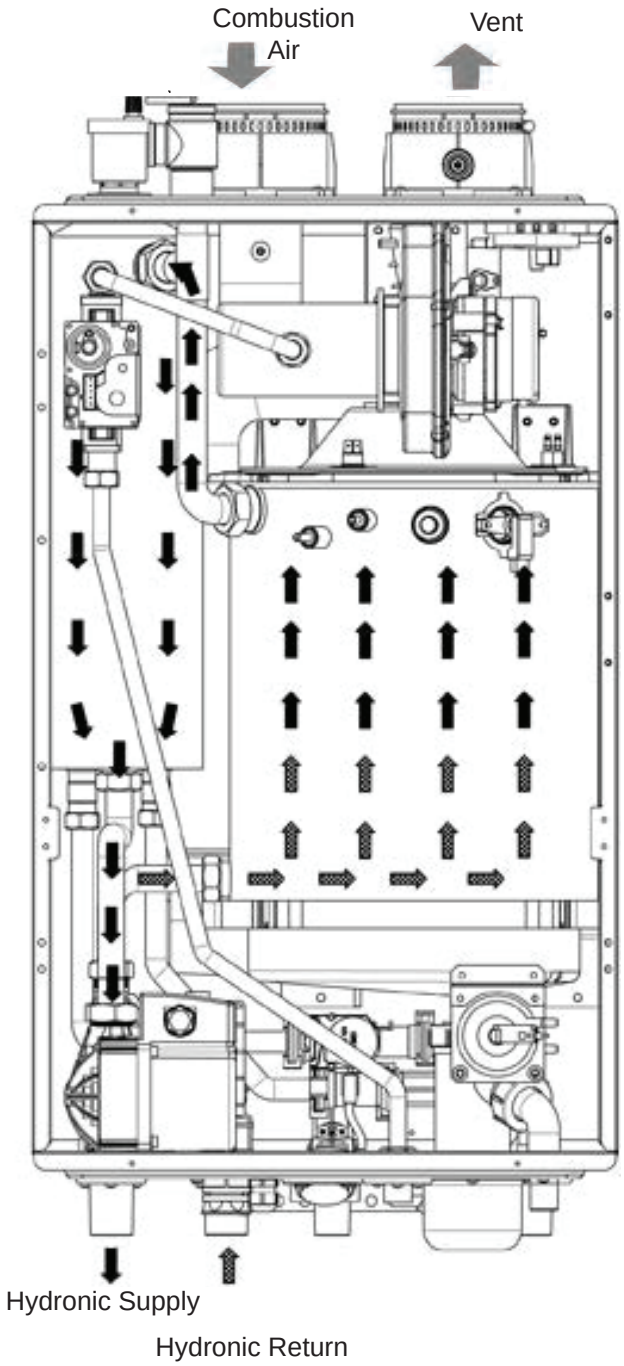


**FTCW199**

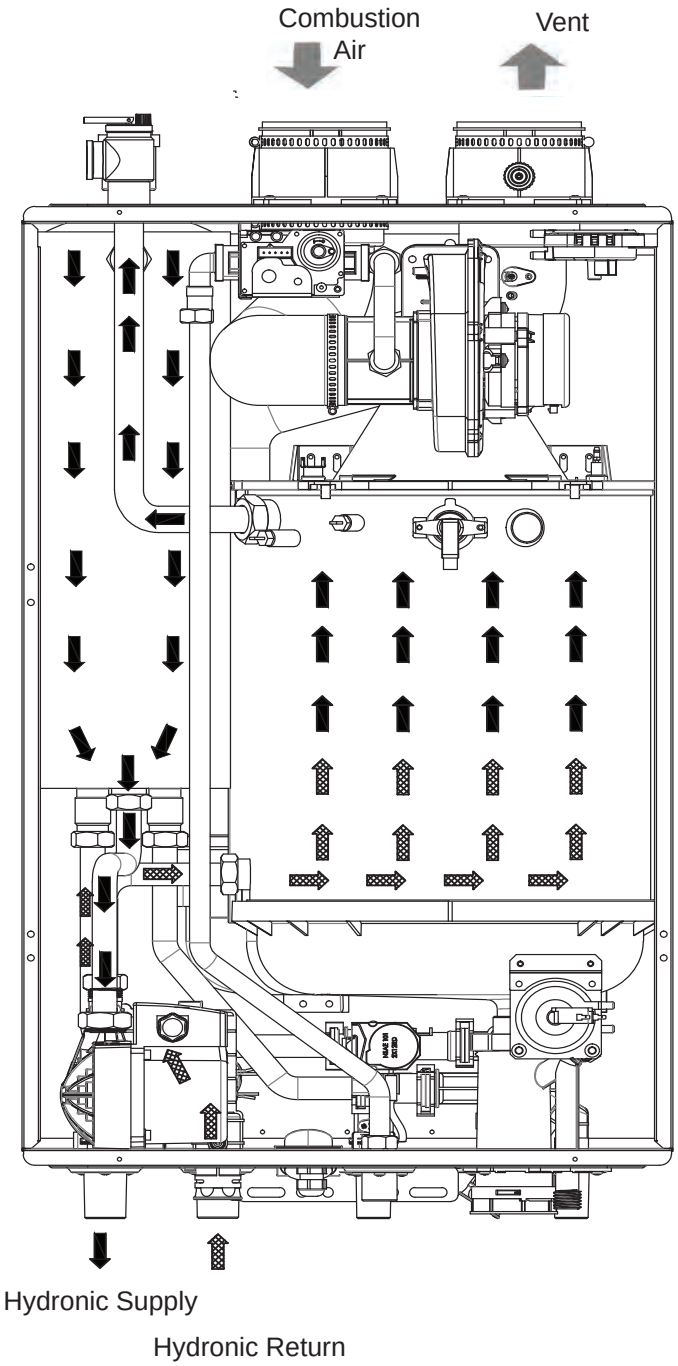

## 2.5 Product Flow Paths and Characteristics

### 2.5.2 Domestic Hot Water flow. Combination Boiler Domestic Hot Water Mode.

Cold water passes through the exchanger and is heated via a mini indirect tank.
The domestic hot water (DHW) is provided on demand.

**FTCW140**

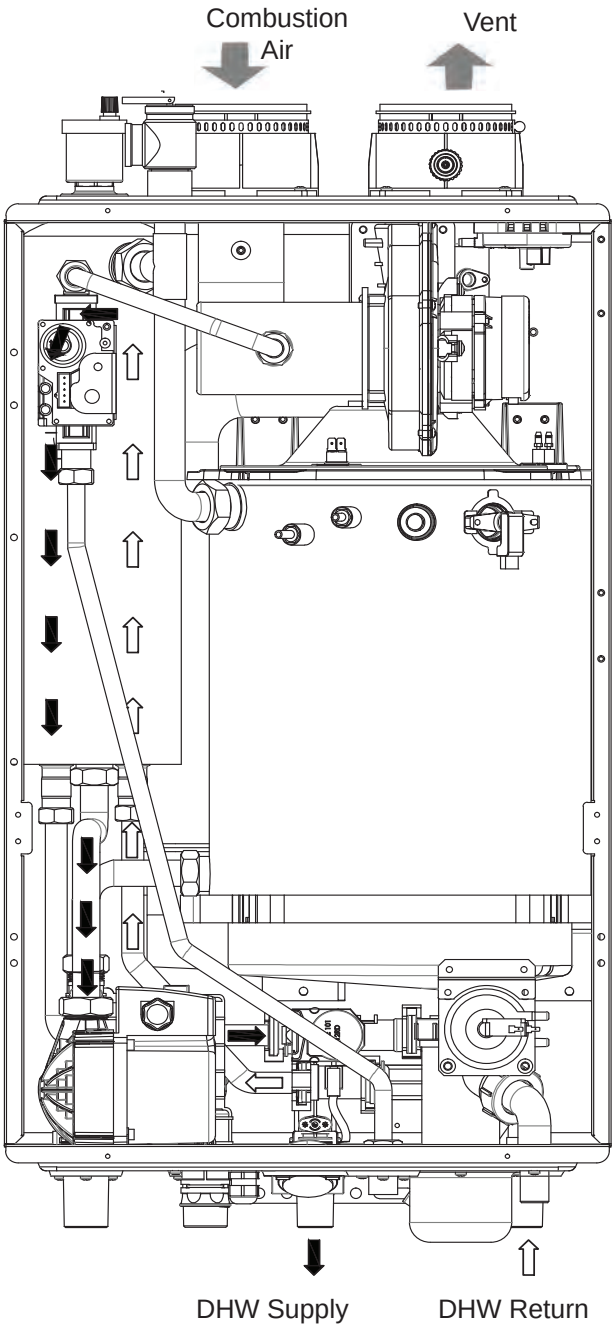


**FTCW199**

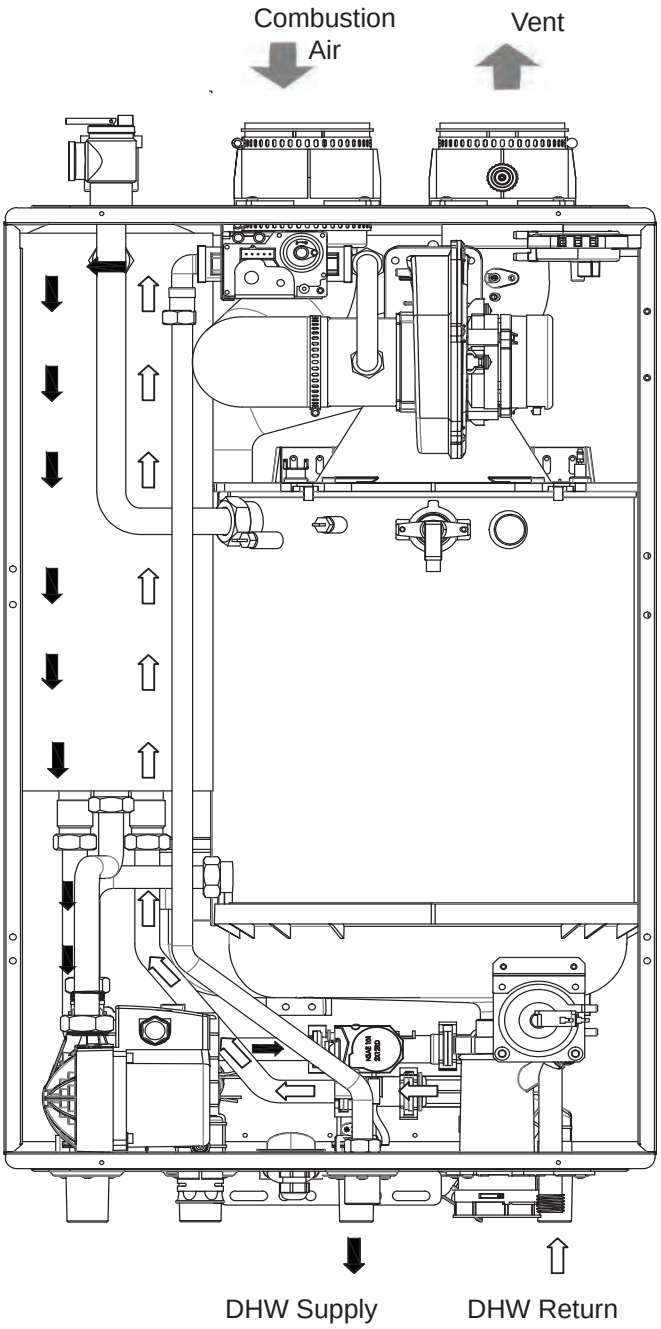

# SECTION 3.

## Safety Regulations

### 3.1 Safety Symbols

**⚠ WARNING**

To avoid product damage, personal injury, or even possible death, carefully read, understand, and follow all the instructions in the Installation and Operation manual before installation, operation and service the Boiler.

Manufacturer cannot anticipate every circumstance that might involve a potential hazard. Therefore, all possible incidents are not included in our warnings. Proper installation, operation, and service are your responsibility. You must make sure that the operation and settings of the Boiler are safe for you and for others.

This manual provides Safety Symbols. When the user fails to adhere to the following requirement, it may cause death, serious injury, and substantial property damage.

For safety symbols, 'DANGER', 'WARNING', CAUTION' are indicated and the definitions for these terms are as follow:

**⚠ DANGER**

Indicates an imminently hazardous situation which, if not avoided, will result in death or serious injury. This signal word is limited to the most extreme situations.

**⚠ WARNING**

Indicates a potentially hazardous situation which, if not avoided, could result in death or serious injury.

**⚠ CAUTION**

Indicates a potentially hazardous situation which, if not avoided, may result in minor or moderate injury. It is also used to alert against unsafe practices and hazards involving only property damage.

**⚠ WARNING**

FOR YOUR SAFETY READ BEFORE OPERATING

If you do not follow these instructions exactly, a fire or explosion could result causing property damage, personal injury or loss of life.

A. This appliance does not have a pilot. It is equipped with an ignition device which automatically lights the burner. Do not try to light the burner by hand.

B. BEFORE OPERATING smell all around the appliance area for gas. Be sure to smell next to the floor because some gas is heavier than air and will settle on the floor.

WHAT TO DO IF YOU SMELL GAS

- Do not try to light any appliance.
- Do not touch any electric switch; do not use any phone in your building.
- Immediately call your gas supplier from a neighbor's phone. Follow the gas supplier's instructions.
- If you cannot reach your gas supplier, call the fire department.

C. Use only your hand to push in or turn the gas control knob. Never use tools. If the knob will not push in or turn by hand, don't try to repair it, call a qualified service technician. Force or attempted repair may result in a fire or explosion.

D. Do not use this appliance if any part has been under water. Immediately call a qualified service technician to inspect the appliance and to replace any part of the control system and any gas control which has been under water.

This appliance must be installed in accordance with local codes if any; if not, follow ANSI Z224.1/NFPA 54 or CAN/CSA B149.1, Natural Gas and Propane Installation Code, as applicable.

■ This appliance is certified for use at altitudes up to 4,500ft(1,370m) in accordance to the latest CSA/CGA 2.17-M91 Gas-Fired Appliances for Use at High Altitudes.

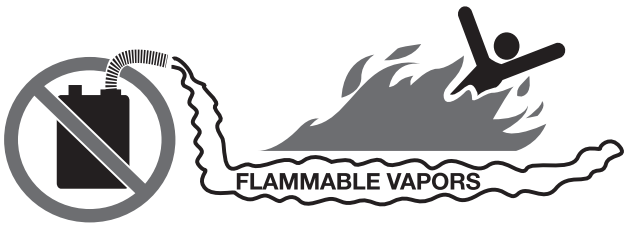


⚠ DANGER

- Vapors from flammable liquids will explode and catch on fire. These will cause death or severe burns.

Do not use or store flammable products such as gasoline, solvents or adhesives in the same room or area near the appliance.

Keep flammable products

- Far away from boiler
- In approved containers
- Tightly closed
- Out of children's reach

Vapors

- Cannot be seen
- are heavier than air
- spread on the floor
- Can spread from other rooms to the main burner by air currents

Do not install the appliance where flammable products will be stored.
Read and follow boiler warnings and instructions thoroughly. If owner's manual is missing, contact the retailer or manufacturer.

- This combination boiler must be installed by a qualified plumber, a licensed gas fitter, and/or a professional service technician.
  Improper installation and/or operation will cause a potentially hazardous situation, such as serious injury or death. Also, it will void the warranty.
  - The National Fuel Gas Code NFPA 54 / ANSI Z224.1
  - National Electric Code ANSI/NEPA 70
  - All applicable local, state, national and provincial codes, regulations and laws.

- Proper care is your responsibility. Carefully read and understand the Operating Information in this manual before operating the Boiler.

- Be aware of the location of the gas shut-off valve and operation method. Close the gas shut-off valve immediately if the appliance is subjected to fire, overheating, flood, physical damage, or any other damaging condition that might affect the operation of the unit. Boiler must be checked by a qualified technician before resuming operation.

- DO NOT use this Boiler if any part has been under water. Immediately call a qualified technician for inspecting the Boiler and replacing any part of the control system and gas control which have been under water.

- Do not power up the unit until the gas and water supply valves are fully opened. Make sure that the fresh air intake port and exhaust gas port are opened and functional.

- DO NOT attempt to install, repair, or service this Boiler by yourself.
  Do not change any part of the Boiler.
  Contact a qualified technician if the Boiler needs repair or maintenance.
  Ask your gas supplier for a list of qualified service providers.

- DO NOT use spray paint, hair spray, or any other flammable spray near Boiler or near the exterior fresh air inlet port. DO NOT place any items in or around the exterior exhaust gas outlet port and/or fresh air inlet port. These could restrict or block the flow in or out of the vent system.

- "Caution: While repairing control, all wires are labeled. You must connect the wires in accordance with the instruction.
  Wiring errors can cause improper and dangerous operation.

- "Verify proper operation after servicing operation"

- This consists of the gas ignition system components which are protected from water (dripping, spraying, rain, etc.) during operation and service (circulator replacement, condensate trap, control replacement, etc.).

- After installing the heater, safety devices must be tested.

- This boiler is equipped with a blocked vent shutoff system.
  If the error code '41' occurs, follow the instructions below.

  - First, turn off the manual gas valve.
  - Make sure that there is no foreign object in the vent passage or rodent screen.
  - If you do not find any problem, do the following.
  - Turn off the error state by pressing the power button of control panel.
  - If the error occurs repeatedly, call your service technician or gas supplier.

# SECTION 3.
# Safety Regulations

3.2 Safety Precautions and Proper Use

## Before Operation

1. Check the Gas Type (NG/LP)
When using or moving the unit for the first time, check if gas type matches with the gas type of the Boiler. Check whether the gas type which is supplied is NG (Natural Gas) or LP (Propane) and also check the Boiler gas type.
The gas type is indicated on the rating plate on side of the Boiler.

2. Check the Power (120V 60Hz)
Check that the appliance is connected properly.

3. Check the Cold Water Inlet valve
Please keep the appliance water inlet valve open at all times. The appliance will not ignite when insufficient water or no water is in the heating pipes. (valve: always open position)

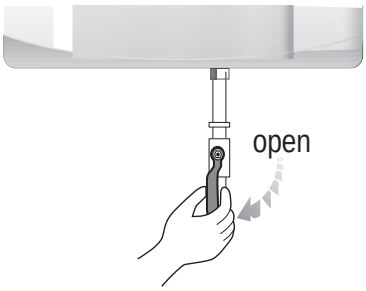


4. Check the Gas Valve
Check that the manual gas shut-off valve that supplies the FT is opened.

5. Check the area around the appliance and remove any combustible or flammable materials. Remove laundry or any other items that are on or near the boiler or vent pipe.

## When in Operation ⚠ CAUTION

1. Caution for Gas leak
Frequently check for a gas leak at the gas connection portion with soapy water.

Steps to take if you have a Gas leak.
1. Shut down the boiler as soon as gas fumes are detected.
2. Close the intermediate gas valve.
3. Open windows for ventilation.
4. Call a qualified service technician for immediate repair.

2. Caution for Ventilation
Make sure that there is sufficient inflow and outflow of air ventilation while using the unit.
If the ventilation is improper, combustion quality may deteriorate inside the appliance and cause shortened life of the appliance.

3. Burn Warning
Be careful not to burn yourself on the flue or pipes. They become extremely hot during operation.

**⚠ WARNING**

Do not use the appliance for any other purpose than for heating and hot water.
Do not store combustibles or flammable material such as gasoline near the appliance.
Do not store other items on or near this boiler.
Do not store combustible (flammable) materials such as papers.
Do not hang clothes on the vent pipe. This may start a fire.

---

**⚠ CAUTION**

**Scalding Risk: Manufacturer recommends the use of a thermostatic mixing valve at domestic hot water outlet (boiler location) to reduce potential for scalding. Contact Manufacturer for recommended models.**

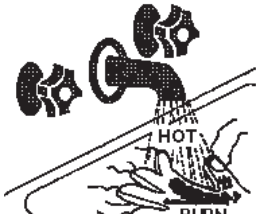


---

- After repair of gas pipeline or gas regulator replacement, call A qualified contractor for inspection before starting it up.

## Carbon monoxide poisoning

If vent pipe fumes enter the room, it could cause poisoning by carbon monoxide gas. Check that the vent pipes are properly connected. Open windows for ventilation. Call a qualified service technician for immediate repair.

## Gas leakage test.

Gas supply line must be inspected regularly.

## Do not shut off the Boiler.

When you leave home for a long time, do not shut off Boiler. The Boiler has a freeze protection function. The ceramic heater is installed inside of the heater's internal pipe to protect the heater from freezing.

## Do not wipe the appliance or control panel with wet cloth.

Electric shock may occur, or internal parts may fail due to the exposure to moisture.

## Do not disassemble the Boiler.

If repair is required, call your local qualified technician.

# SECTION 4. Installation

## 4.1 Location and Clearances

The FT must be mounted to a suitable wall by a qualified heating contractor under the guidelines of a boiler. The wall may be of concrete or wood. Suitable fasteners for concrete or wood must be used. Failure to wall mount this boiler using correct fasteners will affect the performance and life expectancy of the boiler and will void the warranty.

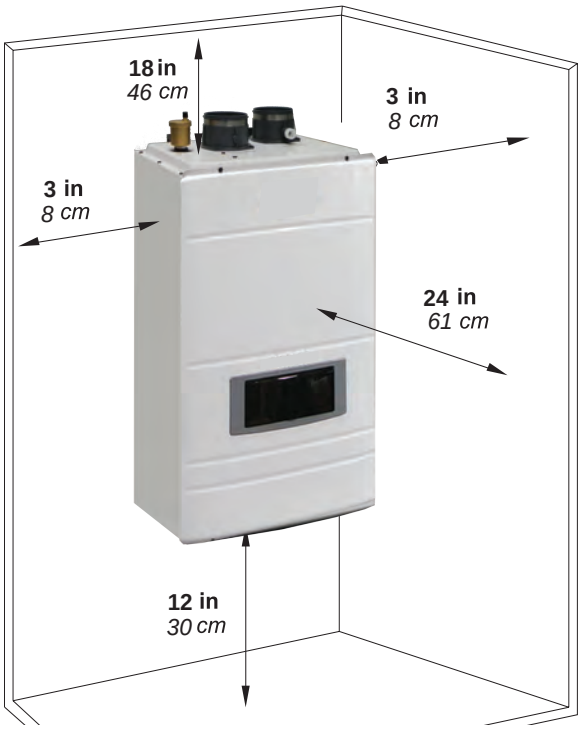


**Figure 3. Locating the Appliance.**
Minimum clearances to Combustibles.

| For Installation from Non-Combustibles and Combustibles | | Suggested Service Clearance |
|---|---|---|
| TOP of appliance | 18 in (46 cm) | 18 in (46 cm) |
| BACK of appliance | 5/8 in (1.5 cm) | 5/8 in (1.5 cm) |
| FRONT of appliance | 24 in (61 cm) | 40 in (101 cm) |
| SIDE of appliance | 3 in (7 cm) | 8 in (20 cm) |
| BOTTOM of appliance | 12 in (30 cm) | 24 in (61 cm) |

**Table 1. Minimum Clearances to Combustibles and for Service.**

### ⚠ WARNING

- Installations must comply with
  - All the local, state, provincial, and national codes, laws, regulations and ordinances.
  - National Fuel Gas Code, ANSI Z223.1 – The latest version.
  - National Electrical Code.
  - A National Standard of Canada CAN/CSA-B149.1
- Check before placing the Combination boiler
  - Always check the connected components which are near to the heater. The components are below.
- Water piping position / Venting adapter / Gas supply piping / Electrical power / Condensate drain hose.
  - Inspect area around Combination boiler. Remove any combustible materials, gasoline and other flammable liquids. Failure to keep Combination boiler area clear and free of combustible materials, gasoline and other flammable liquids and vapors can result in severe personal injury, death or substantial property damage.
  - The Combination boiler which has gas control system components must be protected from any possible danger during operation and service.
  - If new Combination boiler replaces an existing appliance, check and correct system problems, for example:
  - Do not install if: System leaks causing oxygen corrosion or heat exchanger cracks from hard water deposits.
- Provide clearances
  - If the heater was installed in a narrow space or corner, please ensure that there is sufficient space for service and maintenance access. For regular maintenance, gas and water lines must be accessible.
- The boiler must be installed on a wall that can bear its weight.

### ⚠ WARNING

- CLEARANCES FOR SERVICE ACCESS
  - If you do not provide the minimum clearances shown, it might not be possible to service the boiler without removing it from the space.
  - Space must be provided with combustion / ventilation air openings correctly sized for all other appliances located in the same space as the boiler. The boiler cover must be securely fastened to prevent it from drawing air from the boiler room. This is particularly important if the boiler is in a room with other appliances. Failure to comply with the above warnings could result in substantial property damage, severe personal injury, or death.

## 4.2 Wall Mount Bracket

- **4.2.1 The installation height and location** for your FT depends on your installation scenario. With all clearances considered, and given adequate positioning for air supply and venting, you will need to determine the best position to mount the Wall Mount Bracket. The wall must be concrete, wood, or plywood over studs, and must be strong enough to hold the boiler!
- Start by familiarizing yourself to how the included Wall Mount Bracket hooks underneath the two Hangers that are attached to the back of the boiler. The 'hooks' of the Wall Mount Bracket will be **3"** from the Top of the boiler once the boiler is hung.
- Position the Wall Mount Bracket at the location that it will go, being sure that it is level, and then drill 4 holes (0.47"dia) with a 1/2" drill bit, into the wall through the Bracket.
- If mounting to a concrete wall, then use the concrete anchors. If onto wood or 5/8" (16 mm) plywood, then use the wood screws. Do not hang the FT onto sheetrock unless it is possible to fasten directly into the structural studs. If the included anchors do not suit your installation, you must use 'Field Supplied' anchors that are appropriate for the wall's construction.

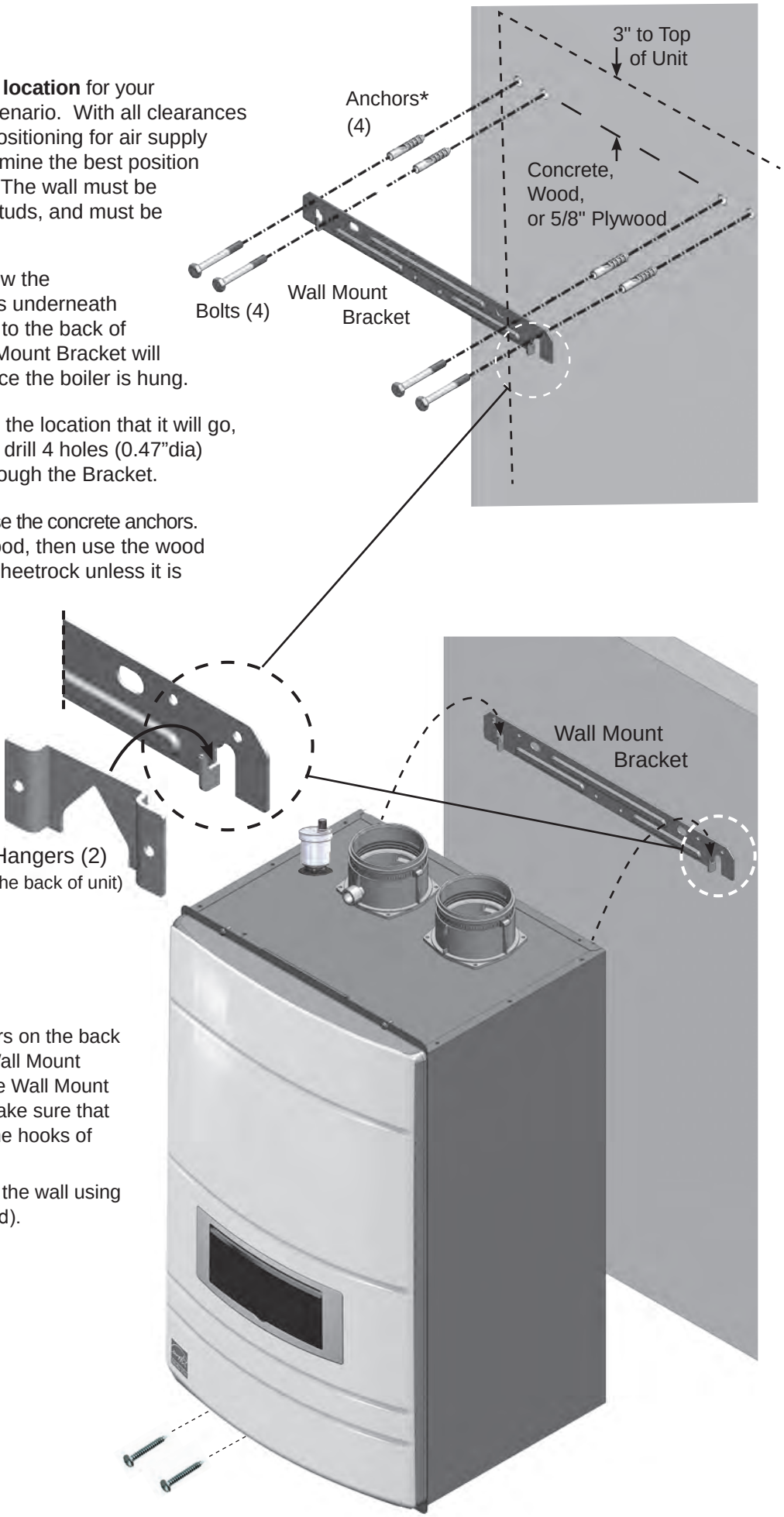


### 4.2.2 Hang the Boiler

- Lift the boiler up, align the Hangers on the back of the boiler with the hooks on the Wall Mount Bracket, and hang the boiler onto the Wall Mount Bracket. Do a visual inspection to make sure that the boiler is hanging properly onto the hooks of the Wall Mount Bracket.
- Fasten the bottom of the boiler to the wall using 2 suitable wall anchors (field supplied).

# SECTION 4.
# Installation (continued)

## 4.3 Combustion Air

FT boilers must have provisions for combustion and ventilation air in accordance with the applicable requirements for Combustion Air Supply and Ventilation in the National Fuel Gas Code, ANSI Z223 1; or in Canada, the Natural Gas and Propane Installation Code, CSA B149.1. All applicable provisions of local building codes must also be adhered to.

**A FT unit can take combustion air from the space in which it is installed, or the combustion air can be ducted directly to the unit. Ventilation air must be provided in either case.**

### 4.3.1 Combustion Air from Room

In the United States, the most common requirements specify that the space shall communicate with the outdoors in accordance with method 1 or 2, which follow. Where ducts are used, they shall be of the same cross-sectional area as the free area of the openings to which they connect.

**Method 1**: Two permanent openings, one commencing within 12” (300mm) of the top and one commencing within 12” (300mm) of the bottom, of the enclosure shall be provided. The openings shall communicate directly, or by ducts, with the outdoors or spaces that freely communicate with the outdoors. When directly communicating with the outdoors, or when communicating to the outdoors through vertical ducts, each opening shall have a minimum free area of 1 square inch per 4000 Btu/hr (550 square mm/kW) of total input rating of all equipment in the enclosure. When communicating to the outdoors through horizontal ducts, each opening shall have a minimum free area of not less than 1 square inch per 2000 Btu/hr (1100 square mm/kW) of total input rating of all equipment in the enclosure.

**Method 2**: One permanent opening, commencing within 12” (300mm) of the top of the enclosure, shall be permitted. The opening shall directly communicate with the outdoors or shall communicate through a vertical or horizontal duct to the outdoors or spaces that directly communicate with the outdoors and shall have a minimum free area of 1 square inch per 3000 Btu/hr (734 square mm/kW) of the total input rating of all equipment located in the enclosure. This opening must not be less than the sum of the areas of all vent connectors in the confined space.

Other methods of introducing combustion and ventilation air are acceptable, providing they conform to the requirements in the applicable codes listed above.

In Canada, consult local building and safety codes or, in absence of such requirements, follow CAN/CGA B149.1

### 4.3.2 Ducted Combustion Air

The combustion air can be taken through the wall, or through the roof. When taken from the wall, it must be taken from out-of-doors by means of the horizontal wall terminal. When taken from the roof, a field-supplied rain cap or an elbow arrangement must be used to prevent entry of rain water.

Use ABS, PVC, CPVC, polypropylene, or galvanized pipe for the combustion air intake. Route the intake to the boiler as directly as possible. Seal all joints. Provide adequate hangers. The unit must not support the weight of the combustion air intake pipe. Maximum linear pipe length allowed is shown in Table 6. Subtract 5 allowable linear ft. (1.5m) for every elbow used.

The connection for the intake air pipe is at the top of the unit.

In addition to air needed for combustion, air shall also be supplied for ventilation, including air required for comfort and proper working conditions for personnel.

**COMBUSTION AIR INSTALLATION STANDARDS**

| MATERIAL | UNITED STATES | CANADA |
|---|---|---|
| ABS | ANSI/ASTM D1527 | Air pipe material must be chosen CPVC, sch 40, ANSI/ASTM, Polypropylene based upon the intended application of the boiler. |
| PVC, sch 40 | ANSI/ASTM D1785 or D2665 | |
| CPVC, sch 40<br>Polypropylene | ANSI/ASTM F441<br>UL1738, ULC S636. | |
| Single wall galv. steel | 26 gauge | |

**Table 2. Required Combustion Air Pipe Material.**

### ⚠ NOTICE

The instructions for the installation of the venting system shall specify that the horizontal portions of the venting system shall be supported to prevent sagging; the methods of and intervals for support shall be specified. These instructions shall also specify that the venting system:

Category I, II and IV boilers must be installed so that horizontal sections have a slope of at least ¼ inch per foot (21 mm/m) to prevent accumulation of condensate; and
For Category II and IV boilers, where necessary, have means provided for drainage of condensate.

### ⚠ CAUTION

- The FT is standard as a Natural Gas Boiler and must be converted if propane is the desired gas, unless specifically manufactured for propane.

- Adequate drainage
  - The appliance should be installed not to damage the adjacent area. If such locations cannot be avoided, it is recommended that a suitable drain pan, adequately drained, be installed under the appliance. The pan must not block combustion air flow.

- Connecting the Water Supply
  - To conserve water and energy, insulate all water piping—especially the hot and recirculation water lines. Never cover the drain or pressure relief valve. Having a backflow preventer in the cold water supply line will prevent thermal expansion backflow. Contact the water supplier or local plumbing inspector for information about how to control this situation.

- If overheating occurs or the gas supply fails to shut off, turn off the manual gas valve.

- This installation must conform with below section
  - “Air for Combustion and Ventilation” of the National Fuel Gas Code, ANSI Z224.1/NFPA 54, or Sections 8.2, 8.3 or 8.4 of Natural Gas and Propane Installation Code, CAN/CSA B149.1, or applicable provisions of the local building codes.

### ⚠ AVIS

Les instructions d'installation du système d'évacuation doivent préciser que les sections horizontales doivent être supportées pour prévenir le fléchissement. Les méthodes et les intervalles de support doivent être spécifiés. Les instructions doivent aussi indiquer les renseignements suivants:

les chaudières de catégories I, II et IV doivent présenter des tronçons horizontaux dont la pente montante est d'au moins ¼ po par pied (21 mm/m) entre la chaudière et l'évent; les chaudières de catégories II et IV doivent être installées de façon à empêcher l'accumulation de condensat;

et si nécessaire, les chaudières de catégories II et IV doivent être pourvues de dispositifs d'évacuation du condensat.

## 4.4 Venting (Exhaust)

**⚠ NOTICE**

**DO NOT COMMON VENT FT UNITS.FT units are never permitted to share a vent with Category I appliances.**

**⚠ AVIS**

**NE PAS ÉVENT COMMUNE FT UNITÉS. FT unités ne sont jamais autorisés à partager un évent Catégorie I avec les appareils.**

**The flue temperature of the FT changes dramatically with changes in operating water temperature. Therefore, it is necessary to assess the application of the boiler to determine the required certified vent class. If the FT is installed in an application where the ambient temperature is elevated, and/or installed in a closet/alcove, CPVC, polypropylene, or stainless steel material is required. If the system temperatures are unknown at the time of installation, stainless, polypropylene or CPVC material is recommended.**

The FT is a Category IV appliance and may be installed with PVC, CPVC or polypropylene that complies with ULC-S636, ANSI/ASTM D1785 F441 (see Table 3) or a stainless steel venting system that complies with UL 1738 Standard and ULC S636.

**⚠ WARNING**

Use of cellular core PVC (ASTM F891), cellular core CPVC, or Radel® (polyphenolsulfone) in venting systems shall be prohibited.

**⚠ WARNING**

Failure to use the appropriate vent material, installation techniques, glues/sealants could lead to vent failure causing property damage, personal injury or death.

**⚠ WARNING**

All venting must be installed according to this manual and any other applicable local codes, including but not limited to, ANSI Z224.1/NFPA 54, CAN/CSA B149.1 and ULC-S636. Failure to follow this manual and applicable codes may lead to property damage, severe injury, or death.

**⚠ WARNING**

Use of cellular core PVC (ASTM F891), cellular core CPVC, or Radel® (polyphenolsulfone) in non-metallic venting systems is prohibited and that covering non-metallic vent pipe and fittings with thermal insulation is prohibited.

**INSTALLATIONS IN CANADA require the use of venting material certified to ULCS636. All Gas vents connected to the FT, plastic, stainless steel or otherwise must be certified to this ULC standard. Appropriate selection of vent material is very important for proper performance and safe operation of the FT.**
**The flue temperature of the FT changes dramatically with changes in operating water temperature. Therefore, it is necessary to assess the application of the boiler to determine the required certified vent class. If the FT is installed in an application where the outlet water temperature exceeds 145°F, and/or installed in a closet, class IIB or higher vent material is required. If the system temperatures are unknown at the time of installation, class IIB or higher venting material is recommended.**

**IN CANADA all venting used must meet the following requirements:**

1. **ULC-S636 certified and marked**
2. **The first 3 feet of venting must be accessible for visual inspection.**
3. **All components used in the vent system must be from a certified manufacturer.**

**VENTING INSTALLATION STANDARDS**

| MATERIAL | UNITED STATES | CANADA |
|---|---|---|
| Stainless Steel | UL 1738 | Venting must be ULC-S636 certified for use as venting material. The venting material must be chosen based upon the intended application of the boiler. |
| PVC, sch 40 | ANSI/ASTM D1785 | |
| CPVC, sch 40<br>Polypropylene | ANSI/ASTM F441<br>UL1738 or ULC-S636 | |

**Table 3. Required Exhaust Vent Material.**

4 . **Vent system components must not be mixed with alternate manufacturers certified components and/or unlisted components.**

5 . **The venting must be installed according to the vent manufacturers installation instructions.**

The unit's vent can terminate through the roof, or through an outside wall.

Vent pipe must pitch upward, toward the vent terminal, not less than 1/4" per foot, so that condensate will run back to the FT to drain. Route vent pipe to the heater as directly as possible. Seal all joints and provide adequate hangers as required in the venting system manufacturer's Installation Instructions. Horizontal portions of the venting system must be supported to prevent sagging and may not have any low sections that could trap condensate. The unit must not support the weight of the vent pipe.

⚠ WARNING

- Failure to vent this Boiler in accordance with these instructions could cause a fire, resulting in severe property damage, personal injury or death.
- Do not interchange vent systems or materials unless it is specified.
- The use of thermal insulation covering pipe and fittings is prohibited.
- Do not apply an electric damper, draft hood or vent damper with this Boiler.
- Do not locate vent termination where exposed to prevailing winds. Moisture and ice may fall on surface around vent termination. To prevent deterioration, surface must be in good repair (sealed, painted, etc.).

## 4.5 General Location Guideline

1. Vent system installation must be in accordance with Local codes or, in the absence of local codes, the National Fuel Gas Code, ANSI Z224.1 /NFPA 54 and/or CSA B149.1, Natural Gas and Propane Installation Code.

2. The Boiler is designed to be installed as a Direct Vent (sealed combustion) type. The air for combustion must be supplied directly from the outside to the burner. Also, the flue gases must be vented directly to the outdoors (through wall or roof).

3. Do not install venting system components on the exterior of building except as specifically required by these instructions

- Vent terminals must be at least 1 foot from any door, window, or gravity inlet into the building.
- Maintain the correct clearance and orientation between the vent and air intake terminals.
  The vent and air intake terminals must be at the same height and their center lines must be spaced apart 12″ minimum.
- The bottom of the vent and air intake terminal must be at least 12″ above the normal snow line. In no case should they be less than 12″ above grade level.
- Do not install the vent terminal directly over windows or doors.
- Air intake terminal must not terminate in areas that might contain combustion air contaminates, such as near swimming pools.
- For sidewall venting, the minimum horizontal distance between any adjacent individual Module (Boiler) vent terminations is twelve (12) inches. It is better to be far more than 12 inches for avoiding frost damage to building surfaces where vent terminations are placed.
- The minimum horizontal distance between any adjacent individual module (boiler) roof vent endpiece is one (1) foot.

## 4.6 Locations for Vent Pipe Terminator

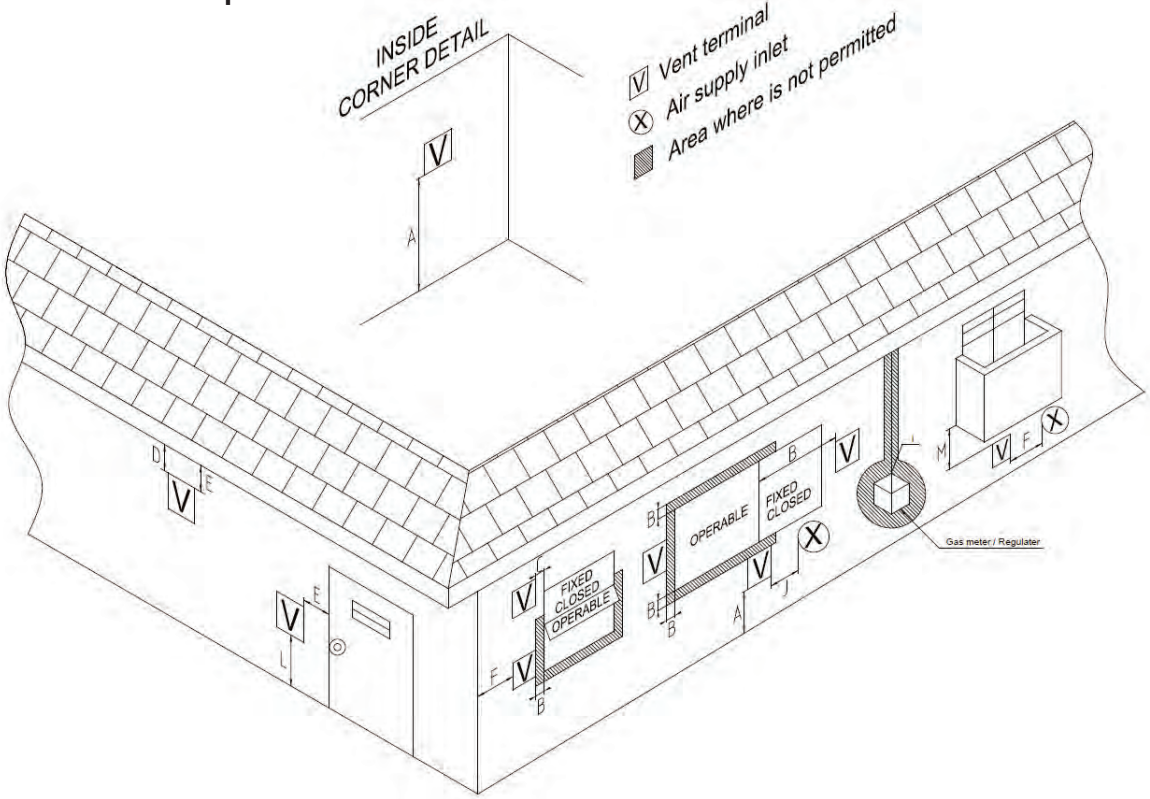


* For clearances not specified in ANSI Z224.1 / NFPA 54 or CAN/CSA-B 149.1, please use clearances in accordance with local installation codes and the requirement of the gas supplier.

### 4.6.1 Direct Venting Clearances

| | Description | US Direct Vent Installations | Canadian Direct Vent Installations |
|---|---|---|---|
| A | Clearance above grade, veranda, porch, deck, or balcony | 12 in (30 cm) | 12 in (30 cm) |
| B | Clearance to window or door that may be opening | 12 in (30 cm) | 36 in (91 cm) |
| C | Clearance to permanently closed window | * | * |
| D | Vertical clearance to ventilated soffit located above the terminal within a horizontal distance of 2 feet from the center line of the terminal | * | * |
| E | Clearance to unventilated soffit | * | * |
| F | Clearance to outside corner | * | * |
| G | Clearance to inside corner | * | * |
| H | Clearance to each side of center line extended above meter/ regulator assembly | * | 3 ft (91 cm) within a height 15 ft (457 cm) above the meter/ regulator assembly |
| I | Clearance to service regulator vent outlet | * | 3 ft (91 cm) |
| J | Clearance to non-mechanical air supply inlet to building or the combustion air inlet to any other appliance | 12 in (30 cm) | 36 in (91 cm) |
| K | Clearance to a mechanical air supply inlet | 3 ft (91 cm) above if within 10 ft (3 m) horizontally | 6 ft (1.83 m) |
| L | Clearance above paved sidewalk or paved driveway located on public property | * | 7 ft (2.13 m) |
| M | Clearance under veranda, porch, deck, or balcony | * | 12 in (30 cm) |

**Table 4. Direct Vent Clearances**

### 4.6.2 Non-Direct Venting (Single Pipe) Clearances

| | Description | US Non-Direct | Canadian Non-Direct |
|---|---|---|---|
| A | Clearance above grade, veranda, porch, deck, or balcony | 12 in (30 cm) | 12 in (30 cm) |
| B | Clearance to window or door that may be opening | 48 in (120 cm) below or to side of opening; 12 in (30 cm) above opening | 36 in (91 cm) |
| C | Clearance to permanently closed window | * | * |
| D | Vertical clearance to ventilated soffit located above the terminal within a horizontal distance of 2 feet from the center line of the terminal | * | * |
| E | Clearance to unventilated soffit | * | * |
| F | Clearance to outside corner | * | * |
| G | Clearance to inside corner | * | * |
| H | Clearance to each side of center line extended above meter/ regulator assembly | * | 36 in (91 cm) within a height 15 ft (4.57 m) above the meter/ regulator assembly |
| I | Clearance to service regulator vent outlet | * | 36 in (91 cm) |
| J | Clearance to non-mechanical air supply inlet to building or the combustion air inlet to any other appliance | 48 in (120 cm) below or to side of opening; 12 in (30 cm) above opening | 36 in (91 cm) |
| K | Clearance to a mechanical air supply inlet | 36 in (91 cm) above if within 10 ft (3 m) horizontally | 6 ft (1.83 m) |
| L | Clearance above paved sidewalk or paved driveway located on public property | * | 7 ft (2.13 m) |
| M | Clearance under veranda, porch, deck, or balcony | * | 12 in (30 cm) |

**Table 5. Non-Direct Vent Clearances**

### 4.6.3 Venting Requirements in the Commonwealth of Massachusetts

In Massachusetts the following items are required if the side-wall exhaust vent termination is less than seven (7) feet above finished grade in the area of the venting, including but not limited to decks and porches. From Massachusetts Rules and regulations 248 CMR 5.08

1. Installation of Carbon Monoxide Detectors

At the time of installation of the side wall vented gas fueled appliance, the installing plumber or gasfitter shall observe that a hard-wired carbon monoxide detector with an alarm battery back-up is installed on the floor level where the gas appliance is to be installed. In addition, the installing plumber or gasfitter shall observe that a battery operated or hard-wired carbon monoxide detector with an alarm is installed on each additional level of the dwelling, building or structure served by the side-wall horizontally vented gas fueled equipment. It shall be the responsibility of the property owner to secure the services of qualified licensed professionals for installation of hard-wired carbon monoxide detectors.

a. In the event that the side-wall horizontally vented gas fueled equipment is installed in a crawl space or an attic, the hard-wired carbon monoxide with alarm and battery back-up may be installed on the next adjacent floor level.

b. In the event that the requirements of the subdivision cannot be met at the time of completion of installation, the owner shall have a period of thirty (30) days to comply with the above requirements, provided, however, that during said thirty (30) day period, a battery operated carbon monoxide detector with an alarm be installed.

2. Approved Carbon Monoxide Detectors

Each carbon monoxide detector shall comply with NFPA 720 and be ANSI/UL 2034 listed and IAS certified.

3. Signage. A metal or plastic identification plate shall be permanently mounted to the exterior of the building at a minimum height of eight (8) feet above grade directly in line with the exhaust vent terminal for horizontally vented gas fueled heating appliance or equipment. The sign shall read, in print no less than one-half (1/2) inch in size: “GAS VENT DIRECTLY BELOW, KEEP CLEAR OF ALL OBSTRUCTIONS”.

4. Inspection The state or local gas inspector of the side-wall horizontally vented gas fueled appliance shall not approve the installation unless, upon inspection, the inspector observes carbon monoxide detectors and signage installed in accordance with the provisions of 248 CMR 5.08(2)(a) 1-4.

**⚠ NOTICE**

**<u>DO NOT COMMON VENT FT UNITS.</u>FT units are never permitted to share a vent with Category I appliances.**

**⚠ AVIS**

**<u>NE PAS ÉVENT COMMUNE FT UNITÉS</u>. FT unités ne sont jamais autorisés à partager un évent Catégorie I avec les appareils.**

## Common Vent Test

NOTE: This section does not describe a method for common venting FT units. It describes what must be done when an existing unit is **removed** from a common vent system.

**⚠ NOTICE**

At the time of removal of an existing boiler, the following steps shall be followed with each appliance remaining connected to the common venting system placed in operation, while the other appliances remaining connected to the common venting system are not in operation.

1. Seal any Not Used openings in the common venting system.
2. Visually inspect the venting system for proper size and horizontal pitch and determine there is no blockage or restriction, leakage, corrosion and other deficiencies which could cause an unsafe condition.
3. Insofar as is practical, close all building doors and windows and all doors between the space in which the appliances remaining connected to the common venting system are located and other spaces of the building. Turn on clothes dryers and any appliance not connected to the common venting system. Turn on any exhaust fans, such as range hoods and bathroom exhausts, so they will operate at maximum speed.
4. Place in operation the appliance being inspected. Follow the lighting instructions. Adjust thermostat so the appliance will operate continuously.
5. Operate the main burner for 5 minutes then, determine if the cut-draw overflows to the discharge opening. Use the flame of a match or a candle or the smoke of a cigarette, a cigar or a pipe
6. Once it has been determined, according to the method indicated above, that each device connected to the drainage system is placed in the open air in an adequate manner. Install the doors and windows, fans, the registers of chimneys and gas appliances to their original position
7. Any malfunction of the venting system should be corrected so that the installation conforms to the National Fuel Gas Code, ANSI Z223.1/NFPA 54 and (or) the installation codes CAN/CSA-B149.1. If the size of a section of the evacuation system must be changed, the system should be modified to comply with the minimum values of the relevant tables of appendix F of the National Fuel Gas Code, ANSI Z223.1/NFPA 54 and (or) the installation codes CAN/CSA-B149.1

**⚠ AVIS**

Au moment du retrait d'une chaudière existante, les mesures suivantes doivent être prises pour chaque appareil toujours raccordé au système d'évacuation commun et qui fonctionne alors que d'autres appareils toujours raccordés au système d'évacuation ne fonctionnent pas:

1. Sceller toutes les ouvertures non utilisées du système d'évacuation.
2. Inspecter de façon visuelle le système d'évacuation pour déterminer la grosseur et l'inclinaison horizontale qui conviennent et s'assurer que le système est exempt d'obstruction, d'étranglement, de fuite, de corrosion et autres défaillances qui pourraient présenter des risques.
3. Dans la mesure du possible, fermer toutes les portes et les fenêtres du bâtiment et toutes les portes entre l'espace où les appareils toujours raccordés au système d'évacuation sont installés et les autres espaces du bâtiment. Mettre en marche les sécheuses, tous les appareils non raccordés au système d'évacuation commun et tous les ventilateurs d'extraction comme les hottes de cuisinière et les ventilateurs des salles de bain. S'assurer que ces ventilateurs fonctionnent à la vitesse maximale. Ne pas faire fonctionner les ventilateurs d'été. Fermer les registres des cheminées.
4. Mettre l'appareil inspecté en marche. Suivre les instructions d'allumage. Régler le thermostat de façon que l'appareil fonctionne de façon continue.
5. Faire fonctionner le brûleur principal pendant 5 min ensuite, déterminer si le coupe-tirage déborde à l'ouverture de décharge. Utiliser la flamme d'une allumette ou d'une chandelle ou la fumée d'une cigarette, d'un cigare ou d'une pipe.
6. Une fois qu'il a été déterminé, selon la méthode indiquée ci-dessus, que chaque appareil raccordé au système d'évacuation est mis à l'air libre de façon adéquate. Remettre les portes et les fenêtres, les ventilateurs, les registres de cheminées et les appareils au gaz à leur position originale.
7. Tout mauvais fonctionnement du système d'évacuation commun devrait être corrigé de façon que l'installation soit conforme au National Fuel Gas Code, ANSI Z223.1/NFPA 54 et (ou) aux codes d'installation CAN/CSA-B149.1. Si la grosseur d'une section du système d'évacuation doit être modifiée, le système devrait être modifié pour respecter les valeurs minimales des tableaux pertinents de l'appendice F du National Fuel Gas Code, ANSI Z223.1/NFPA 54 et (ou) les codes d'installation CAN/CSA-B149.1

## 4.7 Air Supply and Vent Connections at the Appliance

### 4.7.1 Vent / Air Pipe Lengths

| Combination Boiler Model | 3″ Combustion Air / Vent Pipe | | 2″ Combustion Air / Vent Pipe | |
|---|---|---|---|---|
| | Max | Elbow Max | Max | Elbow Max |
| FTCW140/199 | 100′ (30M) | 6 | 50′* (15M*) | 4 |

**Table 6. Maximum Vent / Air Pipe Lengths for either 3” or 2 “ Pipes**

*Propane models are limited to 25 equivalent feet of 2” vent

NOTE : For additional elbows, reduce maximum allowable length
- 5 feet (1.5M) for each additional 3-inch 90-degree elbow
- 2.5 feet (0.75M) for each additional 3-inch 45-degree elbow
- 8 feet (2.4M) for each additional 2-inch 90-degree elbow
- 4 feet (1.2M) for each additional 2-inch 45-degree elbow
- The thickness of the wall vents installed : Min 4″ ~ Max 20″

NOTE: When using a 2” vent pipe, DIP Switch 4 must be in the OFF position.
For 3” Pipe vent, the default setting for DIP 4 is ON.
Refer to Section 4.19

### 4.7.2 Direct Venting

The boiler uses 3″ or 2″ diameter exhaust and 3″ or 2″diameter intake air ducts. To ensure the draw of air directly from and exhaust of air directly to the outside of the building, create an airtight seal from the boiler collar to the vent termination.

**(For installations in Canada)** field-supplied plastic vent piping must comply with CAN/CSA B149.1 (latest edition) and be certified by the Standard For Type BH Gas Venting Systems, ULC-S636. Components of this listed system must not be interchanged with other vent systems or unlisted pipes or fittings. All plastic components and specified primers and glues of the certified vent system must be from a single system manufacturer and must not be intermixed with another system manufacturer’s parts.

- **Tightening — Boiler Collar (Socket) to Vent Pipe & Inlet Pipe**
  - Clean and dry your selected PVC, CPVC vent pipe and boiler collar (socket).
  - You can select to the size of vent pipe(2″ & 3″), according to the installation conditions.
  - Push the pipe into the collar (socket) until it touches the bottom of the socket fitting.
  - For 2” installations, install a field supplied 3” to 2” adaptor. Adaptor must be installed in vertical section of piping only.

**3” pipe**

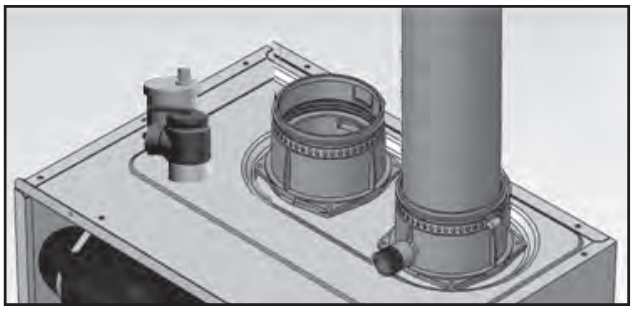

**2” pipe connected, using an adapter**

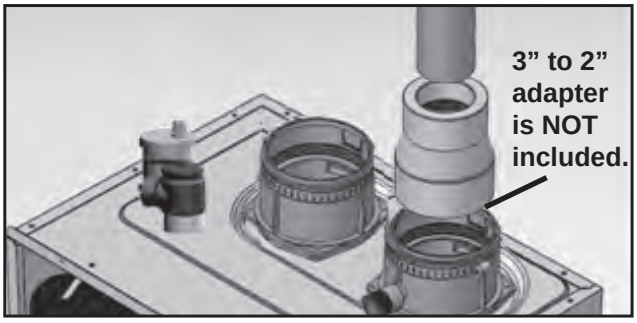


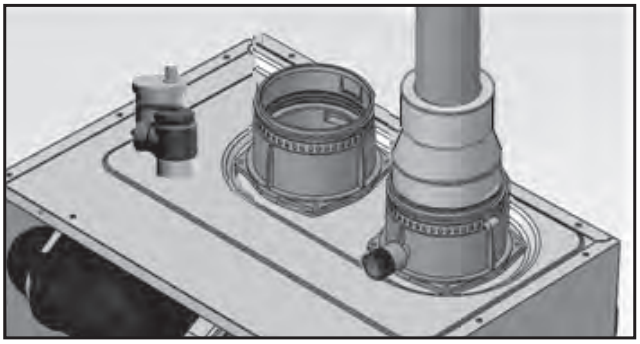

### 4.7.3 Indoor Combustion Air

Read and Follow Sections 4.3 Guidelines First.

1. Insert the termination end cap into the intake air duct.

2. Provide two openings to allow for circulation of combustion air as specified by ANSI Z224.1/NFPA 54. In Canada refer to CAN/CSA B-149.1

| Model | FTCW140 | FTCW199 |
|---|---|---|
| Maximum Input (BTU/H) | 140,000 | 199,000 |
| Indoor make up air is provided, a minimum free area of 1 in 2 per 1,000 BTU/H | 140 in2 13 1/4" (W) x 13 1/4" (H) | 199 in2 13 1/4" (W) x 13 1/4" (H) |

NOTE: The FT needs fresh air for safe operation and must be installed so there are provisions for adequate combustion and ventilation air.

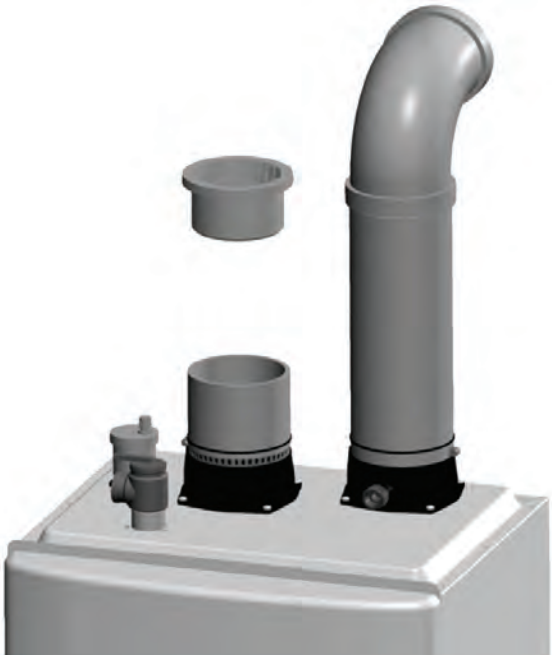

## 4.8 Vent / Air Pipe Termination

Note : For using pipe more than 1 elbow, reduce maximum allowable length

- 5 feet (1.5M) for each additional 3-inch 90-degree elbow
- 2.5 feet (0.75M) for each additional 3-inch 45-degree elbow
- 8 feet (2.4M) for each additional 2-inch 90-degree elbow
- 4 feet (1.2M) for each additional 2-inch 45-degree elbow
- The thickness of the wall vents installed : Min 4″ ~ Max 20″

Vent Termination

1. Rodent Screen Installation
   - Install Rodent Screen and Vent Terminal (additional purchase), see Figure for appropriate configuration.
   - After connecting vent/air inlet terminal, it is required to install screen for the terminal to prevent incoming of rodent, which might cause damage to the unit. (Extra purchase accessory 2/3″ screen vent 1/4″ mesh)

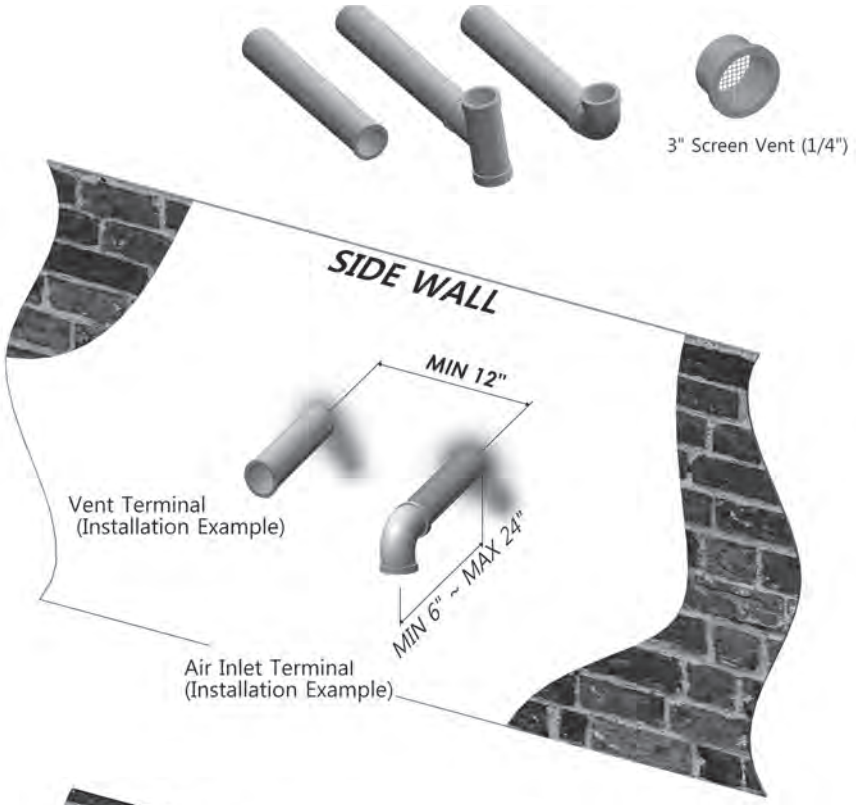


**Horizontal Vent Termination**

- Direct Vent - Sidewall Terminations

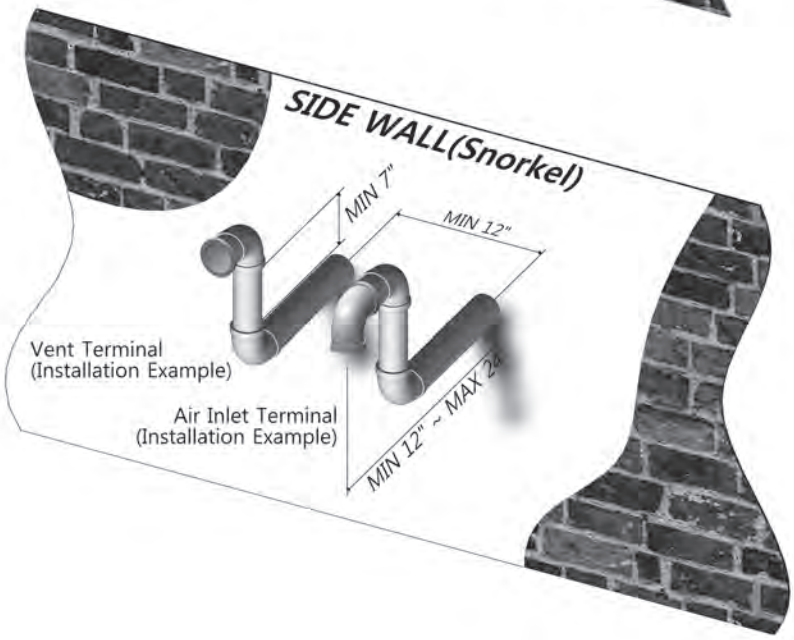


**Horizontal Vent Termination** (cont)

- Direct Vent - Optional Sidewall Snorkel Terminations

## 4.8 Vent Pipe Termination (cont)

### Vertical Vent Termination

- Direct Vent - Vertical Terminations with Sloped Roof

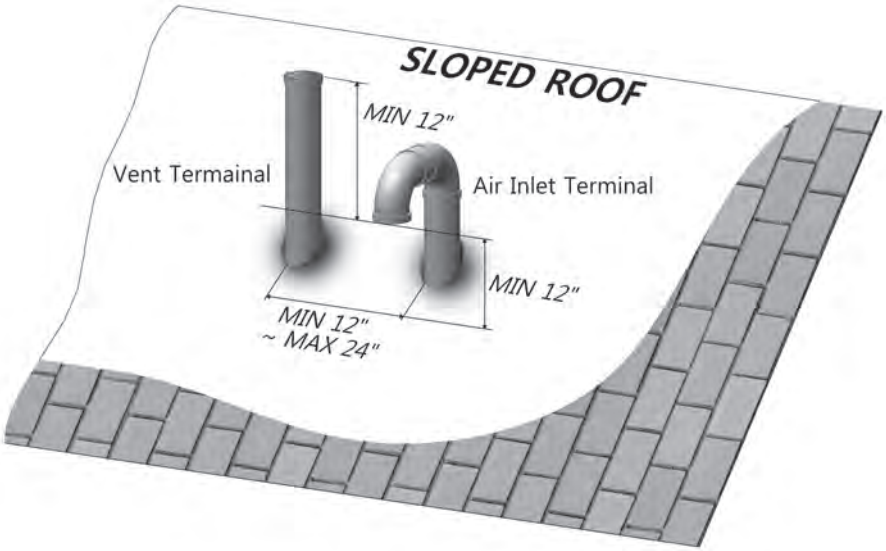


### Concentric Vent Termination

- Direct Vent - Optional Horizontal and Vertical Concentric Vent

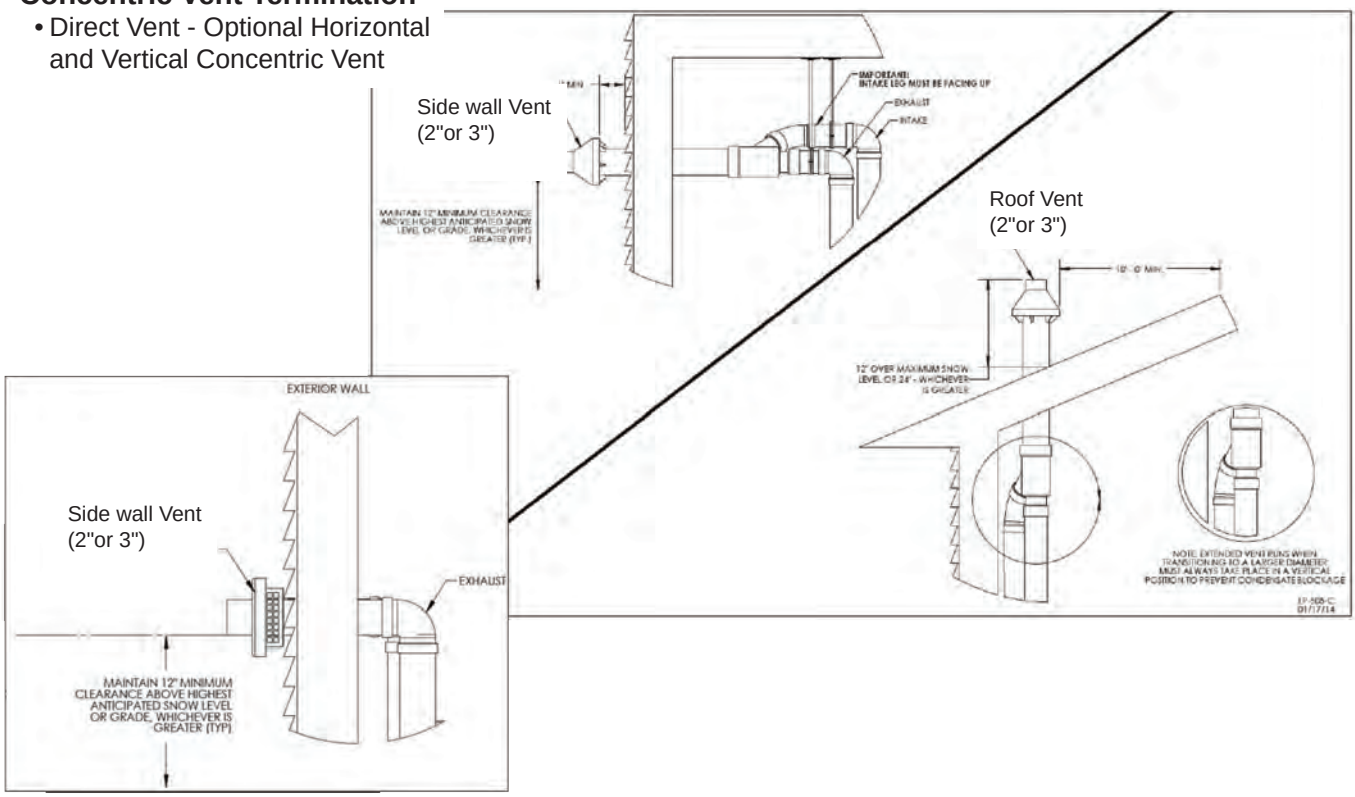

## 4.9 Gas Supply and Piping

Gas piping should be supported by suitable hangers or floor stands, not the appliance.

Review the following instructions before proceeding with the installation.

1. Verify that the appliance is fitted for the proper type of gas by checking the rating plate. FT will function properly at elevations up to 10,000 feet (3050 m). Refer to Section 4.12 for High Altitude Settings.
2. The maximum inlet gas pressure must not exceed 13" W.C. (3.2kPa). The minimum inlet gas pressure is 3.5" W.C. (1.0kPa).
3. Refer to Table 8, Table 7 and Table 9 to size piping.
4. Run gas supply line in accordance with all applicable codes.
5. Locate and install manual shutoff valves in accordance with state and local requirements.
6. A sediment trap must be provided upstream of the gas controls.
7. All threaded joints should be coated with piping compound resistant to action of liquefied petroleum gas.
8. The appliance and its individual shutoff valve must be disconnected from the gas supply piping during any pressure testing of that system at test pressures in excess of 1/2 PSIG (3.45kPa).
9. The unit must be isolated from the gas supply system by closing its individual manual shutoff valve during any pressure testing of the gas supply piping system at test pressures equal to or less than 1/2 PSIG (3.45kPa).
10. The appliance and its gas connection must be leak tested before placing it in operation.
11. Purge all air from gas lines.

**⚠ CAUTION**

PRV (included) must be installed immediately at the top of boiler outlet to PRV, with no valves between. Refer to Section 4.15

**⚠ ATTENTION**

PRV (inclus) doit être installé immédiatement en haut de la chaudière sortie de PRV, sans les vannes entre. Se reporter à la Section 4.15

**⚠ WARNING:**

Open flame can cause gas to ignite and result in property damage, severe injury, or loss of life.

**NOTE**: The FT appliance and all other gas appliances sharing the gas supply line must be firing at maximum capacity to properly measure the inlet supply pressure. The pressure can be measured at the supply pressure port on the gas valve. Low gas pressure could be an indication of an undersized gas meter, undersized gas supply lines and/or an obstructed gas supply line.

| SCHED 40 METAL PIPE CAPACITY FOR 1.50 SPECIFIC GRAVITY UNDILUTED PROPANE | | | |
|---|---|---|---|
| NOMINAL PIPE SIZE @ 11" W.C. INLET AND 0.5" W.C. PRESSURE DROP | | | |
| SIZE | 1/2" | 3/4" | 1" |
| LENGTH HOUR | MAXIMUM CAPACITY IN THOUSANDS OF BTU PER | | |
| 20 | 200 | 418 | 787 |
| 40 | 137 | 287 | 541 |
| 60 | - | 231 | 434 |
| 80 | - | 197 | 372 |
| 100 | - | 175 | 330 |

**NOTES:** 1. Follow all local and national propane gas codes for line sizing and equipment requirements. 2. Verify that inlet gas pressure remains between 4 and 13 inches of water column before and during operation.
*Source: ANSI Z223.1-80 National Fuel Gas Code.*

**Table 7. Nominal Pipe Size, Propane**

| SCH 40 METAL PIPE CAPACITY FOR 0.60 SPECIFIC GRAVITY NATURAL GAS | | |
|---|---|---|
| NOMINAL PIPE SIZE @ 0.30" W.C. PRESSURE DROP | | |
| LENGTH | 3/4" | 1" |
| FT | CUBIC FEET OF GAS PER HOUR | |
| 20 | 190 | 350 |
| 40 | 130 | 245 |
| 60 | 105 | 195 |
| 80 | 90 | 170 |
| 100 | | |

**Table 8. Nominal Pipe Size, Natural Gas**

| EQUIVALENT LENGTHS OF STRAIGHT PIPE FOR TYPICAL SCH 40 FITTINGS | | | |
|---|---|---|---|
| | NOMINAL PIPE SIZE | | |
| FITTING | 1/2" | 3/4" | 1" |
| | LINEAR FEET | | |
| 90° ELBOW | 3.6 | 4.4 | 5.2 |
| TEE | 4.2 | 5.3 | 6.6 |

**Table 9. Equivalent Pipe Lengths**

## 4.9 Gas Supply and Piping (cont)

- The gas connection fitting is,
**3/4" female NPT** on FTCW140 models
**3/4" female NPT** on FTCW199 models

- The supply line must be sized for the maximum output of the combination boiler model being installed. If there are additional gas appliances from the main supply line, you must measure sizes of the supply line according to the COMBINED total maximum BTUH draw for the appliances as if they were all operating at the same time.
- Measure the length of the gas supply line from the gas meter to the Combination boiler.
Use the tables in this manual or refer to the gas line manufacturers sizing information to determine the correct supply pipe size.
- The gas shut-off valve in the gas supply line should be installed close to the unit.
- To facilitate any future maintenance, it is also recommended that an approved gas union fitting be installed in the supply line between the shut-off valve and the 3/4″ female NPT connection on the Combination boiler.
  1) Install an approved gas line pipe to gas line connection under the Combination boiler. Include manual shut off valve and gas union connection, as shown.
  2) Test gas pressure to make sure it meets the minimum standards and does not exceed the maximum standards for the combination boiler.
  3) Leak test the gas line pipe before placing the unit in operation. Use approved leak detector liquid solutions only to check for leaks.
- Do Not Operate the combination boiler until all connections have been completed, checked for leaks, and the heat exchanger is filled with water.

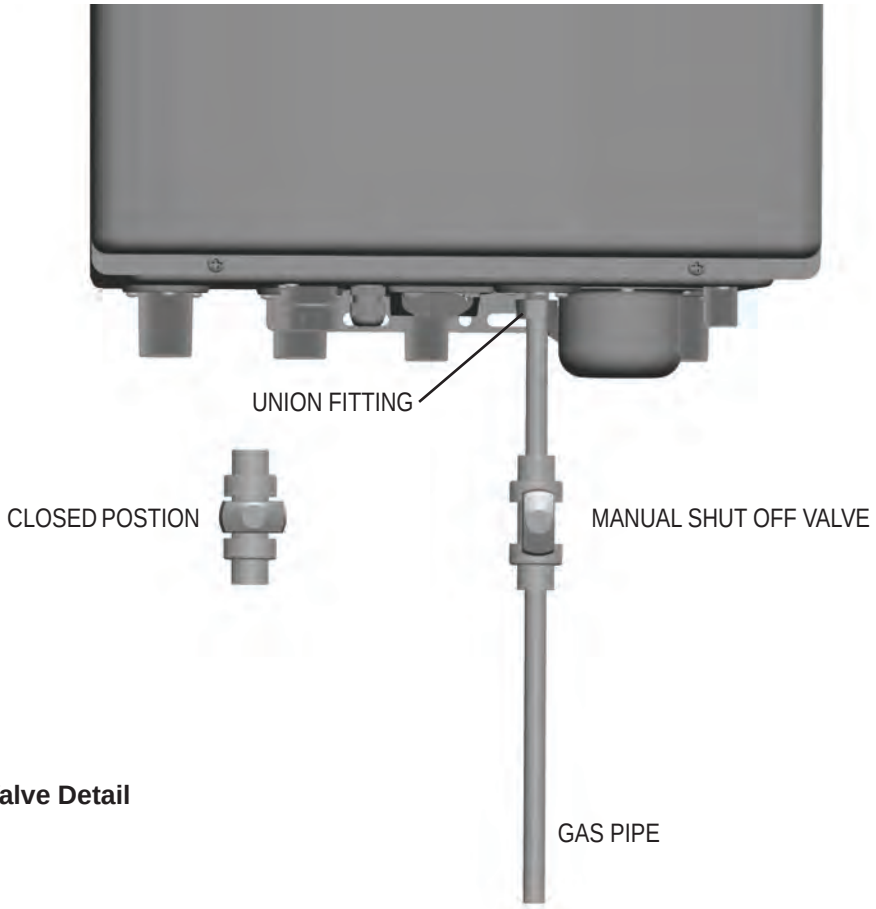


**Gas Line Valve Detail**

# SECTION 4. Installation

## 4.9 Gas Supply and Piping (cont)

**Suggested Natural Gas (NG) Layout**

Capacity : Not less than 'total capacity of connected appliances'

**Suggested Propane Gas (LP) Layout**

Capacity : not less than 'total capacity of connected appliances'

- The combination boiler must be installed downstream of the gas meter for adequate gas supply.
- The gas piping must not be less than **1/2”** for FTCW140 models and **3/4” female NPT** on FTCW199 models.

# SECTION 4. Installation

## 4.10 Gas Supply Pressure

Refer to the illustration.

Offset Adjustment.
Do Not Adjust without using a combustion analyzer to verify adjustment. Adjust ONLY when in MIN Fire and when using a combustion analyzer.
See Section 4.13 for step by step details.

Gas Outlet Pressure Port

Inlet Gas Pressure Port

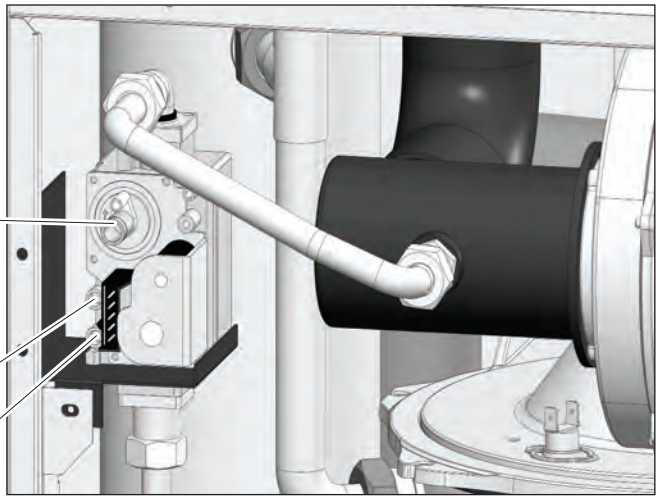

FTCW140

FTCW199

Gas Outlet Pressure Port

Inlet Gas Pressure Port

Offset Adjustment.
Do Not Adjust without using a combustion analyzer to verify adjustment. Adjust ONLY when in MIN Fire and when using a combustion analyzer.
See Section 4.13 for step by step details.

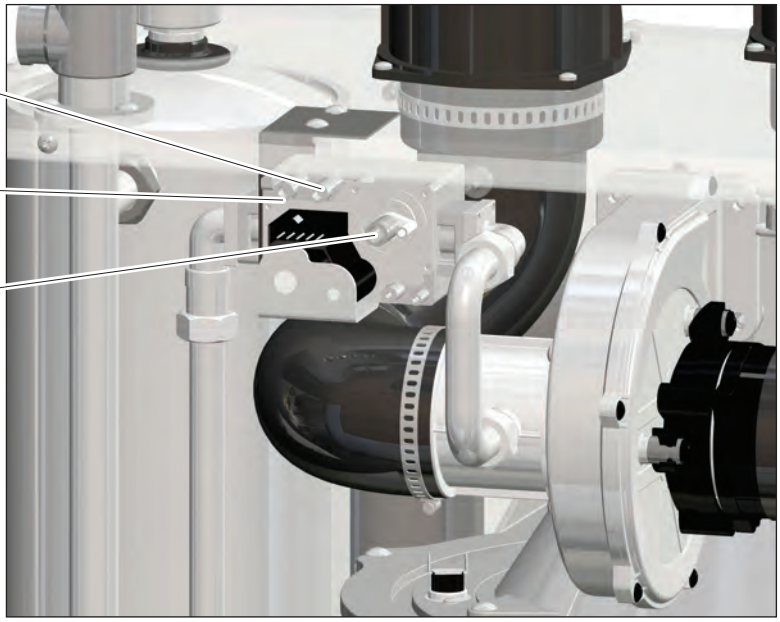

- The Maximum and Minimum gas line pressures must be

| LP Gas | | Natural Gas | |
|---|---|---|---|
| Maximum Pressure | 13.0" WC | Maximum Pressure | 10.5" WC |
| Minimum Pressure | 8.0" WC | Minimum Pressure | 3.5" WC |

**CAUTION**

- The appliance and its individual shut-off valve must be disconnected from the gas supply piping system during any pressure testing of the system at test pressures in excess of 1/2 psi (3.5 kPa).
- The appliance must be isolated from the gas supply piping system by closing its individual manual shutoff valve during any pressure testing of the gas supply piping system at test pressures equal to or less than 1/2 psi (3.5 kPa).
- Loosen the pressure port bolts before you check the gas inlet pressure.

# SECTION 4. Installation

## 4.11 Gas Setup and Adjustment

**For the Step by step process to measure $CO_2$ values on the FT Section 4.13 of this Installation Manual.**

**WARNING**

Installer is required to verify combustion settings as part of the installation process.

Standard Factory Setting is for MAX Fire. 9.0% CO2 @ 0-2,000 ft altitude (Natural Gas).

| $CO_2$ value | | Natural Gas (NG) | | Propane Gas (LP) | |
|---|---|---|---|---|---|
| | | 2″ VENT | 3″ VENT | 2″ VENT | 3″ VENT |
| FTCW (ALL Sizes) | MAX FIRE | 8.5 - 10.5% | | 9.5 - 11% | |
| | MIN FIRE | 8 - 10% | | 9 - 10.5 % | |

**Table 10. $CO_2$ Values**

| Manifold pressure | | 'NG' type combustibility | 'LP' type combustibility |
|---|---|---|---|
| | | 2"/3" VENT | 2"/3" VENT |
| FTCW140 | MAX FIRE | -0.216" WC | -0.216" WC |
| | MIN FIRE | 0.002" WC | 0.079" WC |
| FTCW199 | MAX FIRE | -0.314"WC | -0.173"WC |
| | MIN FIRE | -0.015"WC | -0.015"WC |

**Table 11. Manifold Pressures**

## 4.12 High Altitude Installations. 2,000' to 10,000'

The FT is shipped with a default factory setting for installation at an altitude of 0 to 2000' (approx). For maximum efficiencies at higher altitudes (2,000' to 10,000'), the FT does have an adjustment in the Installer Parameters Mode.

Follow these instructions if your installation is at 2,000' - 10,000'.

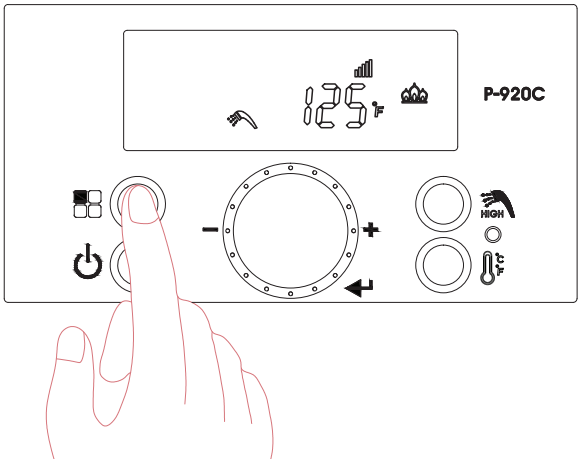


1. With the Power turned OFF, press the 'Modes button' for 5 seconds to get into the Installer Parameters Mode.

2. Turn the dial (E) until '**28:HA**' appears.

3. Press the dial (E).

4. Set the high altitude value by turning the dial. Refer to table.

| # | Altitude of Installation |
|---|---|
| 0 | 0~1999 ft (0~609 m) |
| 1 | 2,000~4,499 ft (610~1,645 m) |
| 2 | 4,500~7,699 ft (1,646~2,346 m) |
| 4 | 7,700~10,000 ft (2,347~3,048 m) |

5. Press the dial again (E) to save the setting.

6. Press the 'Modes button' for one second, to Save the number and to go back to initial status.

# SECTION 4. Installation

## 4.13 Natural Gas to Propane Conversion Kit Document #4288

### Kit # R20770

The FT Series, wall combi, condensing boiler is configured for Natural Gas (NG) from the factory. A Natural Gas to Propane Conversion Kit is included with every FT. The gas conversion kit will show you how to convert your FT boiler to propane gas. If your FT does not have the bag containing the conversion kit, a replacement kit can be obtained. Contact the manufacturer and request a replacement conversion kit.

**NOTICE**

If your installation altitude is greater than 2000 ft, check that the 'High Altitude' Installer Setting has been adjusted to suit your installation altitude. Refer to Section 4.12 of the Installation and Operation Instructions (Document 1318).

**WARNING**

This gas conversion kit shall be installed by a qualified service agency in accordance with the manufacturer's instructions and all applicable codes and requirements of the authority having jurisdiction. The information in these instructions must be followed to minimize the risk of fire or explosion or to prevent property damage, personal injury or death. The qualified service agency is responsible for the proper installation of this kit. The installation is not proper and complete until the operation of the converted appliance is checked as specified in the manufacturer's instructions supplied with the kit.Installation must conform to local codes and the latest edition of the National Fuel Gas Code, ANSI Z223.1 and CAN-B149.1. Failure to follow instructions could result in serious injury or property damage. The qualified agency performing this work assumes responsibility for gas conversion.

**CAUTION**

This combination boiler has already been set to burn natural gas, but can be converted to burn LP gas. Before placing the combination boiler into operation, verify that the type of gas supplied to your combination boiler.

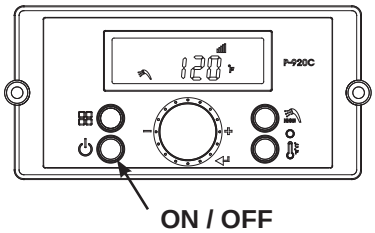

### Steps 1 thru 25

1. Turn **OFF** the FT. The **ON / OFF** button ⏻ is located at the bottom left of the Control Display.
2. Turn **OFF** the GAS and WATER supply to the FT (valves are located on the plumbing pipes.)
3. Using a Phillips screwdriver, remove the 4 screws on the front cover. See Figure A.
4. Locate the Gas Inlet Pipe at the top left of the unit as shown in Figure A, and loosen the Brass Fittings at both ends of the Gas Inlet Pipe.
5. Completely unthread the brass fitting on the blower end of the Gas Inlet Pipe and then carefully swing the Gas Inlet Pipe to the left or right, just enough so that it is out of the way. See Figure B.
6. Remove the existing natural gas nozzle or orifice. If your unit is a 199, note that the flat side of the orifice is towards the blower. Save the packing for re-use. See Figure C.
7. Install the new LP (propane) nozzle or orifice. Re-use the packing from previous.
8. Return the Gas Inlet Pipe to its original position and tighten both of the brass fittings.

| Model | Natural Gas (NG) part # | Propane Gas (LP) part # | |
|---|---|---|---|
| FTCW140 | FT1412N | FT1412P | Nozzle |
| FTCW199 | FT1780 | FT1802 | Orifice |

**Table A. Gas Conversion Parts**

# SECTION 4. Installation

## 4.13 Natural Gas to Propane Conversion

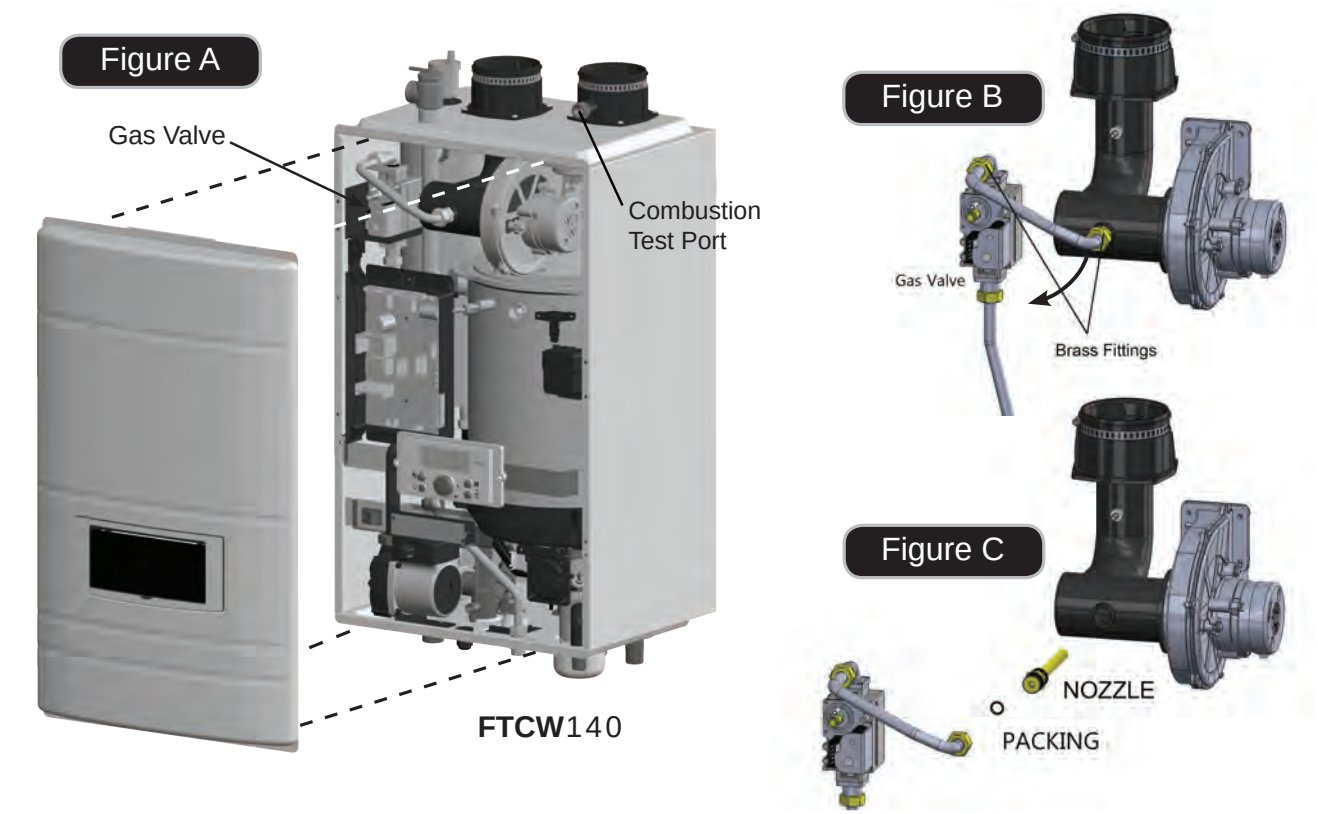


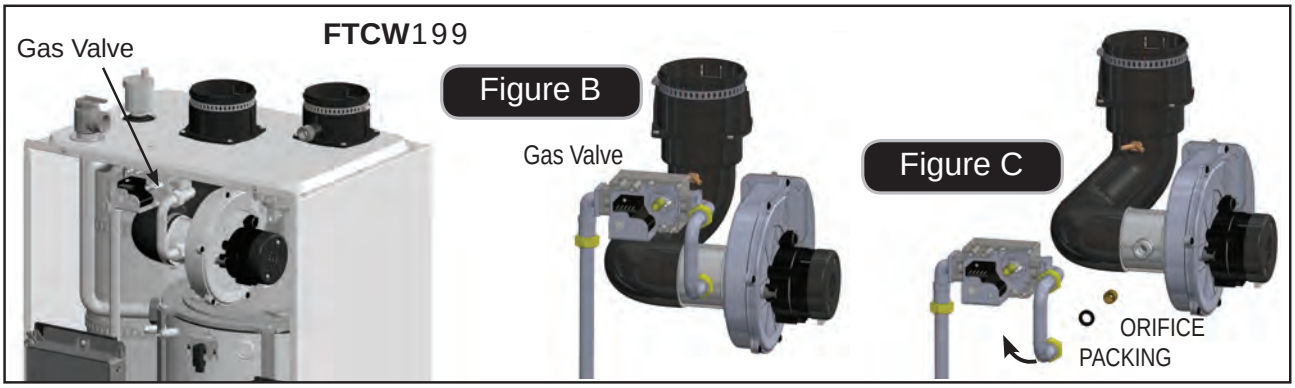


### ⚠ WARNING

This conversion shall be installed by a qualified service agency in accordance with the manufacturer's instructions and all applicable codes and requirements of the authority having jurisdiction. If the information in these instructions is not followed exactly, a fire, an explosion or production of carbon monoxide may result causing property damage, personal injury or loss of life. The qualified service agency is responsible for the proper and complete installation of this kit. The installation is not proper and complete until the operation of the converted appliance is checked as specified in the manufacturer's instruction supplied with the kit.

### ⚠ AVERTISSEMENT

Ce conversion doit être installé par un organisme de service conformément aux instructions du fabricant et tous les codes et les exigences de l'autorité compétente. Si les informations contenues dans ces instructions n'est pas suivi à la lettre, un incendie, une explosion ou de la production de monoxyde de carbone mais résultat causant des dommages matériels, des blessures ou des pertes de vie. Le service est responsable pour la bonne et complète l'installation de ce kit. L'installation n'est pas correcte et complète jusqu'à ce que le fonctionnement de l'appareil converti est vérifiée comme spécifié dans le manuel d'instruction fourni avec le kit.

# SECTION 4. Installation

## 4.13 Natural Gas to Propane Conversion

| ON | OFF |
|---|---|
| **MIN** Fire | Normal Operation |
| **MAX** Fire | Normal Operation |
| NG Natural | LP Propane |
| 3" Vent Size | 2" Vent Size |

| | | | | |
|---|---|---|---|---|
| | ON | OFF | ON | ON |
| | ON | OFF | OFF | ON |
| | OFF | ON | ON | ON |
| MBH | N/A | 140 | N/A | 199 |

REFERENCE ONLY. DO NOT CHANGE

**Table B** DIP Switch Settings

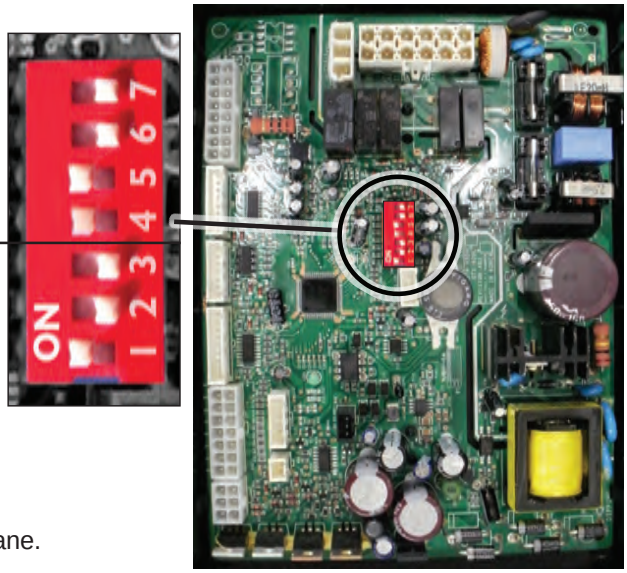


Figure D

9. Per **Table B**, set DIP Switch **5 to OFF** for LP Propane.
10. Turn **ON** the GAS and WATER supply to the FT.
11. Turn **ON** the FT.
12. Connect a manometer to the manifold pressure port. For dual port manometers, use the positive pressure side. Check for proper manifold gas pressure. Refer to Table D.
13. Establish a call for heat. You may need to disconnect the outdoor reset if you are making this gas conversion during warm weather.
14. Setup your combustion analyser and place the sensor into the combustion test port
15. Per **Table B for Max Fire**, change dip switch 6 to ON and 7 to OFF. The unit will cycle up to MAX fire.
16. WAIT for your combustion analyser to stabilize. This may take up to 3 minutes depending on your combustion analyser. Then check the $CO_2$ measurement for MAX fire. Refer to Table C for acceptable MAX fire combustion readings Do NOT attempt to adjust CO2 at MAX Fire. ONLY in MIN Fire, so...
17. Per **Table B for MIN Fire**, change dip switch 6 to OFF and 7 to ON. The unit will cycle down to MIN Fire.
18. WAIT for your combustion analyser to stabilize. Then check the $CO_2$ measurement for MIN fire. Refer to Table C for acceptable MIN fire combustion readings
19. Open the Gas Valve Adjustment Port by removing the cap screw with a 4mm Allen wrench.
20. Then use the 4 mm Allen wrench to make a minor adjustment (1/8 turn) to either increase or decrease $CO_2$.

**FTCW**140

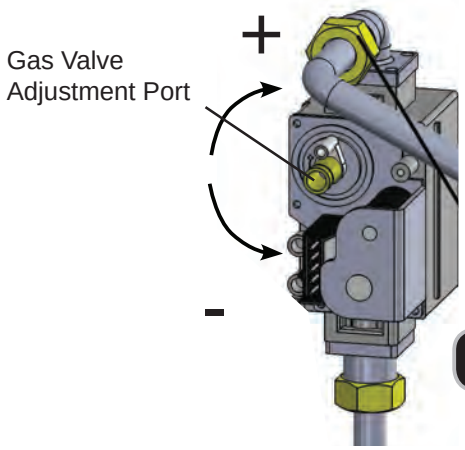


Figure E

**FTCW**199

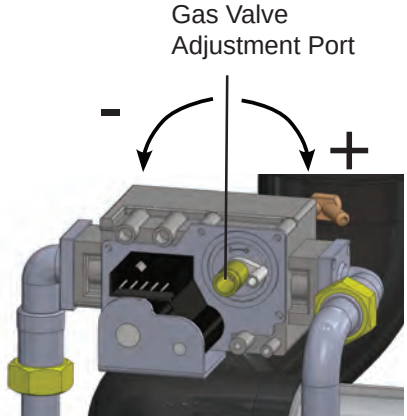

# SECTION 4. Installation

## 4.13 Natural Gas to Propane Conversion

NOTE: Installer is required to verify combustion settings as part of the installation process.
CO should not exceed 200 ppm.

| $CO_2$ value | | Natural Gas (NG) | | Propane Gas (LP) | |
|---|---|---|---|---|---|
| | | 2″ VENT | 3″ VENT | 2″ VENT | 3″ VENT |
| FTCW (ALL Sizes) | MAX FIRE | 8.5 - 10.5% | | 9.5 - 11% | |
| | MIN FIRE | 8 - 10% | | 9 - 10.5 % | |

**Table C**

| Manifold pressure | | 'NG' type combustibility | 'LP' type combustibility |
|---|---|---|---|
| | | 2"/3" VENT | 2"/3" VENT |
| FTCW140 | MAX FIRE | -0.216" WC | -0.216" WC |
| | MIN FIRE | 0.002" WC | 0.079" WC |
| FTCW199 | MAX FIRE | -0.314"WC | -0.173"WC |
| | MIN FIRE | -0.015"WC | -0.015"WC |

**Table D**

21. It may be necessary to go back and forth between HI Fire and LOW Fire several times (and making adjustments only at LOW Fire), before $CO_2$ at both are within acceptable levels. Be sure to put the adjustment port cap screw back onto the valve when done.

22. Once the $CO_2$ and manifold pressure measurements for both MIN and MAX Fire are acceptable per Table C, set DIP switches 6 and 7 to the OFF position for Nominal Fire (normal operation).

23. Write in the correct Conversion Date and the Technicians Name to the included gas conversion sticker. See Figure F. Then apply that sticker adjacent to the rating plate.

24. Remove your combustion analyser from the Test Port and be sure to thread the Test Port plug back into position.

25. Re-connect outdoor reset if it was disconnected, put the boiler cover back on and assemble/tighten the 4 screws that hold the cover in place.

This unit was converted on ____/____/___to _____gas
with kit #_____by_____
(name and company _____
accountable)_____
_____
Cette unité a été converti ____/____/____ten _____gaz
en utilisant le kit numéro _____ par_____
(nom et société_____
responsable)_____
_____

Figure F (Conversion label)

# SECTION 4. Installation

## 4.14 Plumbing Guidelines

■ External Plumbing and Water Connection Guidelines

- Ensure pipe material meets local codes and industry standards.
- The pipe end must be clean and free of debris.
- Do not apply torch heat within 12″ of the bottom connections of the unit.
- The size of the DHW pipe should be 3/4″ diameter and central heating water pipe should be 1″ diameter.
- Isolation valves(Shutoff valve) will be used.
- All piping should be insulated.

■ Applicable Backflow Preventer

- Apply a backflow preventer valve in the DHW supply inlet (water Inlet) to the unit as required by local codes.

**⚠ CAUTION**

■ Use at least the MINIMUM pipe size for the entire boiler loop piping (connecting boiler to and from the primary/secondary connection). Use only primary/secondary piping as shown.
Failure to follow these guidelines could result in system problems.

■ CH pipe minimum size : 1″

■ DWH pipe minimum size : 3/4″

| | |
|---|---|
| | Expansion tank (Diaphragm-type) |
| | Automatic air vent |
| | Air separator |
| | Circulation pump |
| | Check valve |
| | Drain valve |
| | Gate valve |
| | Backflow preventer |
| | Pressure Relief Valve |
| | Anti-scald rated Mixing Valve |

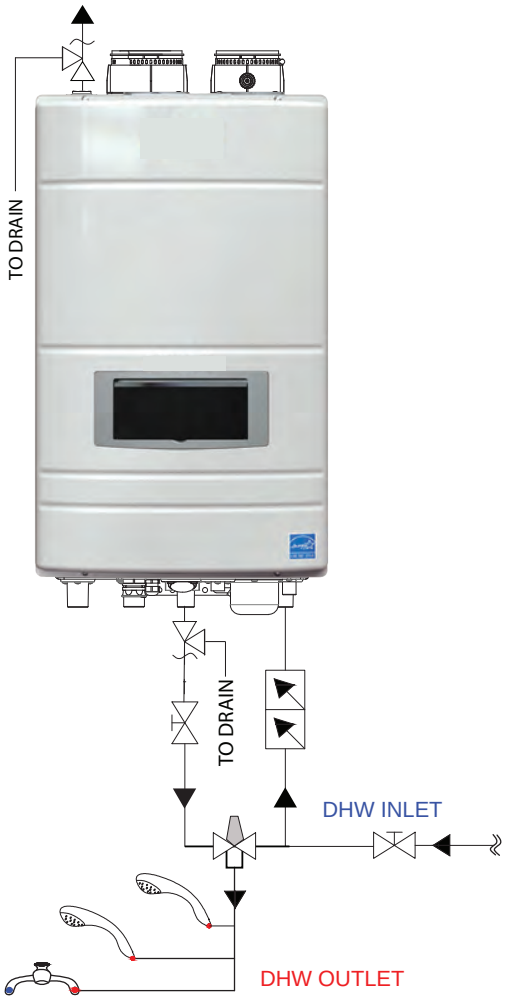

# SECTION 4. Installation

## 4.14 Plumbing Guidelines

- Zoning with circulation pump

  - Each heating zone of a pump based system has its own circulator pump which runs when the zone needs it.
  - Each zone thermostat goes to a controller which controls the pumps..

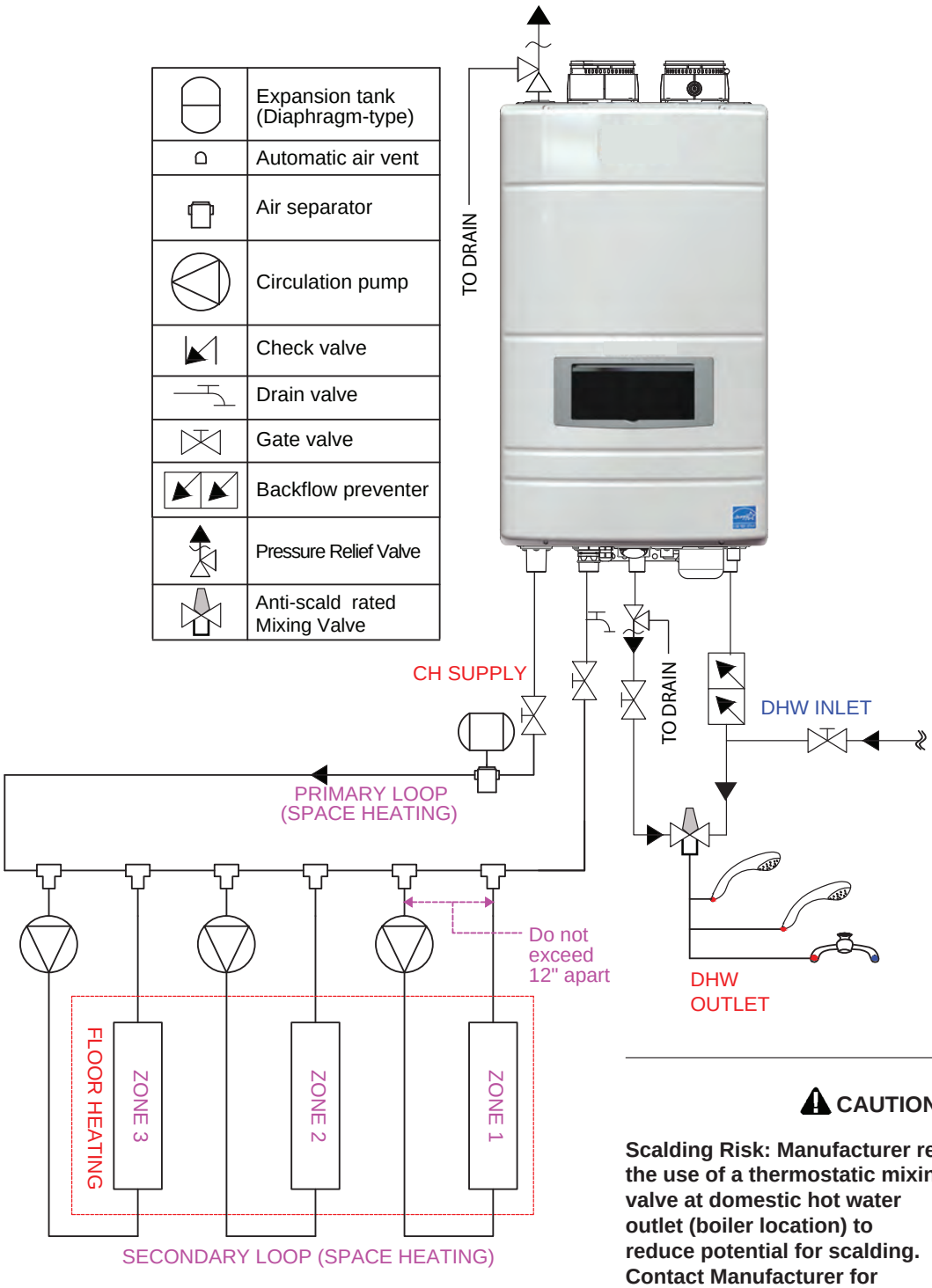


**⚠ CAUTION**

**Scalding Risk: Manufacturer recommends the use of a thermostatic mixing valve at domestic hot water outlet (boiler location) to reduce potential for scalding. Contact Manufacturer for recommended models.**

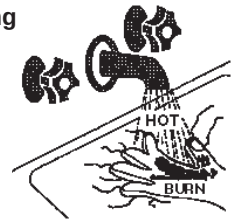

# SECTION 4. Installation

## 4.14 Plumbing Guidelines

- Zoning with zone valve

  - In a valve based system, there is one circulator pump at the boiler and each heating zone has a zone valve which opens when the zone.
  - Each thermostat is wired directly to the corresponding zone valve. Contacts in the zone valves provide a proper signal to the boiler when the valve is opened.

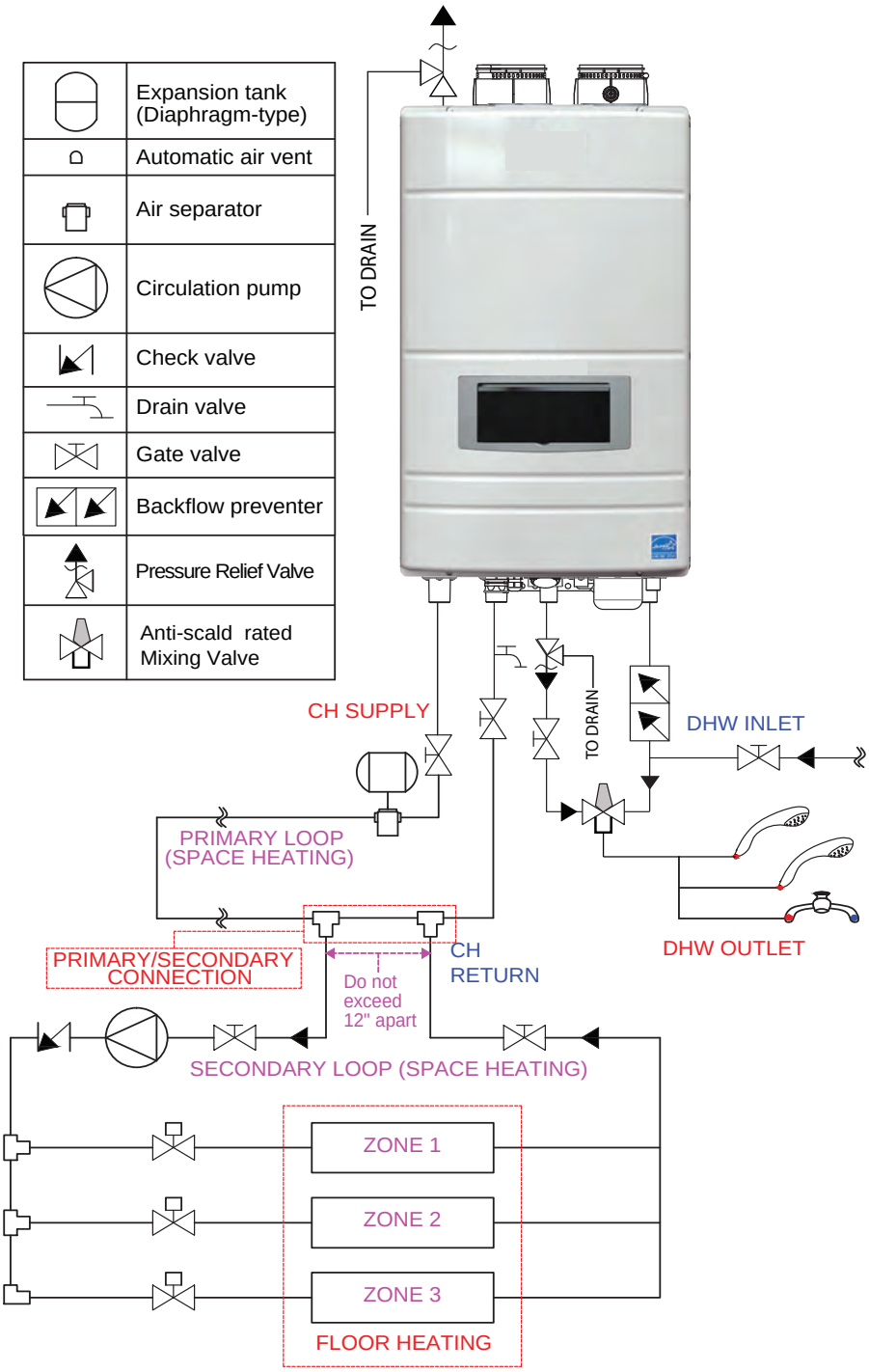

# SECTION 4. Installation

## 4.15 Pressure Relief Valve

- External pressure relief valves must be installed. Observe the following. Failure to comply with the guidelines on installing the pressure relief valve and discharge piping can result in personal injury, death or substantial property damage.

**WARNING**

Do not operate this appliance before the pressure relief valve supplied is installed with sufficient relieving capacity in accordance with the ASME Rating Plate on the boiler.

- This hot water boiler is provided with 30 psi safety relief valve that complies with the ANSI/ASME Boiler and Pressure Vessel Code, Section IV ("Heating Boilers). (Model : CASE ACME F-82)
- This safety relief valve (30 psi) is shipped loose for field installation.
- An approved ASME HV Pressure Relief Valve must be installed on the DHW supply line as close to the unit as possible. Valve size 3/4", maximum 150 psi. Not included with boiler.
- For safety, the relief valve(s) must be installed into it's designed location and not be removed or plugged. Failure to comply with the guidelines on installing the pressure relief valves and discharge piping can result in personal injury, death or substantial property damage.
- Direct the discharge piping of the pressure relief valve so that hot water will not splash on anyone or any nearby equipment. Attach the discharge line to the pressure relief valve and run the end of the line within 6-12″ (150-300mm) of the floor.

**WARNING**

- DO NOT install a CH pipe line relief valve with a pressure higher than 30psi and DHW pipe line relief valve with a pressure higher than 150psi. This is the maximum allowable relief valve setting for the combination boiler.

- Test the operation of the valve after filling and pressurizing system by lifting the lever. Make sure the valve discharges freely. If the valve fails to operate correctly, replace it with a new relief valve. Ensure that the discharge capacity of the pressure relief valve is equal to or greater than the maximum pressure rating of the combination boiler.
- Ensure that the maximum BTU/H rating on the pressure relief valve is equal to or greater than the maximum input BTU/H rating of the combination boiler.
- Pressure Relief Valve must be installed on the CH supply line & DHW outlet line as close to the unit as possible. (CH supply line: maximum 30psi, DHW outlet line : maximum 150psi). No other valves should be placed between the pressure relief valve and the appliance.
- This appliance has a high-temperature shut off switch built in as a standard safety feature .Therefore a "pressure only" relief valve is required.

3/4" 30psi Relief Valve

# SECTION 4. Installation

## 4.16 Disposal of Condensate

- High efficiency gas condensing Boilers create condensation when operating. Condensation has acidic (pH) of approximately 4-5.

- Condensate must be drained in accordance with all local regulations. Follow your local code with regards to the disposal of condensation.
  **One of 4 disposal methods must be followed**
  1. **to floor drain**
  2. **to neutralizer (optional kit)**
  3. **to laundry tub**
  4. **to condensate pump (field supplied)**

- If a neutralizer is installed, periodic replacement of the lime stone (or neutralizing agent) will be required. The rate of depletion of the lime stone varies upon usage of the boiler. During the first year of operation, please check the neutralizer every few months for depletion.

- Apply only corrosion-resistant materials for the condensate drain lines such as 1/2″ PVC, CPVC, Polypropylene pipe or included plastic hose.

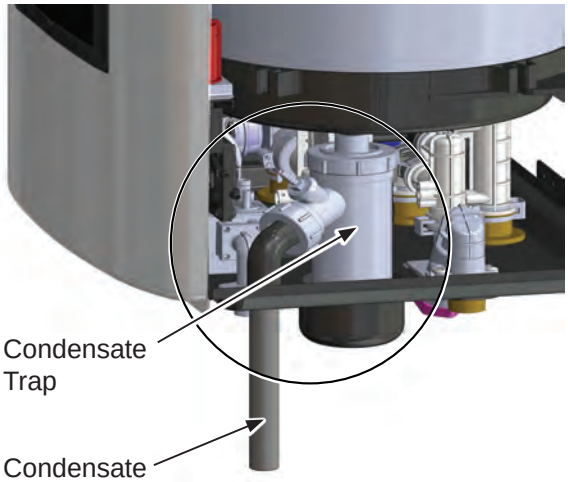


(View is as if side panel were removed)

**⚠ NOTICE**

For Category II and IV boilers, be installed so as to prevent accumulation of condensate; and

For Category II and IV boilers, where necessary, have means provided for drainage of condensate.

**⚠ AVIS**

les chaudières de catégories II et IV doivent être installées de façon à empêcher l'accumulation de condensat; et

si nécessaire, les chaudières de catégories II et IV doivent être pourvues de dispositifs d'évacuation du condensat.

**⚠ CAUTION**

Condensate is mildly acidic (pH=5), and may harm some floor drains and/or pipes, particularly those that are metal. Ensure that the drain, drainpipe, and anything that will come in contact with the condensate can withstand the acidity, or neutralize the condensate before disposal. **Damage caused by failure to install a neutralizer kit or to adequately treat condensate will not be the manufacturer's responsibility.**

**Contact Manufacturer to order**
**Neutralizer Kit# A2123601**

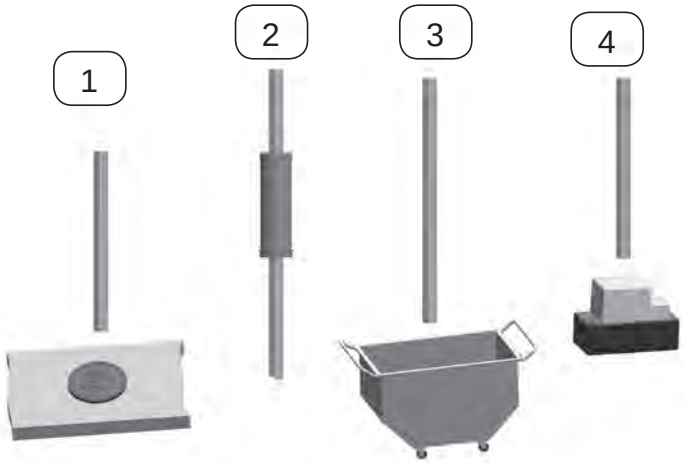

# SECTION 4. Installation

## 4.17 DHW Flow Restrictors are Factory Installed

Rated at 3.2 GPM for the model 140 and 7.0 GPM for the model 199, both of these factory installed restrictors are white in color. For the 140, an additional flow restrictor, rated at 4.5 GPM, is blue in color and is packaged with the Product Accessories. See Section 1.

If 3.2 GPM is not sufficient for your model 140 installation, replace the factory installed white flow restrictor with the blue flow restrictor by following these instructions.

To replace the Flow Restrictor.

1. Being sure that the unit is completely shut off and drained, locate the DHW inlet adapter on the bottom of the appliance.
2. Pull the two pins to release the DHW inlet filter. See Illustration. The flow restrictor is attached to the top of the filter assembly.
3. Remove the installed white flow restrictor and replace it with the blue flow restrictor included with the Product Accessories.
4. Reinstall the DHW inlet filter.
5. Re-insert the two pins.
6. Refill and restart your FT as per the Installation Instructions.

**⚠ WARNING**

If the appliance has been filled and operational, then the gas, water and power must be completely shut off, and the unit must be drained before proceeding with this instruction. See Section 8 of this installation book.

Failure to do so could result in substantial property damage, sever personal injury, or death.

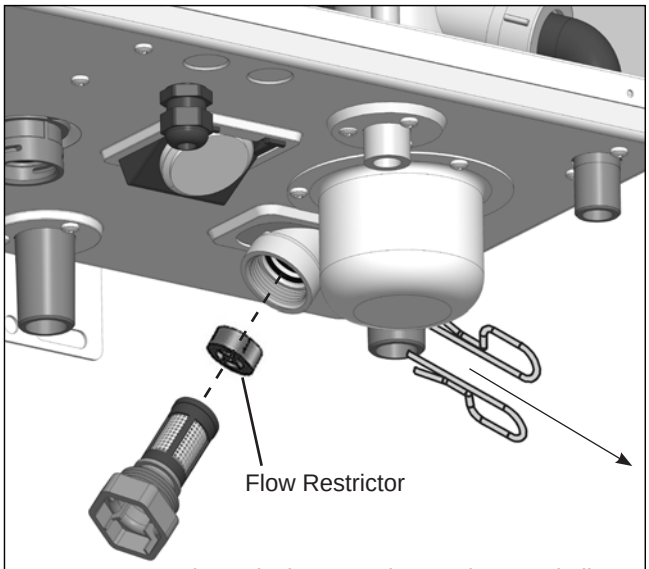


Shown is the 140. The 199 is very similar.

**Performance Graph**

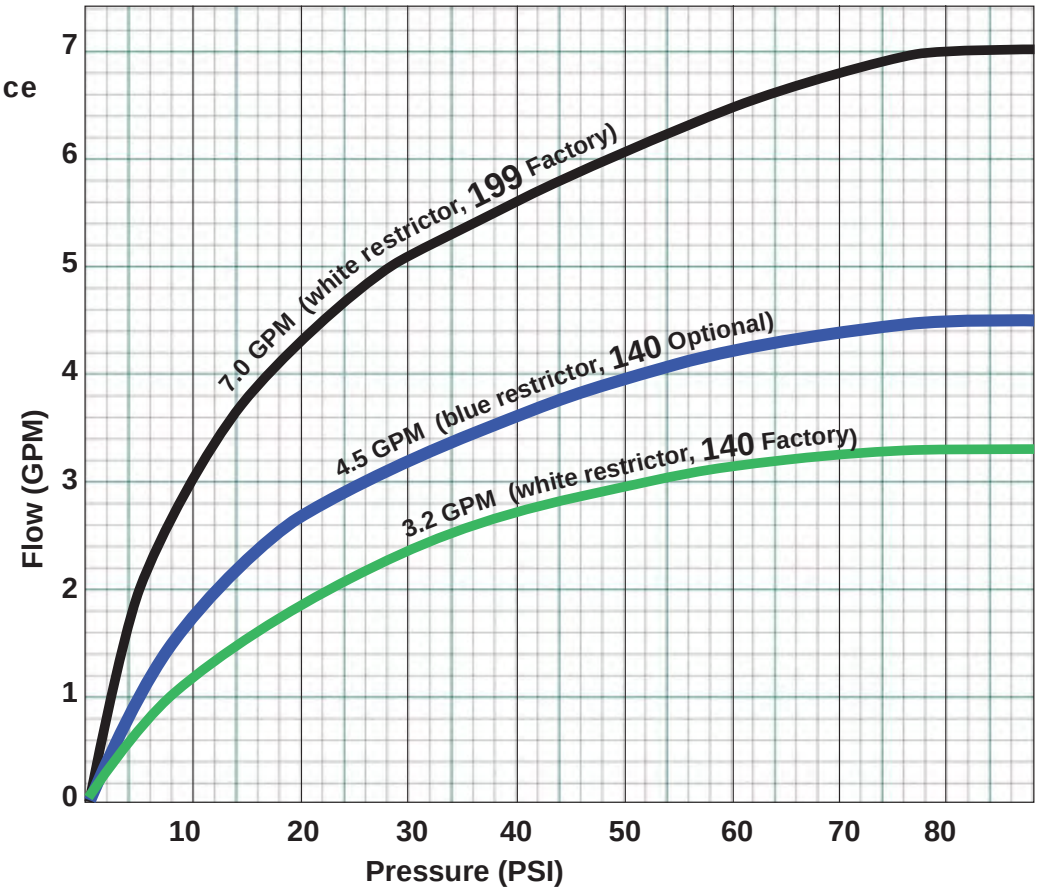

# SECTION 4. Installation

## 4.18 Electrical Wiring Connections

### FTCW140

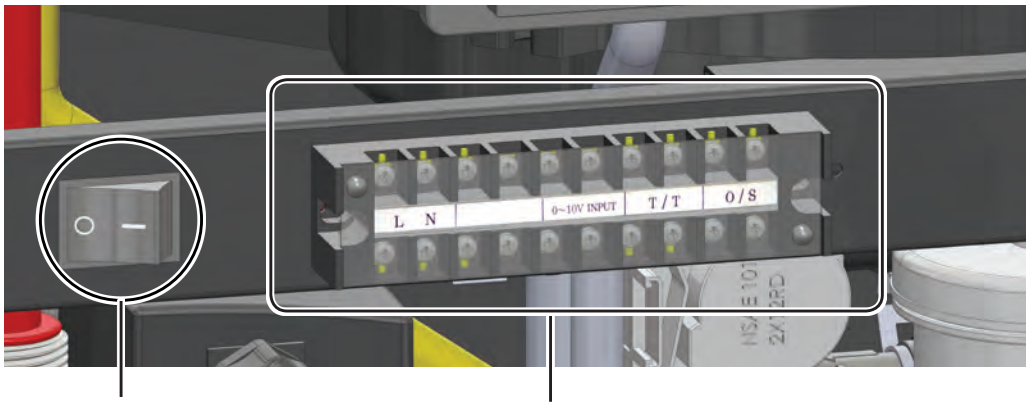


Manual Switch

Terminal Block

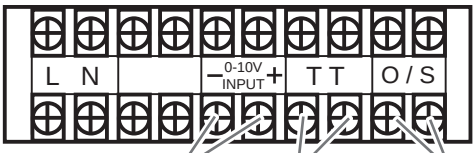


0 - 10V External Input

Thermostat Connection

Outdoor Sensor

**WARNING**

- Install wiring and electrically ground boiler in accordance with authority having jurisdiction or, in the absence of such requirements, follow the National Electrical Code, NFPA 70, and/or CSA C22.1 Electrical Code-Part 1 in Canada.

- ELECTRICAL SHOCK HAZARD — For your safety, turn off electrical power supply at service entrance panel before making any electrical connections to avoid possible electric shock hazard. Failure to do so can cause severe personal injury or death.

- This appliance must be electrically grounded. Ensure the electrical receptacle that the combination boiler will be plugged into, is properly grounded; if wiring directly.
- Do not attach the ground wire to either the gas or the water piping as plastic pipe or dielectric unions may isolate the Combination boiler electrically.
- The wiring diagrams contained in this manual are for reference purposes only.
- Refer to these diagrams and diagrams from external controls used with this appliance. Read, understand, and follow all wiring instructions.
- Do not disconnect the power supply when the unit is in normal operation. Damage caused by freezing is not covered under the warranty.
- Manual(Rocker) switch maximum allowable current for each circulator is 16 amps at 125VAC.
  ( Housing : Nylon #66 UL 94V-2 , Rocker : Nylon #66 UL 94V-2, Terminal : Copper Alloy )
- Terminal block (External power connector) : DFT-20A-10P (20 amps at 300VAC)

## 4.18 Electrical Wiring Connections (cont)

### FTCW199

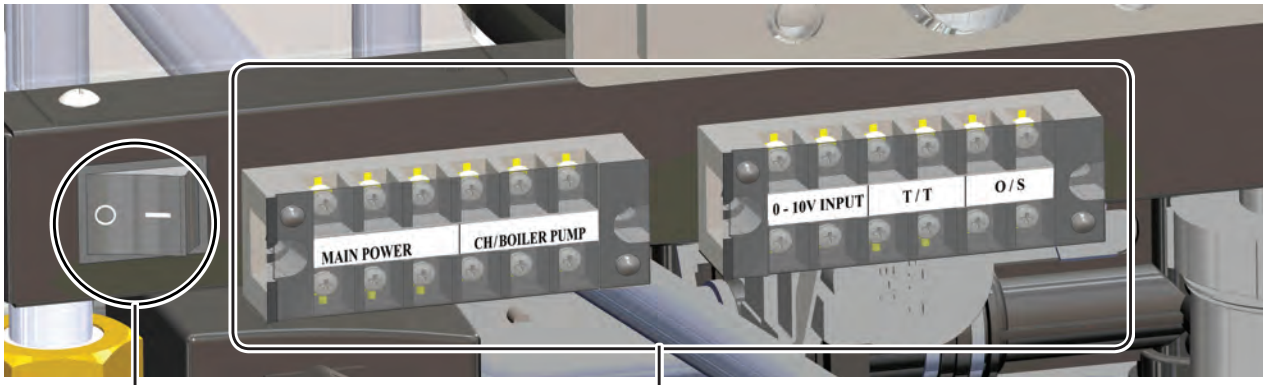


Manual Switch

Terminal Blocks

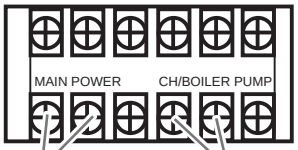


Main Power

External CH Pump

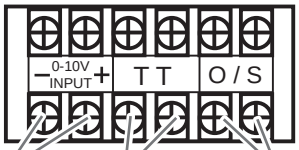


0 - 10V External Input

Thermostat Connection

Outdoor Sensor

## 4.19 DIP Switches

| ON | OFF |
|---|---|
| **MIN** Fire | Normal Operation |
| **MAX** Fire | Normal Operation |
| NG Natural | LP Propane |
| 3" Vent Size | 2" Vent Size |

| | | | | |
|---|---|---|---|---|
| | ON | OFF | ON | ON |
| | ON | OFF | OFF | ON |
| | OFF | ON | ON | ON |
| MBH | N/A | 140 | N/A | 199 |

REFERENCE ONLY. DO NOT CHANGE

System Control Setting

| | |
|---|---|
| Maximum flame detecting voltage | 2.4V |
| Pre-purge time (Tp) | Maximum 10s, minimum 1s |
| Safety Time (igniting time) (Ts) | 3s |
| Igniting interval time | 10s |
| Post-purge time (Tip) | 120S (1st : 60s + 2nd 60s) |
| Over-heating 1,2,3 protection detection time | <3s |
| Pump1 post circulating time (T1pv) | 60s |
| Pump2 post circulating time (T1pv) | 60s |
| High & Low Water Level detection time | <6s |
| High & Low Water Level Recover time | <6s |

# SECTION 4. Installation

## 4.20 Control Board, Electrical Diagram

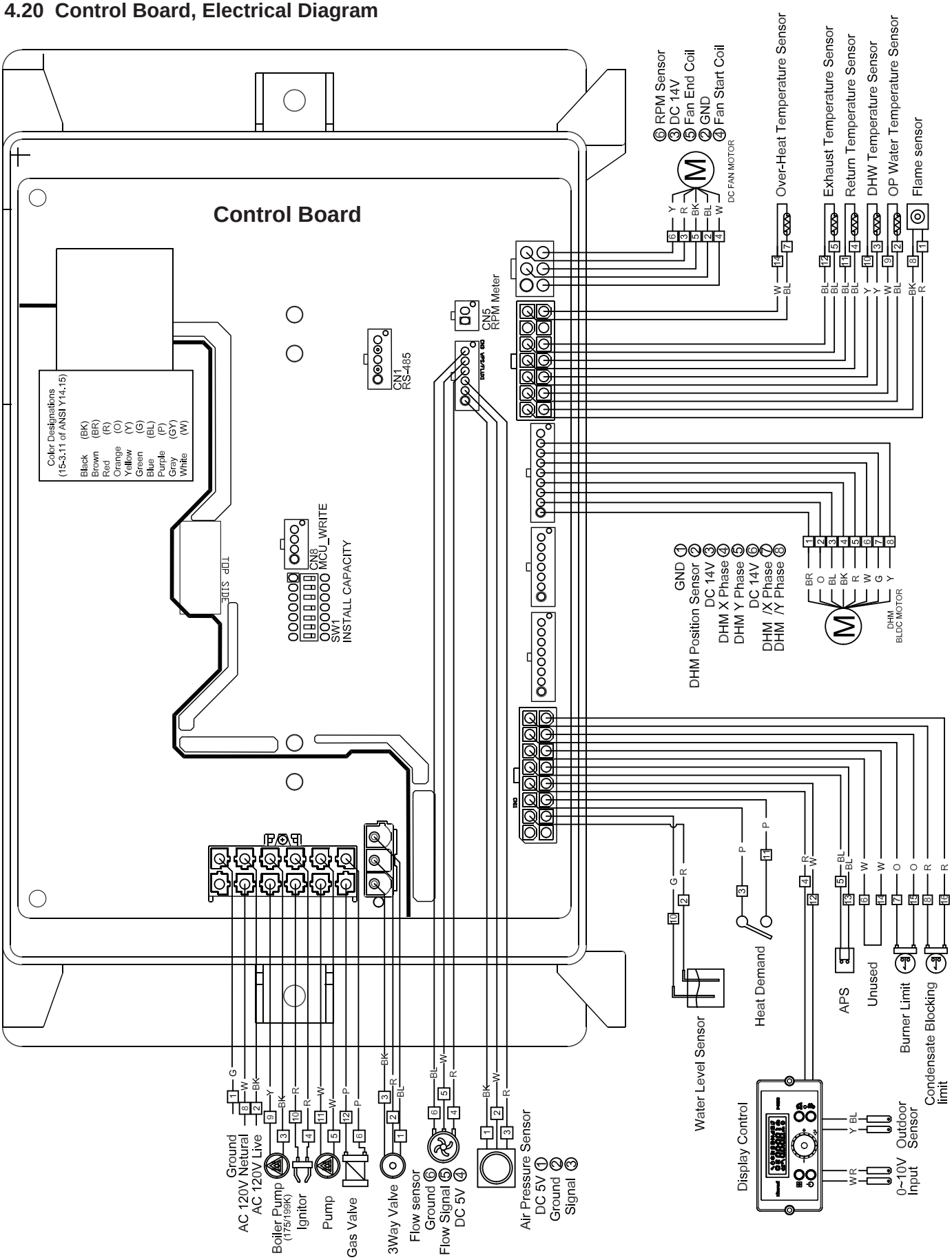

# SECTION 4. Installation

## 4.21 Ladder Diagram

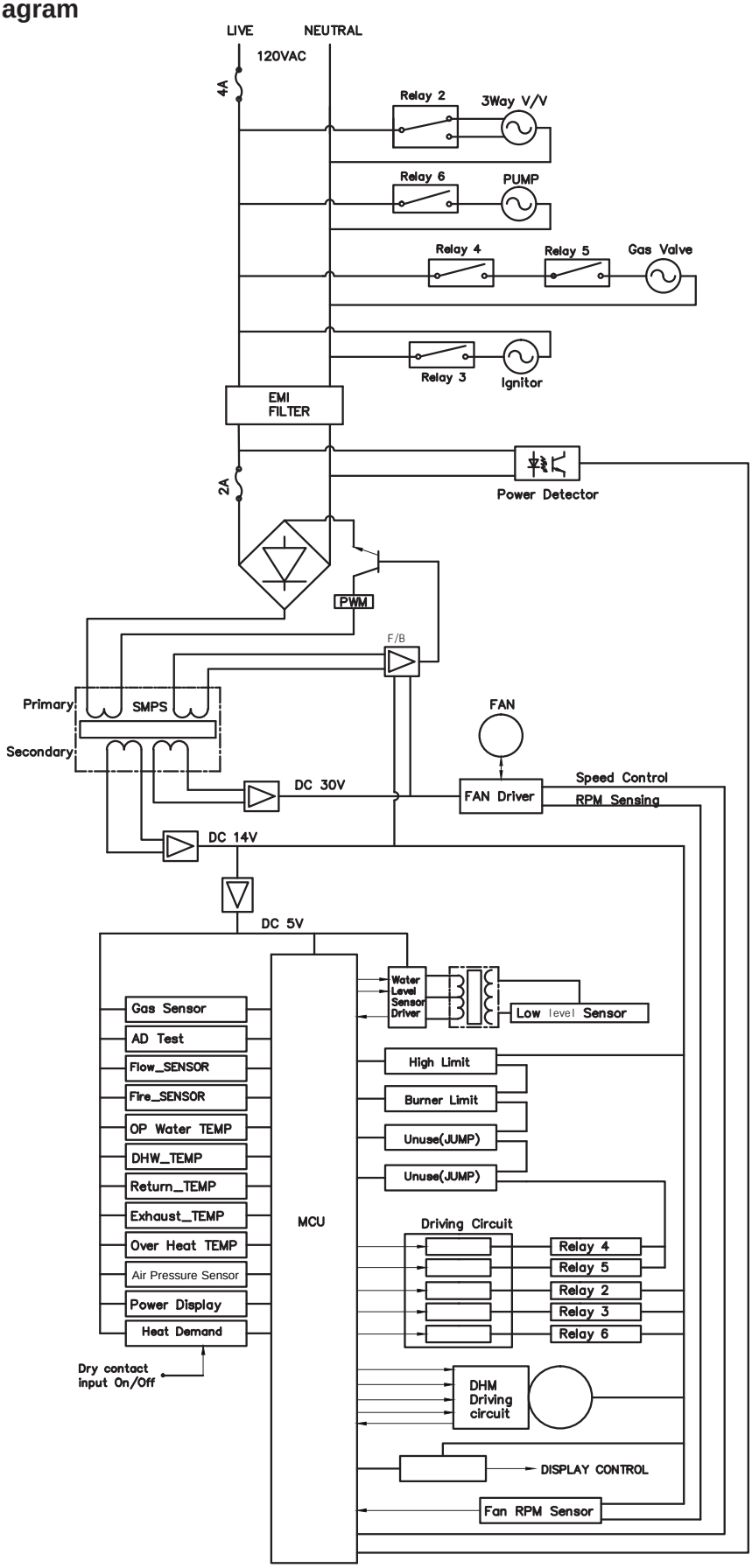

# SECTION 4. Installation

## 4.22 Electrical Connections

| Connector | | | Description | HT SELV |
|---|---|---|---|---|
| #, Location, Type | PIN | Label | | |
| CN9 65001WS-12 | 1 | - | GROUND | HT (120V~) |
| | 2 | L | Power Supply Line | HT (120V~) |
| | 3 | CP1 | Not Used | HT (120V~) |
| | 4 | IT | Igniter | HT (120V~) |
| | 5 | L(HT) | Pump : CH | HT (120V~) |
| | 6 | GV | Gas Valve | HT (120V~) |
| | 7 | - | - | - |
| | 8 | N | Power Supply Neutral | HT (120V~) |
| | 9-12 | ⎓ N ⎓ | AC Power COM Line | HT (120V~) |
| CN6 LW6A4-03 | 1 | CP3/3Way | 3 Way Valve | HT (120V~) |
| | 3 | | | HT (120V~) |
| CN1 SMW250-5D | 1 | RS-485 | RS485 + | SELV (5V) |
| | 2 | | GND | SELV (5V) |
| | 3 | | RS485 - | SELV (5V) |
| CN4 LWD1140-06D | 1 | FAN | Not Used | - |
| | 2 | | GND | SELV (30V) |
| | 3 | | VDD | SELV (14V) |
| | 4 | | Fan power(start coil) | SELV (30V) |
| | 5 | | Fan power(end coil) | SELV (30V) |
| | 6 | | Fan speed feedback signal | SELV (14V) |
| CN8 SMW250-04D | 1 | MCU ISP | GND | SELV (5V) |
| | 2 | | ISP /Reset port | SELV (5V) |
| | 3 | | ISP TOOL0 Data port | SELV (5V) |
| | 4 | | VCC | SELV (5V) |
| CN11 LWD1140-16 | 1 | HWL | Not Used | SELV (12V~) |
| | 8 | | | |
| | 2 | LWL | Low Water Level Leakage Sensor | SELV (12V~) |
| | 10 | | | |
| | 3 | HD | Central Heating Demand | SELV (5V) |
| | 11 | | | |
| | 4 | TH | Connect to the Display Control(Thermostat) | SELV (14V) |
| | 12 | | | |
| | 5 | APS | Jump | SELV (14V) |
| | 13 | | | |
| | 6 | EL | Jump | SELV (14V) |
| | 14 | | | |
| | 7 | BL | Burner Limit | SELV (14V) |
| | 15 | | | |
| | 8 | HL | Condensate Block | SELV (14V) |
| | 16 | | | |

# SECTION 4. Installation

## 4.22 Electrical Connections

| Connector | | | Description | HT SELV |
|---|---|---|---|---|
| #, Location, Type | PIN | Label | | |
| CN7 LWD1140-14 | 1 | F.S | Flame Detect Sensor | SELV (5V) |
| | 8 | | | |
| | 2 | OP.S | Operating water temperature sensor | SELV (5V) |
| | 9 | | | |
| | 3 | DH.S | DHW temperature sensor | SELV (5V) |
| | 10 | | | |
| | 4 | I.S | Return temperature sensor | SELV (5V) |
| | 11 | | | |
| | 5 | BG.S | Venting (Exhaust) temperature sensor | SELV (5V) |
| | 12 | | | |
| | 6 | ST.S | Not Used | SELV (5V) |
| | 13 | | | |
| | 7 | SP.S | Over-Heat temperature sensor | SELV (5V) |
| | 14 | | | |
| CN14 SMW250-09D | 1 | DHM | GND | SELV (14V) |
| | 2 | | DHM Stepper motor position | SELV (14V) |
| | 3 | | VDD | SELV (14V) |
| | 4 | | DHM Stepper motor coil X phase | SELV (14V) |
| | 5 | | DHM Stepper motor coil Y phase | SELV (14V) |
| | 6 | | VDD | SELV (14V) |
| | 7 | | DHM Stepper motor coil /X phase | SELV (14V) |
| | 8 | | DHM power IWM Stepper motor coil /Y phase | SELV (14V) |
| | 9 | | Unuse | - |
| CN3 SMW250-06D | 1 | APS SENSOR | VCC | SELV (5V) |
| | 2 | | GND | SELV (5V) |
| | 3 | | Voltage Input | SELV (5V) |
| | 4 | FLUX1 | VCC | SELV (5V) |
| | 5 | | Water Flow Sensor | SELV (5V) |
| | 6 | | GND | SELV (5V) |
| CN5 SMW250-10D | 1 | RPM | FAN RPM Check | SELV (5V) |
| | 2 | | GND | SELV (5V) |

# SECTION 5. Control Display and Operation



The Control Display

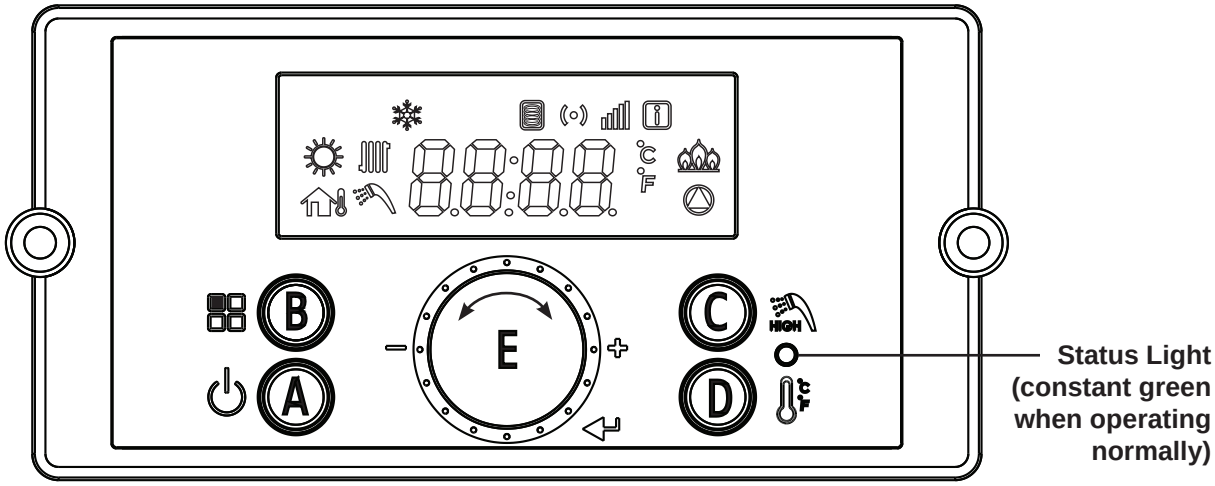


**The Control Display** has a Control Dial (E), 4 buttons (A, B, C, D), and a Liquid Crystal Display (with 72 back-lit segments). This section of this manual gives instruction on how to navigate into the many functions of the FT and to change temperature set points, set system variables and controller parameters.

| Buttons | | | Functionality | |
|---|---|---|---|---|
| | | | **PRESS** (Tap) | **PRESS and HOLD** (5 seconds) |
| A | | Display Power | Turns Control Display **ON/OFF** | |
| B | | Modes | Tap to return to menu | (If Display Power was On ) **Status Display Mode**<br>(If Display Power was Off ) **Installer Mode** |
| C | | Hot Water | **DHW Set-Point LOW Range**<br>95 - 120°F (35 - 49°C) | **DHW Set-Point HIGH Range**<br>121 - 140°F (49.5 - 60°C) |
| D | | Central Heat | **CH set-point mode** (boiler only) | **Toggle (°C / °F)** |
| E | | Scroll / Select | Turn to scroll, tap to select<br>(clockwise or counterclockwise) | |

- Temperature Specifications
  Operating ambient Temperature Range : -10 to 60°C.
  Operating Relative Humidity up to: 90% at 40°C.
  Shipping & Storage Temperature Range of : -20 to 80°C.

## SECTION 5. Control Display and Operation

5.2 LCD Overview

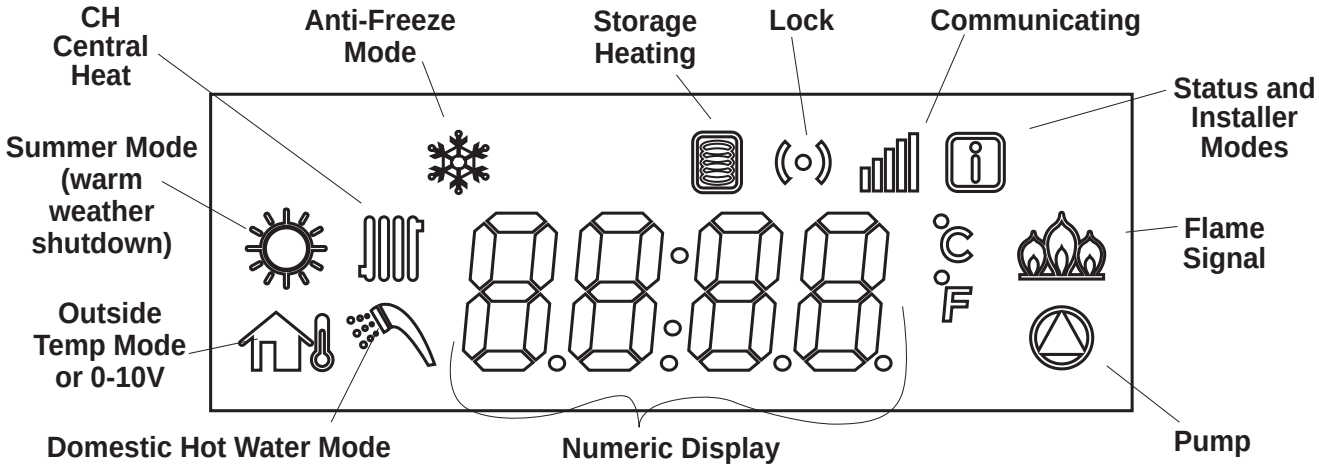


| | |
|---|---|
| CH mode | Central Heat mode icon can be adjusted |
| Anti-freeze mode | Anti-freeze mode icon |
| Storage Heating mode | Stored Water Being Heated, can be adjusted |
| Lock mode | Buttons-locked mode icon |
| Communication | Communication icon |
| Summer mode | Only DHW Mode, can be adjusted (warm weather shutdown) |
| Status and Installer mode | The Status Mode or the Installer Mode is Active (all parameters) |
| Flame signal | Flame Signal icon |
| Pump icon | Water pump operation (CH or DHW) icon |
| Numeric Display | Number and character display, to display all parameters |
| DHW mode | Combination boiler Set Point, can be adjusted |
| Outside temp or 0-10 V mode | Operating by outside temperature or 0-10V |

The LCD will illuminate when a user action is detected (a button is pressed) and will turn back off after 20 seconds.

* NOTE: The display will not allow changes when the lock mode is activated.
To exit the Lock mode, press the button.

**WARNING**

Do not use this appliance if any part has been under water. Immediately call a qualified service technician to inspect the appliance and to replace any part of the control system and any gas control that may have been under water.

# SECTION 5. Control Display and Operation



■ Operating Mode

After the Power is turned on, and/or the Control Display is turned on ⏻, the Control Display will go through a 'Start Up' checklist and briefly show a sequence of diagnostic codes before entering into the 'Operating Mode. It will then display the following information.

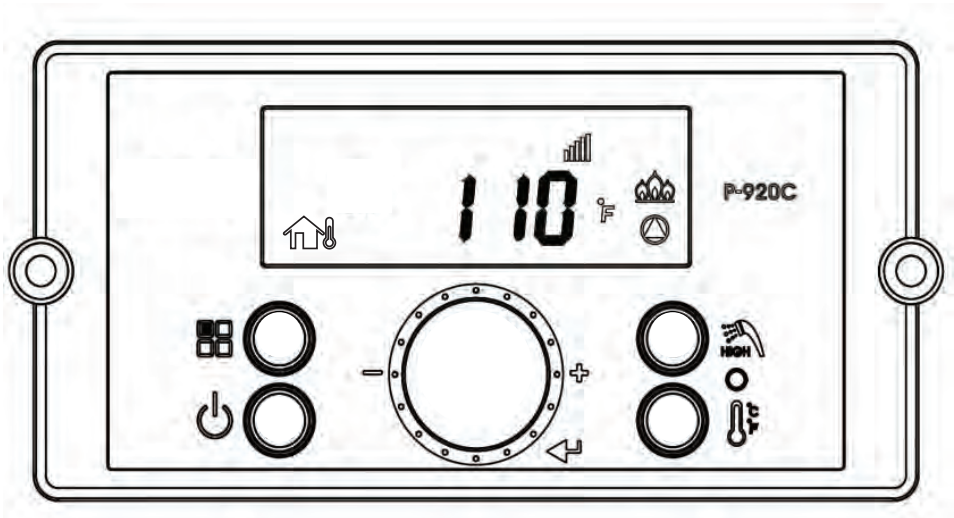


| Indicate | Example |
|---|---|
| Current Operating Temperature | 110°F |
| Temperature sign Celsius or Fahrenheit letter | °C or °F |
| Display and Controller are communicating | |
| If flame detected | |
| If pump is operating | |
| Outdoor sensor or 0-10V | |

## SECTION 5. Control Display and Operation

### 5.4 Status Display Mode

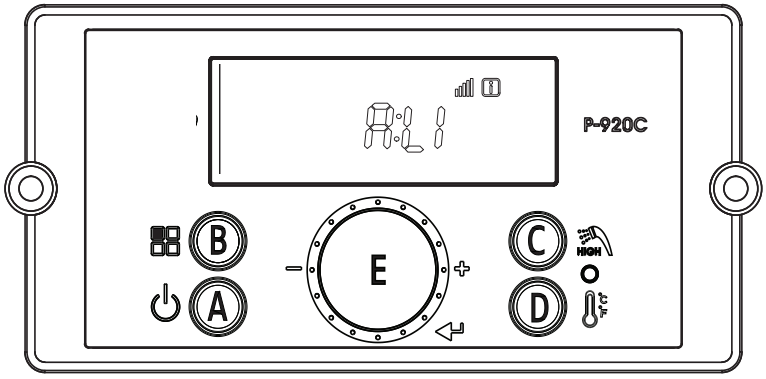


| Digital Display | | Status Display Parameter | | Description | | |
|---|---|---|---|---|---|---|
| O:ot | | Outdoor temperature | | Current Outdoor temperature | | |
| A: Li or A: GA | | Flow unit | | Current flow value(Li: L/m, GA: GPM) | | |
| b: It | | CH Return Water Temperature | | Current Return Water Sensor Temperature | | |
| C: Fr | | Fan rpm | | Current fan rpm value | | |
| d: Lc | | Lock mode | | Lock mode ON/OFF | | |
| E: oP | | OP temperature | | Current OP temperature | | |
| F: dH | | DHW temperature | | Current DHW temperature | | |
| H: Eh | | Exhaust temperature | | Current Exhaust temperature | | |
| I : St | | N/A | | Not Used (Default is 0) | | |
| J: oH | | Overheat temperature | | Current Overheat temperature | | |
| L: rt | 1: PH | Burner Operation Time | Supply power time | Supply power time x 100 hour | | |
| | 2: rh | | Burner operation time | Burner operation time x 1 hour | | |
| | 3: rH | | Burner operation time | Burner operation time x 1,000 hour | | |
| | 4: It | | Ignition cycles | Ignition cycles x 10 times | | |
| | 5: IH | | Ignition cycles | Ignition cycles x 10,000 times | | |
| P: Ou | | Displays output condition for internal primary pump and three way valve. - Off - On | | 1st Icon | 2nd Icon | 3rd Icon |
| | | | | Not Used | Internal CH Pump | 3 Way Valve |
| | | | | | | |
| | | | | | | |

## To change any of the above listed Status Parameters,

Press and Hold Button B to get into the Status Display Mode.

Rotate Dial E until you find the Parameter that you wish to change. Tap Dial E to enter that Parameter.

Adjust to the setting that you require and then press (tap) Dial E to save and to Exit.

# SECTION 5. Control Display and Operation

## 5.5 DHW Set Point Change Mode

■ DHW Set Point Change Modes
The display shows the following information when changing water heating temperature set points.

Changing between Celsius and Fahrenheit

When the button D is pressed (for more than 5 seconds), temperature unit will toggle between °C and °F.

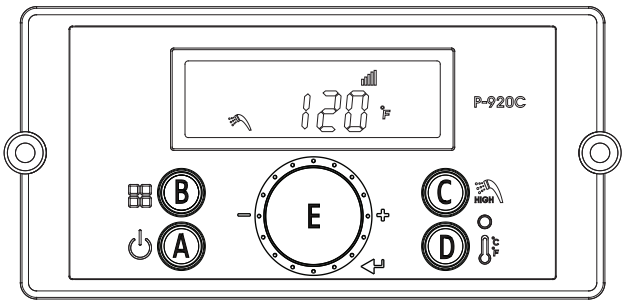


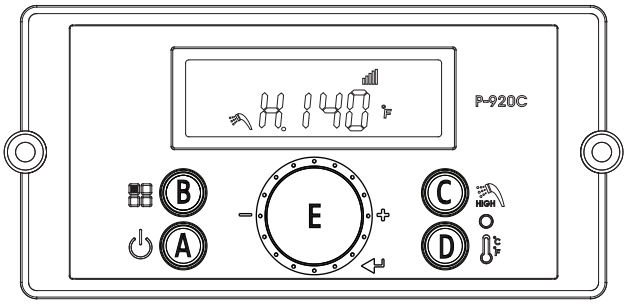


| Indicate | Example |
|---|---|
| Current DHW set-point temperature | 120°F |
| Temperature sign Celsius or Fahrenheit letter | °C or °F |
| If display is communicating with the main controller normally, the communication icon will be indicated. | |
| When DHW set-point range is high : from 121°F (49.5°C) to 140°F (60.0°C) | H . 140°F |
| When changing DHW setpoint, the DHW icon will flash | HIGH |

* Default DHW set-point is 120°F (49°C)

### • DHW 95-120°F (35 - 49°C) LOW range (Default)

**-To change LOW range,** press the C Button. The DHW icon and current DHW LOW will flash (a flashing value means it can be changed).

-Turn dial E clockwise to increase and counterclockwise to decrease until desired temperature is reached.

-Press dial E to save setpoint changes.

### • DHW 121 - 140°F (49.5 - 60°C) HIGH range

**-To change HIGH range,** press and **HOLD** the C button for more than 5 seconds. The DHW icon and current DHW HIGH will flash (a flashing value means it can be changed).

-Turn dial E clockwise to increase and counterclockwise to decrease until desired temperature is reached.

-Press dial E to save setpoint changes and to Exit.

**⚠ DANGER**

Scalding may occur within 5 seconds at a setting of 140°F (60°C). Water temperatures over 125°F can cause severe burns, or death from scalding. Children, disabled, and elderly are at highest risk of being scalded. Read all instructions before setting temperature at appliance. Feel water before bathing or showering.

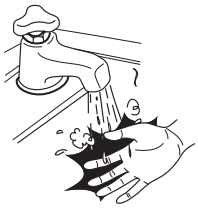

## SECTION 5. Control Display and Operation

### 5.6 CH Set Point Change Mode

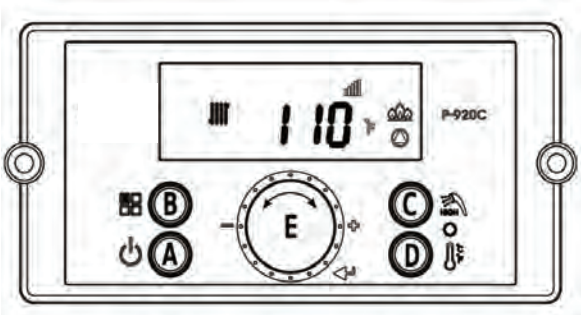


Changing between Celsius and Fahrenheit

When the button D is pressed (for more than 5 seconds), temperature unit will toggle between °C and °F.

| Indicate | Example |
|---|---|
| Current Operating Temperature | 110°F |
| Temperature sign Celsius or Fahrenheit letter | °C or °F |
| Display and Controller are communicating | |
| If flame detected | |
| If pump is operating | |
| When changing CH Setpoint, the CH Icon will flash | |

Default CH set-point is 120°F (49°C)
CH set-point range is 86 - 180°F (30.0 ~ 82.0°C)

**To change CH Setpoint,** press the D button. The CH Icon and current CH Setpoint will flash.

Turn the E dial clockwise to increase, and counterclockwise to decrease CH setpoint, until desired temperature is reached.

Press E dial to save changes and to Exit.

### 5.7 Storage Mode

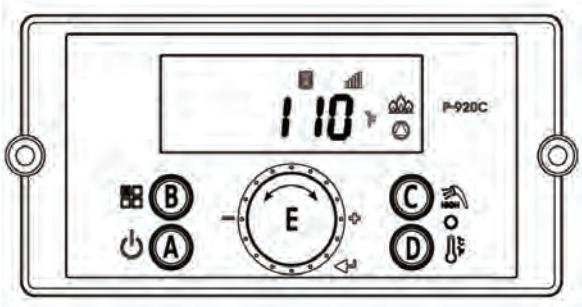


| Indicate | Example |
|---|---|
| Current Operating Temperature | 110°F |
| Temperature sign Celsius or Fahrenheit letter | °C or °F |
| Display and Controller are communicating | |
| If flame detected | |
| Storage mode indication | |
| If Pump is operating | |

**To change Storage Mode Temp,** First turn OFF the power to the Control Display.

Then Press and Hold Button B to get into the Installer Mode.

Rotate Dial E until you find **5:St** Tap Dial E to enter Storage Mode. Storage Mode indicates that the boiler is heating the water held in the internal storage tank. When Storage Mode is active, the display will appear as shown.

Turn the E dial clockwise to increase, and counterclockwise to decrease setting.

Press E dial to save changes and to Exit.

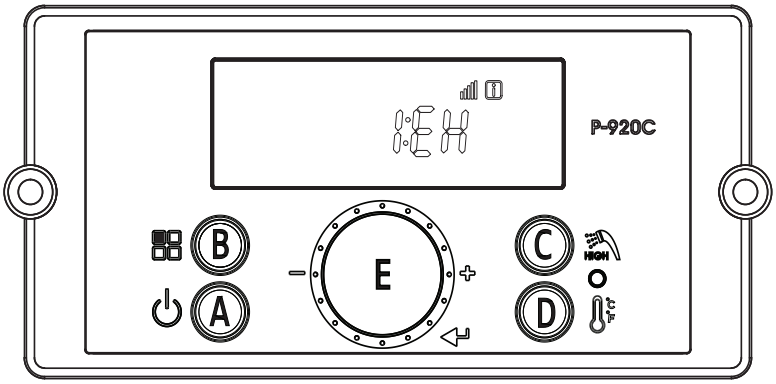


These changes are to be made only by a qualified technician.

**To change any of the Installer Parameters,** Start by turning **OFF** the Power to the Display Control.

Then, with the power OFF, Press and HOLD (more than 5 seconds) the Button B to get into the Installer Mode.

Rotate Dial E until you find the Installer Parameter (full list on facing page) that you wish to change. Tap Dial E to enter that Parameter.

Adjust to the setting that you require and then press (tap) Dial E to save and to Exit.

Finish by pressing button B

# SECTION 5. Control Display and Operation

## 5.8 Installer Mode

| Index | Parameter | Description |
|---|---|---|
| **1: EH** | History entry | History fault code (E0~E9) |
| **2: cE** | Clear Error History | Clearing of error History buffer |
| **3: In** | System initialize | System initialize to default |
| **4: Fu** | Flow unit | gallon / liter |
| **5: St** | Heat storage function | Heat storage function On/Off |
| **6: OH** | Maximum Outdoor Temperature | When used with an outdoor sensor, sets the maximum outdoor design temperature for the system design. Warm weather shut down will disable the appliance if the programmed outdoor temperature is exceeded. Maximum outdoor temperature must be set 9°F above the minimum outdoor temperature. Range: (Minimum Outdoor Temperature + 9°F) to 110°F Default 68°F (20°C) |
| **7: OL** | Minimum Outdoor Temperature | Sets the minimum outdoor design temperature for the system. Minimum outdoor temperature must be set 9°F below the maximum outdoor temperature. Range: -4°F to (Maximum Outdoor Temperature - 9°F) |
| **8: FH** | Max fan | Adjusts Maximum Fan Speed Range: -30 - +30 |
| **9: FL** | Min fan | Adjusts Minimum Fan Speed Range: -30 -+30 |
| **10: dr** | Delete running time | Delete running time |
| **11: dI** | Delete igniting times | Delete igniting times |
| **12: bt** | Outside Unit Function Delay Time (boost time) | When heating in the outside unit function for the first time, there will be a delay. (0~120 min, Default 0) |
| **13: Ft** | Delay time for heating burner operation | Burner does not operate during the delay time when the burner is turned off due to the temperature during heating operation. (0~20 min, Default 1 min) |
| **14: bo** | Setting temperature of burner ON. | Heating temperature setting during heating operation – Operate in burner ON temperature setting Range: -12.7°C(9°F)~-2.7°C(27°F), Default 2.7°C(27°F) |
| **15: OF** | Warm Weather Shutdown | This warm weather temperature setting will shut down CH Mode 10°C(50°F)~43°C(110°F), Default 38°C (100°F) |
| **16:cH** | Setting for Heating Maximum Temperature | Range:[Minimum Temperature -12.7°C(9°F)]~82°C(180°F), Default 82°C(180°F) |
| **17:cL** | Setting for Heating Minimum Temperature | Range: 30°C(86°F)~[Maximum Temperature-12.7°C(-9°F)],Default 30°C(86°F) |
| **18:dH** | Setting for Hot Water Maximum Temperature | 49°C(120°F)~60°C(140°F), Default 60°C(140°F) |
| **19:cb** | Heating Combustion Rate | 50%~100%, Default 100% |
| **20:db** | Hot Water Combustion Rate | 50%~100%, Default 100% |
| **21:PP** | Pump Post-Purge Time | (Heating Pump) 1min ~ 60min, Default 40min |
| **22:Po** | Pump on Time | (Heating Pump Repeat ON Time) 1 min ~60 min, Default 5 min |
| **23:PF** | Pump off Time | (Heating Pump Repeat Off Time) 0min ~60 min, Default 10 min |
| **24:SF** | Heat storage off Temperature | 60°C(140°F)~75°C(167°F),Default(70°C)158°F |
| **25:So** | Heat storage on Temperature. | (off Temperature-Setting Temperature) -12.7°C(9°F)~2.2°C(36°F), Default (-2.7°C) 27°F |
| **26:dt** | Delay time when switching from DHW mode to CH mode | Range: 0 – 2 minutes,Default 2min |
| **27:PE** | Internal CH Pump Post-Purge Time, T/T Satisfied | Allows the user to set the appliance pump post purge time once the appliance CH setpoint and thermostat are satisfied. Range: 1-5 minutes,Default 1min |
| **28: HA** | High Altitude setting | (Normal)0<1<2<4 (High) |
| **29: AP** | Internal CH Pump and 3-way valve Pump Test Mode | This function sets the time to run both the Internal CH and 3-way valve pumps to purge air from the system. Range: 1 – 30 minutes ,Default 5min |
| | Internal CH Pump and 3-way valve Pump Test Mode | Turn this function on to activate Internal CH and 3-way valve pump testing. Only works in installation mode. Turns off when in normal mode. Default OFF |
| **30: dP** | DHW Timeout Feature | Range: 0~12 time, '0' OFF, Default: 4 time |

The Full List of Installer Mode Parameters

# SECTION 5. Control Display and Operation

## 5.9 Outdoor Reset Adjustment

Outdoor Reset varies the control setpoint based on the outdoor temperature. The reset function works as shown in Figure 'CH Outdoor Reset'. When the outdoor air temperature reaches 6:OH "high outdoor temperature setpoint", the control point setting is adjusted to 17:cL "low boiler temperature setpoint". When the outdoor air temperature reaches 7:OL "low outdoor temperature setpoint" the control setpoint is adjusted to 16:cH "high boiler temperature".

Default outdoor reset setpoint is 100°F (38°C)

The Outdoor Temperature Mode Icon on the display will flash if an Outdoor Sensor or 0-10 Volt is not connected to the appliance.
To check the CH Target Temperature while using Outdoor Temperature Mode, press the button while the appliance is operational and the display panel is powered on.

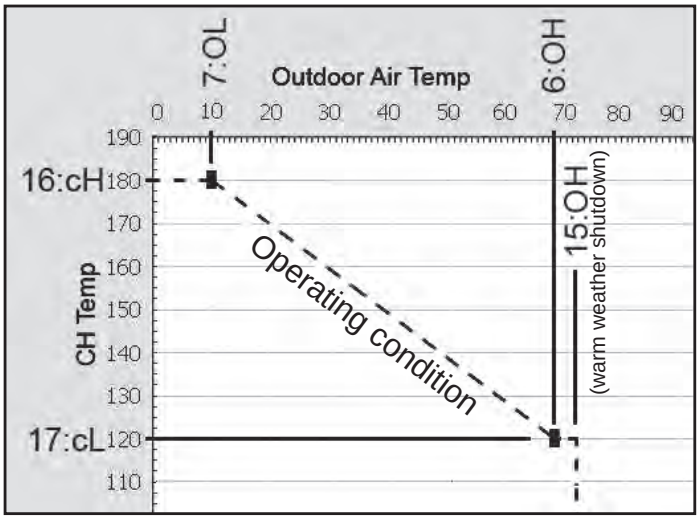


**CH Outdoor Reset**

Connect to terminal strip as outlined 4.17 Electrical Connections.

**NOTE: 0 - 10VDC terminals may not be used for both outdoor reset and 0 - 10VDC temp setpoint simultaneously.**

## 5.10 External Set Point Temperature Control

A signal from a building management system may be connected to the appliance to enable remote control. This signal should be a 0-10 volt DC signal. When this input is enabled, a building control system can be used to control the set point temperature of the appliance.

The control interprets the 0-10 volt signal as follows; when the signal is between 0 and 1.5 volts, the appliance will be in standby mode, not firing.
When the signal rises above 1.5 volts, the appliance will ignite. As the signal continues to rise towards its maximum of 10 volts, the appliance will increase in set point temperature. Adjust 16:cH and 17:cL to set MIN and MAX boiler water temperatures respectively.

Connect a building management system or other auxiliary control signal to the terminals marked for this purpose on the appliance terminal block (shown in Piping Diagrams, this manual). Caution should be used to ensure that the 0-10 VOLT + connection does not become connected to ground.

Connect to terminal strip as outlined 4.17 Electrical Connections.

**NOTE: 0 - 10VDC terminals may not be used for both outdoor reset and 0 - 10VDC temp setpoint simultaneously.**

## 5.11 Error Mode

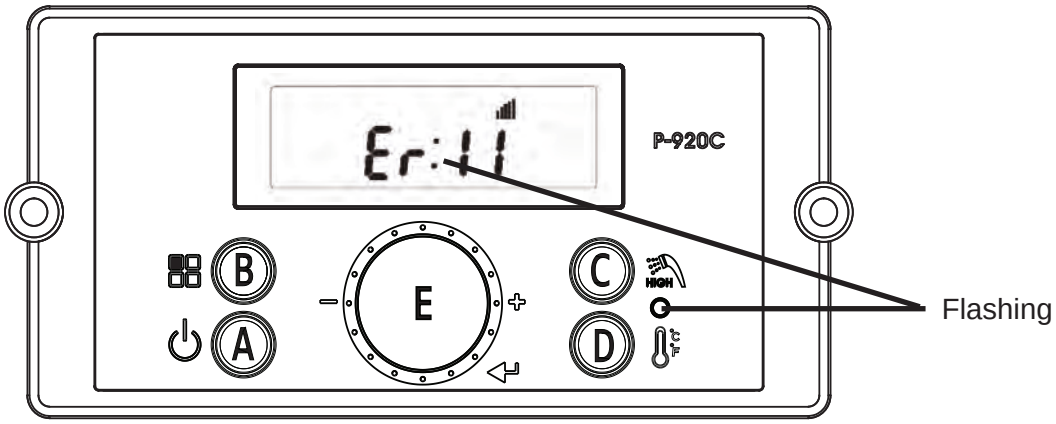


| Indicate | Example |
|---|---|
| Error ‘ Er : ’ will flash | Er:11 |
| Error Code | Er:11 |
| Display and Controller are communicating | |

NOTE: When communication between the Control Display and the main controller is lost, the will not be displayed.

# SECTION 6. Error Codes

| Error Code | Error Code Description | Possible Remedies | Recover methods |
|---|---|---|---|
| 10 | Flame has Extinguished 8 (Eight) Times | Press the Power button to clear the Error Code.<br>If Error happens again:<br>1. Monitor the gas pressure to the appliance while in operation. Ensure pressure is between 3.5 and 14” WC.<br>2. Check gas valve wire. Ensure connection is secure.<br>3. Check flame detection sensor. Ensure connections are secure. Normal operating settings are more than 2.5DC before ignition, less than 2.5DC after ignition.<br>4. Check vent terminations. Ensure there are no blockages.<br>5. Assure that the flame is stable when lit.<br>6. If the problem persists, replace the main control. | Hard Lock |
| 11 | Ignition has Failed 10 (Ten) Times | Press the Power button to clear the Error Code.<br>If Error happens again:<br>1. Monitor the gas pressure to the appliance while in operation. Ensure pressure is between 3.5 and 14” WC.<br>2. Check gas valve wire. Ensure connection is secure.<br>3. Check flame detection sensor. Ensure connections are secure. Normal operating settings are more than 2.5DC before ignition, less than 2.5DC after ignition.<br>4. Check igniter transformer for proper connection.<br>5. Clean the spark igniter with steel wool to remove oxides. Ensure proper separation (3-4 mm).<br>6. Replace the spark igniter if damaged.<br>7. Assure that the flame is stable when lit.<br>8. If the problem persists, replace the main control. | Hard Lock |
| 16 | Operating Temperature Sensor detects Water Temperature Greater than 203°F (95°C) | Press the Power button to clear the Error Code.<br>If Error happens again:<br>1. Check if dip switch Max Fire setting is ON. Switches 6 and 7 should be OFF for normal operation.<br>2. Check if CH inlet pipe is blocked. Ensure there is enough water flowing to the appliance.<br>3. Check Operating Temperature sensor at CH heat exchanger outlet. If resistance is zero, replace the sensor.<br>4. If the problem persists, replace the main control | Hard Lock |
| 20 | Condensate – Closed is Normal, Open is Fault (Condensate Drain Trap) | Press the Power button to clear the Error Code.<br>1. Check Condensate and main controller connections. Ensure all are secure.<br>2. Check Condensate sensor resistance. If resistance is zero, replace the switch.<br>3. Check Condensate hose. Ensure it is connected and in good condition.<br>4. Check condensate line and termination for blockages.<br>5. Check Vent Pipe for blockages.<br>6. If the problem persists, replace the main control. | Hard Lock |
| 28 | Overheat Sensor Open or Short | This Error Code will go away when CH temperature decreases.<br>If Error happens again:<br>1. Check overheat temperature sensor. Ensure connections are secure.<br>2. Check overheat sensor resistance. If resistance is zero, replace the sensor.<br>3. If the problem persists, replace the main control. | Soft Lock |
| 32 | DHW Sensor Open or Short | This Error Code will go away when outlet DHW temperature decreases.<br>If Error happens again:<br>1. Check DHW outlet temperature sensor. Ensure connections are secure.<br>2. Check sensor resistance. If resistance is zero, replace the sensor.<br>3. If the problem persists, replace the main control. | Soft Lock |
| 33 | CH Temperature Sensor Open or Short | This Error Code will go away when CH temperature decreases.<br>If Error happens again:<br>1. Check CH temperature sensor. Ensure connections are secure.<br>2. Check CH sensor resistance. If resistance is zero, replace the sensor.<br>3. If the problem persists, replace the main control. | Soft Lock |

# SECTION 6. Error Codes (continued)

| Error Code | Error Code Description | Possible Remedies | Recover methods |
|---|---|---|---|
| 35 | Venting (Exhaust) Sensor Open or Short | This Error Code will go away when exhaust temperature decreases.<br>If Error happens again:<br>1. Check Venting (exhaust) temperature sensor. Ensure connections are secure.<br>2. Check sensor resistance. If resistance is zero, replace the sensor.<br>3. Check vent pipes for blockage.<br>4. If the problem persists, replace the main control | Soft Lock |
| 36 | Abnormal Supply Voltage | Supply voltage is too low to operate. This Error Code will go away when supply voltage returns to normal operating range.<br>If Error happens again:<br>1. Ensure appliance is properly wired to a power source meeting the requirements on the rating plate.<br>2. If problem persists, replace the main control | Soft Lock |
| 37 | Abnormal Supply Frequency | Supply frequency is too high to operate. This Error Code will go away when supply frequency returns to normal operating range.<br>If Error happens again:<br>1. Ensure appliance is properly wired to a power source meeting the requirements on the rating plate.<br>2. If problem persists, replace the main control. | Soft Lock |
| 38 | Error Appears When Control Stores Data, but Data is not Saved | Press the Power button to clear the Error Code.<br>Replace the main control. | Hard Lock |
| 40 | Gas Leakage is Detected for Greater than 5 seconds, or three times within 10 minutes | IMPORTANT: If you smell gas, STOP! Follow the instructions on page 2, this manual, and call a qualified service technician or the fuel gas utility.<br>Press the Power button to clear the Error Code.<br>If Error happens again:<br>1. Check the appliance cover. Ensure it is secure.<br>2. Check gas connections for leakage with a soapy solution. Fix any leaks.<br>3. Check condition of the burner assembly.<br>4. If the problem persists, replace the main control. | Hard Lock |
| 41 | Fan Speed too High with Flame On | Press the Power button to clear the Error Code.<br>If Error happens again:<br>1. Check the vent connections for blockages.<br>2. Check the burner assembly.<br>3. Check fan operation. If fan appears to be operating normally but RPMs are too high, replace the fan.<br>4. If the problem persists, replace the main control. | Hard Lock |
| 42 | Jumped Wire Disconnected | Press the Power button to clear the Error Code.<br>If Error happens again:<br>1. Ensure the jumped wire is properly connected.<br>2. If the problem persists, replace the main control. | Soft Lock |
| 43 | Burner Overheat Switch Open | Press the Power button to clear the Error Code.<br>If Error happens again:<br>1. Check burner overheat switch connections. Ensure connections are secure.<br>2. Check switch resistance. If resistance is zero, replace the switch.<br>3. If the problem persists, replace the main control. | Hard Lock |
| 44 | Air Pressure Sensor (APS) Fault | Press the power button to reset<br>If error happens again:<br>1. Check the vent pipe for blockages.<br>2. Check the vent pipe for blockages.<br>3. If error do not clear, replace the APS<br>4. If the problem persists, replace the main control. | Hard Lock |
| 45 | Air Pressure Sensor (APS) Open | Check the aps connection.<br>1.If APS is closed and connections are secure, check APS connection.<br>2. If the problem is not happen, replace the APS<br>3. If the problem persists, replace the main control. | Soft Lock |
| 61 | Fan Speed Feedback Signal Abnormal | This Error Code will go away when the condition is remedied.<br>If Error happens again:<br>1. Check the connections to the fan. Ensure all are secure.<br>2. If the fan does not rotate during the ignition sequence, check for AC8V~26.5V power at the fan connection. If AC8V~26.5V power is present at the control, replace the fan. If the blower does not have AC8V~26.5V power, check power at the control. If AC8V~26.5V power is not present at the control, replace the control.<br>3. If the problem persists, replace the main control. | Soft Lock |

# SECTION 6. Error Codes (continued)

| Error Code | Error Code Description | Possible Remedies | Recover methods |
|---|---|---|---|
| 66 | Mixing Valve Initial Value Error<br>(Mixing Valve Cannot Return to Initial Position) | This Error Code will go away when the condition is remedied.<br>If Error happens again:<br>1. Turn power OFF and ON at the main power switch internal to the appliance.<br>2. Check wiring connections to mixing valve. Ensure all are secure.<br>3. Replace mixing valve.<br>4. If the problem persists, replace the main control. | Soft Lock |
| 68 | Mixing Valve Operation Error (Mixing Valve Stuck in Initial Position) | This Error Code will go away when the condition is remedied.<br>If Error happens again:<br>1. Turn power OFF and ON at the main power switch internal to the appliance.<br>2. Check wiring connections to mixing valve. Ensure all are secure.<br>3. Replace mixing valve.<br>4. If the problem persists, replace the main control. | Soft Lock |
| 70 | Register, Ram, Rom, I/O Port, AD Abnormal, Important EPROM Data or Safe Data Abnormal | This Error Code will go away when the condition is remedied.<br>If Error happens again:<br>1. Turn power OFF and ON at the main power switch internal to the appliance.<br>2. If the problem persists, replace the main control. | Soft Lock |
| 72 | Flame Signal Detected before Ignition | This Error Code will go away when the condition is remedied.<br>If Error happens again:<br>1. Check the appliance cover. Ensure it is secure. Flame detection sensor can detect an external light source.<br>2. Check flame detection sensor. Ensure connections are secure. Normal operating settings are more than 2.5DC before ignition, less than 2.5DC after ignition.<br>3. If the problem persists, replace the main control. | Soft Lock |
| 76 | Poor Communication | This Error Code will go away when the condition is remedied.<br>If Error happens again:<br>1. Check connections from main control to display panel.<br>2. If the problem persists, replace the display and/or the main control. | Soft Lock |
| 80 | Low Water Level Sensor (Low Water Level Detected Four (4) Consecutive times) | This Error Code will go away when the condition is remedied.<br>If Error happens again:<br>1. Ensure all valves are open to the appliance and there are no leaks.<br>2. Ensure all air has been purged from the system.<br>3. Check wiring connections to low water level sensor. Ensure all are secure.<br>4. Check low water level sensor resistance. If resistance is zero, replace the sensor.<br>5. If the problem persists, replace the main control. | Soft Lock |
| 81 | Low Water Level Circuit | This Error Code will go away when the condition is remedied.<br>If Error happens again:<br>1. Ensure all valves are open to the appliance and there are no leaks.<br>2. Check wiring connections to low water level sensor. Ensure all are secure.<br>3. Check low water level sensor resistance. If resistance is zero, replace the sensor.<br>4. If the problem persists, replace the main control. | Soft Lock |
| 85 | Freeze Protection (Appliance has detected water temperature below 34°F(1°C) | This Error Code will go away when the freezing condition is remedied.<br>If Error happens again:<br>1. Ensure appliance is located in a mechanical room protected from freezing conditions.<br>2. Ensure all valves are open to the appliance, there are no leaks.<br>2. Check wiring connections to low water level sensor. Ensure all are secure.<br>3. Check low water level sensor resistance. If resistance is zero, replace the sensor.<br>4. If the problem persists, replace the main control. | Soft Lock |
| 94 | Exhaust Sensor detects Vent Temperature is Greater than 190oF (88oC) | This Error Code will go away when the condition is remedied.<br>If Error happens again:<br>1. Check if dip switch Max Fire setting is ON. Switches 6 and 7 should be OFF for normal operation.<br>2. Check exhaust temperature sensor. Ensure connections are secure.<br>3. Check sensor resistance. If resistance is zero, replace the sensor.<br>4. Check exhaust vent for blockage.<br>5. If the problem persists, replace the control.<br>6. If the problem persists, replace the heat exchanger. | Soft Lock |

## 6.2 Fault Tree Analysis

1. Flame detection

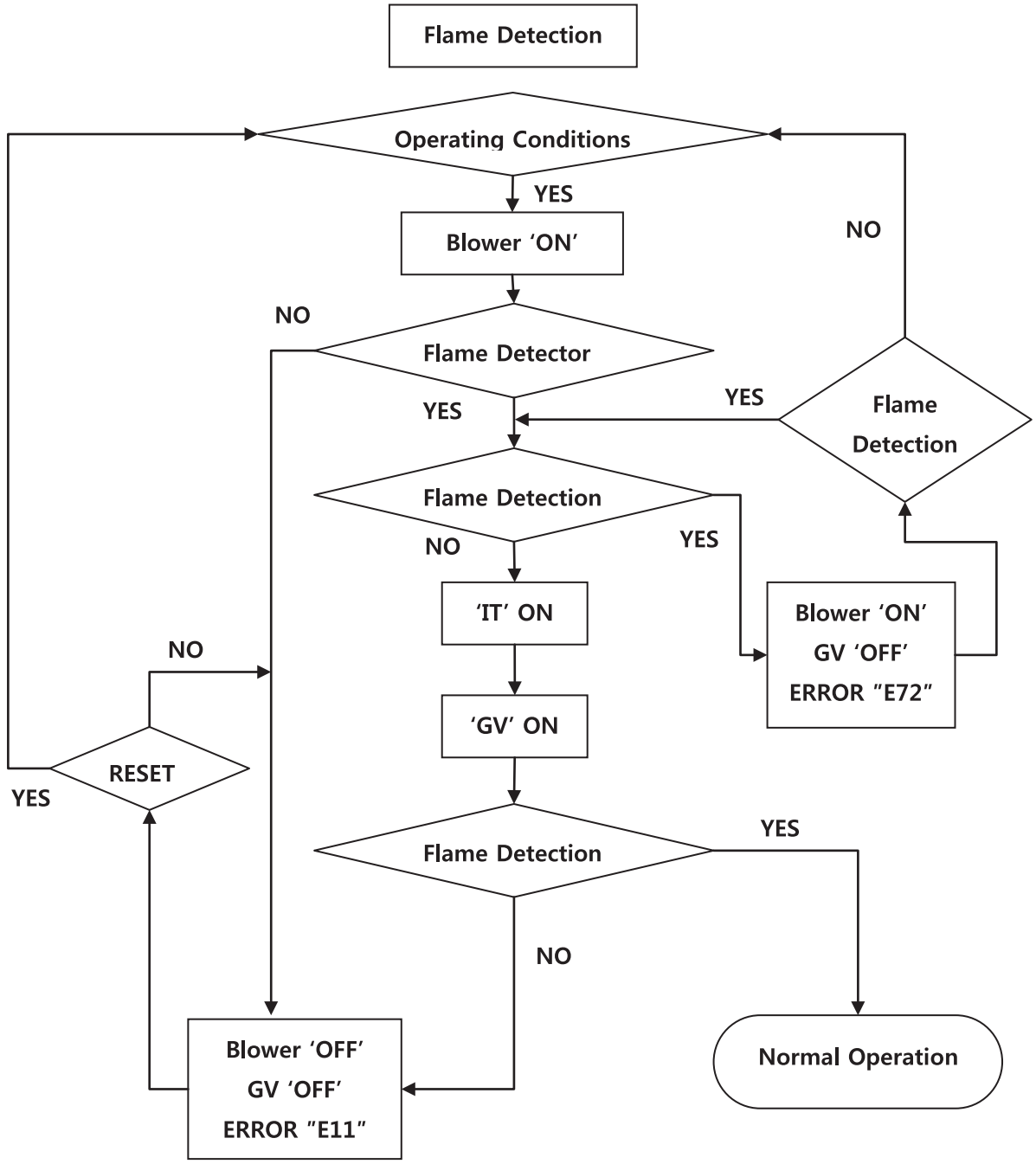

## 6.2 Fault Tree Analysis

2. Gas Detection

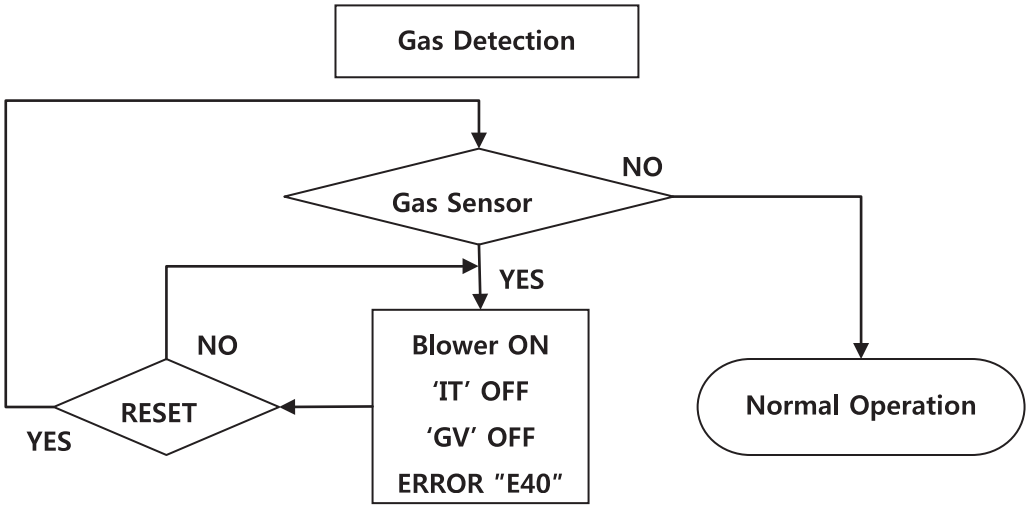


3. 'Storage', 'DHW', 'OP', 'CH overheat', 'Exhaust heat' Sensor detects

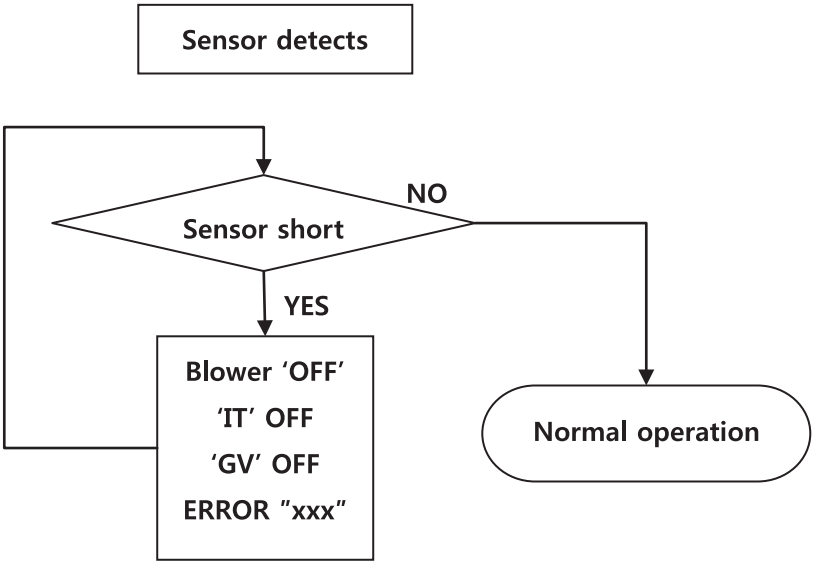


| Error code | contents |
|---|---|
| E32 | DHW NTC open or short |
| E33 | OP NTC open or short |
| E35 | Exhaust NTC open or short |

# SECTION 7. Trouble Shooting



| Question | Answer |
|---|---|
| Burner dose not ignite when the hot water is opened. | Make sure that the ON/OFF button on the Control Panel has been turned ON. |
| | If the monitor on the Control Panel is blank, make sure the power cord is plugged and 4A fuses on the main controller in the units are good. |
| | Make sure that there is water supplied to the unit. The unit activates once the inlet water flow is over 0 gpm. |
| | Make sure the cold and hot water lines are not plumbed in reverse side. |
| | Make sure that the cold water and gas supply lines are opened. |
| | Make sure that the water lines are not frozen. |
| Water is not hot enough. | Check that the setting temperature on the unit is not too low |
| | Make sure that the filter in the cold water supply line is not clogged with debris. |
| | Make sure that the gas supply type is correct. |
| | Check the supply and manifold gas pressures are in accordance with specifications. |
| | Make sure that the water flow sensor with three wires has been properly connected on the top of heat exchanger. |
| Water is too hot. | Make sure that the setting temperature on the unit is not too hot. |
| | Make sure that the filter in the cold water supply line is not clogged with debris. |
| | Make sure that the gas supply type is correct. |
| Hot water temperature fluctuates at the opened tap. | Make sure that the filter in the cold water supply line is clean. |
| | Make sure that the gas supply type is correct. |
| | Check the supply gas pressure is sufficient. |
| The blower is still operating after the combustion stops. | This is normal because the blower keeps operating for 1 minute to vent (exhaust) the flue gas from the chamber once the combustion has stopped. |
| Temperature Rise too Quickly | Occurs when supply water temperature in heat exchanger rises faster than 2°F per second during the first two minutes the burner is on. Automatically resets after a few minute delay or using manual reset on control panel. See message displayed TEMPERATURE SENSOR and follow procedure for loose connections. |
| Abnormal sounds come from unit during operation. | A leak of combustion gas between sealed chamber and exhaust tube inside the unit. Call a qualified service technician for evaluation. |
| | Improper venting termination, make sure that the venting termination complies with specification. |
| | Check the supply gas pressure is sufficient. Insufficient gas pressure will cause unstable burner flame and noise. |

## 7.2 Suggested Corrective Actions

This controller is able to record information about the boiler's condition at the time of the five previous faults or errors. Refer to the Section '5.10 Error Mode' of this manual.

| Display | Condition | Diagnostic | Corrective Action(s) |
|---|---|---|---|
| Nothing shown on display control panel and blower running at full speed. | Control is not receiving power. | Check wiring for short circuit or incorrect wiring. | Correct wiring per wiring diagram including connection of transformer to the control. |
| | | Check transformer connection to the control per wiring diagram. Check for 12V output of transformer. | Replace transformer if it is receiving 120V, but not outputting 12Vac. |
| Nothing is shown in display control panel and no other boiler components are operating. | Control is not receiving 120V power. | Check service switch and/or circuit breaker to boiler turned is on. | Turn on service switch to power boiler. |
| | | Is there 120 Volts at the service switch? | Troubleshoot and correct the power supply to the manual switch. |
| | | Is the ON/OFF POWER SWITCH (inside boiler case) turned on? | Turn ON the manual power switch inside the boiler case. |
| | | Check for 120 volts at the line voltage terminal block located inside the boiler case. | Correct wiring inside the boiler case using the wiring diagram in this manual. |
| | | Inspect the fuse. Replace if necessary. | Replace the fuse with proper part found in the replacement part section of this manual. If fuse blows again recheck wiring per diagram. |
| Nothing is shown on control panel, but boiler is operating. | Occurs when the communication is lost from the control to the display. | Check for loose connections and proper pin alignment/ engagement on the Control's plug. | Check for continuity on the wire harness from the display to the control. See repair parts section for proper replacement part. |
| | | Cycle power off and on using boiler power switch and check for operation. | Replace with new display module. See repair parts section for proper replacement part. |

# SECTION 7. Trouble Shooting

## 7.2 Suggested Corrective Actions (continued)

| Fault | Condition | Diagnostic | Corrective Action(s) |
|---|---|---|---|
| TEMPERATURE SENSOR | Occurs when a temperature sensor has electrically shorted (SHORT) or has become disconnected (OPEN). | Reset using manual reset screen on control panel. (Power button) | Check all the temperature readings of the boiler on the DIAGNOSTICS - TEMPERATURES menu to determine if any sensors are currently displayed as SHORT or OPEN. |
| | | | Check wire harness for loose connections and pin engagement at sensor Connection and Control module. |
| | | | If problem persists after checking items above replace Control. Refer to repair parts section for kit number. |
| FLAME FAULT | Occurs when flame is detected when there should be no flame. | Reset using manual reset screen on control panel. (Power button) | Burner may be operating too hot due to incorrect combustion. Inspect flame and conduct combustion test. |
| | | | Check for flame at burner via flame current with burner off. Turn boiler off and watch flame through observation port. If flame continues after shutdown replace gas valve. |
| BLOWER FAULT | Blower unable to reach required speed or does not reach 0 RPM when turned off. | Reset using manual reset screen on control panel. (Power button) | Check wire harness for loose connections and pin engagement at blower. Connections. |
| | | | Boiler in standby mode and blower not running. If BLOWER SPEED is not 0 RPM then replace blower. |
| | | | If blower does not rotate during ignition sequence check for 120V power at blower connection. If 120Vac power at blower motor and it doesn't start replace blower. Check power at Control. If 120Vac is not present at Control when boiler is powered replace Control. |
| IGNITION FAULT | Even if boiler went through 8 ignitron attempts, but cannot detect flame | Power off and on. | Dirty burner and/or heat exchanger will cause high back pressure and poor ignition. Visual inspection of flue ways often will not be able to diagnose condition. |
| | | | Check incoming gas pressure with boiler off and at Max fire. Adjust within limits on rating label. |
| | | | Check for flue pipe and intake pipe restrictions or blockage |
| | | | Check burner fasteners and gaskets |
| | | | Check air intake pipe and proper propane orifice |
| GAS VALVE FAULT | The Control has detected a problem with it gas valve output circuit. | Reset using manual reset screen on control panel. (Power button) | Check wire harness connections between gas valve and Control. |
| | | | If lockout re-occurs replace Control. |

# SECTION 8. Maintenance



## ■ Regular Maintenance

- This Manual should be placed in a safe and dry location near the Combination boiler. Maintenance instructions should be carried out by the following guidelines.

## ■ Maintenance procedures [ Daily ]

**- Check that the boiler casing is closed.**
Check if there is any problem with the Combination boiler casing and the two upper and lower screws are tightened well. Combination boiler casing must be closed while it is running.

**⚠ WARNING**

To prevent potential severe personal injury, death or substantial property damage, remove all contaminated materials.
If contaminants are found:
Remove products immediately from the area.
In order to check the status of Combination boiler, call a qualified service technician to inspect the Combination boiler for possible damage from acid corrosion.

**⚠ WARNING**

DO NOT store combustible materials, gasoline or any other flammable vapors or liquids near the Water Heater. Remove them immediately or store them other places.

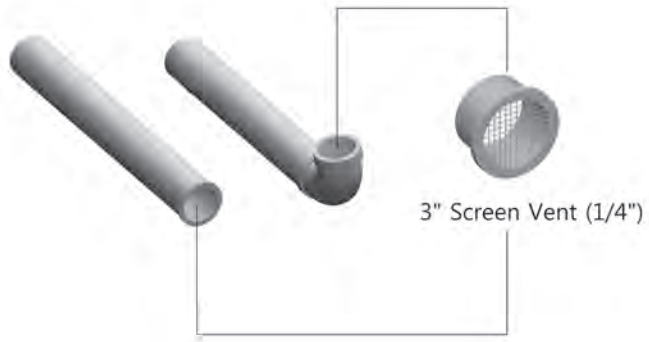


**- Check the power source**.
Make sure that the power cord is correctly connected. The main power line is connected to the manual switch box inside a Combination boiler. (Power line through the strain relief in the bottom of the combination boiler casing and fix it.)

**- Check the status of the control panel**
Check status of the power supply. Please check for any debris on the button.

## ■ Maintenance procedures [ Monthly ]

**- Check the vent pipe.**
Visually inspect the flue gas vent piping for detecting any signs of blockage, leakage or deterioration of the piping. Please contact a qualified service technician immediately if you find any problem.

**- Check the air inlet pipe.**
Visually inspect the air inlet to be sure it is unobstructed. Inspect entire length of air piping for ensuring that piping is intact and all joints are properly sealed. Call your qualified service technician if you notice any problems.

**- Check the relief valve.**
Inspect the Combination boiler relief valve and the relief valve discharge pipe for any signs of weeping or leakage. If the relief valve often weeps, immediately contact your qualified service technician for inspecting the Combination boiler and system.

**- Check the condensate outlet.**
While the Combination boiler is running, check the discharge end of the condensate drain tubing. Make sure that no flue gas is escaping from the condensate drain tubing.
If flue gas is continuously escaping, it is a serious problem. Call your qualified service technician for inspecting the Combination boiler and condensate line. Also, refill the condensate trap if problem persists regularly.

- **Check the vent terminal screen vent** (rodent screen).

If you encounter a problem of combustion specifications, visually inspect the terminal screen. And then replace it with spare parts or clean the screens.

# SECTION 8. Maintenance



**- Check the air vent**
If the air vent valve seems to work freely without leaking, replace cap “A” by twisting all the way on. Loosen cap “A” one turn to allow vent to operate. If vent does not operate correctly, replace the vent.

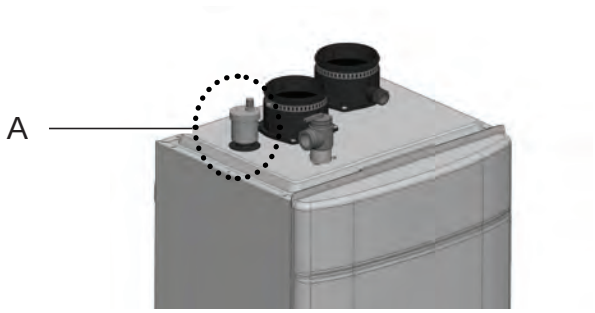


■ Maintenance procedures [Every 6 Months]

**- Check the boiler piping (gas and water)**
Visually inspect for leaks around internal water piping. Also inspect external water piping, circulators, relief valve and fittings. Immediately call a qualified service technician to repair any leaks. Leaks must be fixed by a qualified service technician immediately.
Failure to comply with this instruction could result in severe personal injury, death or substantial property damage.

**- Check the pressure relief valve**

> ⚠ WARNING
>
> Leaks must be fixed by a qualified service technician immediately. Failure to comply with this instruction could result in severe personal injury, death or substantial property damage. This discharge line must be installed by a qualified heating installer or a service technician.

Before proceeding, verify that relief valve outlet has been piped to a safe place of discharge, avoiding any possibility of scalding from hot water. If water flows freely, release the lever and allow the valve to seat. Watch the end of the relief valve discharge pipe to ensure that the valve does not weep after the line has had time to drain. If the valve weeps, lift the seat again to attempt to clean the valve seat. If the valve continues to weep, contact your qualified service technician for inspecting the valve and system. If water does not flow from the valve even though you have lifted the lever completely, the valve or discharge line may be blocked. Shut down the Combination boiler immediately. Call your qualified service technician to inspect the combination boiler and system.

**- Check the burner state**
You can clean the exterior of burner. However, if you need to clean the inside of the burner stage, you should call a qualified service technician.

## 8.2 Flushing the Combination Boiler

Flushing the Heat Exchanger is a complicated procedure that should only be done by an authorized technician or licensed professional. Keep in mind that improper maintenance can void your warranty.

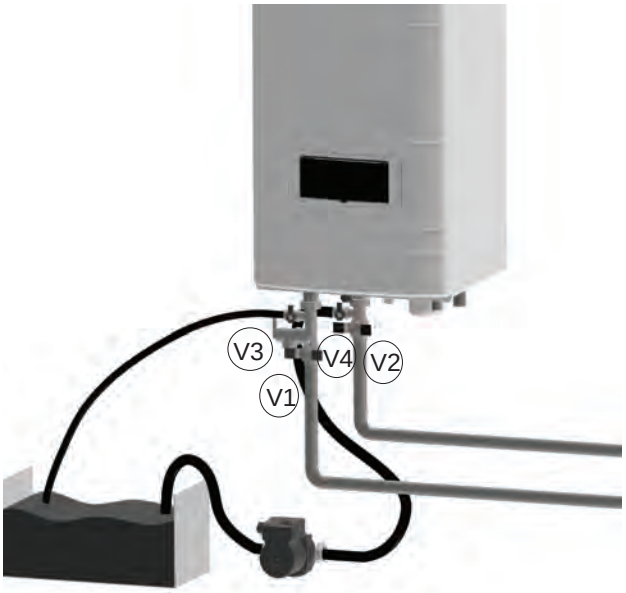


1. Disconnect electric power to the combination boiler.

2. Close the shutoff valves on both hot water outlet and cold water inlet lines. (V1 & V2)

3. Connect one hose “D1” to the valve “V3” and place the free end in the bucket. Connect one of the hoses “D3” to the circulation pump outlet and the cold water inlet line at the valve “V4”. Connect other hose “D2” to the circulation pump inlet and place the free end in the bucket.

4. Pour the cleaning solution into the bucket. Place the drain hose (D1) and the hose (D2) to the pump inlet into the cleaning solution.

5. Open service valves (V3 & V4) on the hot water outlet and cold water inlet lines.

6. Turn on the circulation pump (Operate the pump and allow the cleaning solution to circulate through the combination boiler for at least 1 hour at a rate of 4 gallons per minute.)

7. Rinse the cleaning solution from the combination boiler as follows:
   - Remove the free end of the drain hose (D1) from the bucket.
   - Close service valve, (V4), and open shut off valve, (V2).
     Do not open shut off valve, (V1).
   - Allow water to flow through the combination boiler for 5 minutes.
   - Close shut off valve (V2).

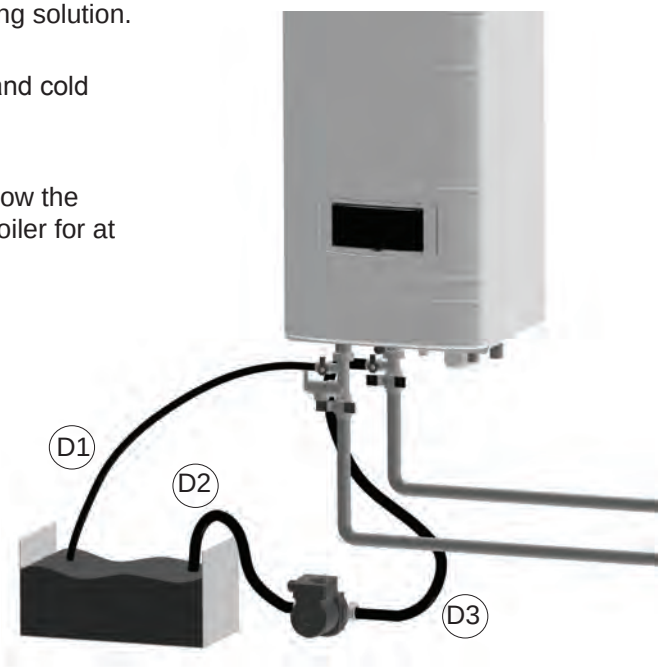


8. Disconnect all hoses.

9. Remove the cold water inlet filter from the combination boiler and clean out any residues.

10. Reinsert the filter and ensure the filter cap is securely tightened.

11. Connect electrical power to the combination boiler.

## 8.3 Draining and Cleaning

1. Place a bucket under the appliance to collect the residual water inside the combination boiler.
2. Press the Power button on the front control panel to turn OFF the electrical power to the combination boiler.
3. Turn off the gas valve.
4. Close water supply valve on the inlet to the appliance. If there is no valve, turn off main water valve.
5. Open the hot water faucets completely.

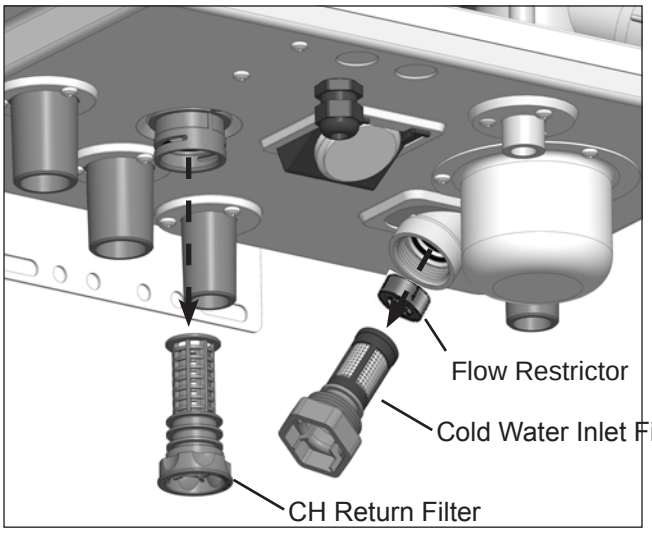


FTCW140

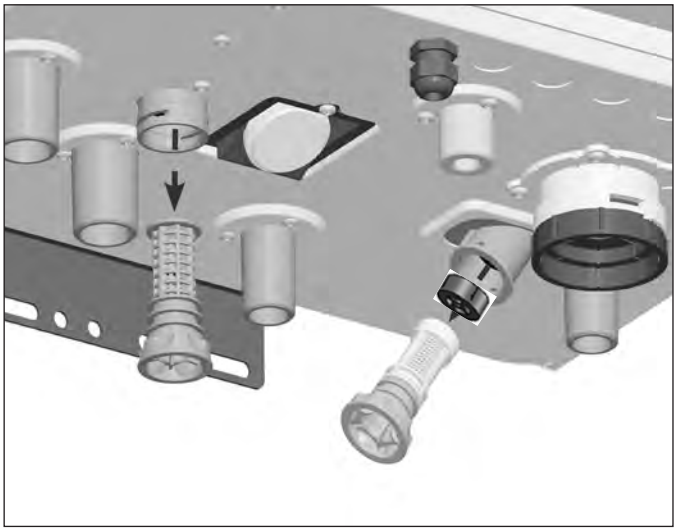

FTCW199

6. Remove the CH (Central Heat) return filter by removing the metal pin and then pulling the filter downward.
7. Remove the Cold Water Inlet filter by removing the two small pins and then pulling the filter downward at an angle. If your system is using a flow restrictor, be sure that the flow restrictor is also cleaned and placed back into the system during re-assembly.
8. Clean them with a toothbrush and clean running water.

8. To refill the combination boiler, reassemble the filters back into the combination boiler and reverse steps 7 back to 1.

# Section 9 – Installation Check

## 9.1 Quick View

■ Before Installing
- Make sure that there is enough space for installing Water and gas line.
  Verify vent/air termination is located as required.
- All models need for propane Conversion which requires a separate gas conversion manual.

■ Install Water Piping
- Boiler loop piping must be sized to the minimums listed in the Boiler manual. Using smaller piping will cause performance problems.(page 34)

■ Install Vent & Air Piping
- Slide the air inlet pipe and vent pipe into the Boiler pipe connector.
- Make sure the terminations are placed as required in the manual and that air intakes are at least 12 inches above normal snow line.
- Refer to the material check list in this guide for a list of items needed.

■ Install Condensate Piping / Tubing & Components
- Fill out the material check list in this guide to ensure you have the tubing or PVC pipe and all components needed for the condensate piping.
- Connect internal components that are supplied with the Boiler.

■ Install Gas Piping
- Install a union and shutoff valve.

■ Wire the Boiler
- Connect power wiring and control wiring per boiler manual wiring diagram.(Section 4.19)

■ Start up, Adjust & Test
- Follow the Boiler manual instructions to clean the system if needed, then fill and check water chemistry.

## 9.2 Final Check Lists

■ Final check : Installation Conditions.
- Is the Boiler properly mounted on the wall?
- Is there space for a drain which is close to the Boiler?
- Are there any combustible materials near the Boiler and vent pipe?
- Is the air supply sufficient for proper operation of the Boiler?
- Are the proper service clearances maintained?
- Is the distance between the Boiler and point of vent termination minimized?
- Is the proper distance from windows, doors, and other intake vents maintained?

■ Final check : Gas pipe installation
- Is the gas supply line equipped with a manual shut off valve?
- Is the gas supply line a minimum of 3/4″ inner diameter?
- Is the gas supply line length and diameter adequate to deliver the required BTU's?
- Has the gas supply line pressure been measured?
- Does the supply gas type match the type indicated on the boiler rating plate?

■ Final check: Air/Vent pipe installation
- Has the Boiler been vented with 3″ or 2” PVC, CPVC, Polypropylene or BH Special Gas Vent (S636 PVC, CPVC) for Category IV appliances in accordance with this manual and/or your local code?
- Is the vent termination at least 12″ above the exterior grade?
- Is the total vent length within the maximum vent length restriction?
- Have you checked the air/vent piping for leaks?
- Have you properly supported the vent termination?
- Are all vent runs properly supported?
- Is the vent sloped upward toward the vent termination at a rate of 1/4″ per foot (2% grade)?

■ Final check : Condensate drain installation
- Have you installed a condensate drain line from the Boiler to a drain or laundry tub?

■ Final check : Setting the DIP switches
- Are all DIP switches correctly set on the main board?

## 9.2 Final Check Lists (continued)

■ Final check : Connecting the power supply
- Please check that the power is 120V AC.
- Have you checked the polarity of the electrical connection?

■ Final check : Pressure relief valve
- Have you installed an approved pressure relief valve on the boiler?
- Is the pressure relief valve of CH Plumbing at least 1″ in diameter?
- Is the pressure relief valve of DHW Plumbing at least 3/4″ in diameter?
- Have you installed the pressure relief valve on the hot water outlet pipe near the Boiler?

■ Final check : Burner flames
- The burner flame must be checked periodically for a constant proper blue color.
- If the flame does not appear normal, the burner may need to be cleaned.
- If the burner needs to be cleaned, it must be performed by a qualified service technician.

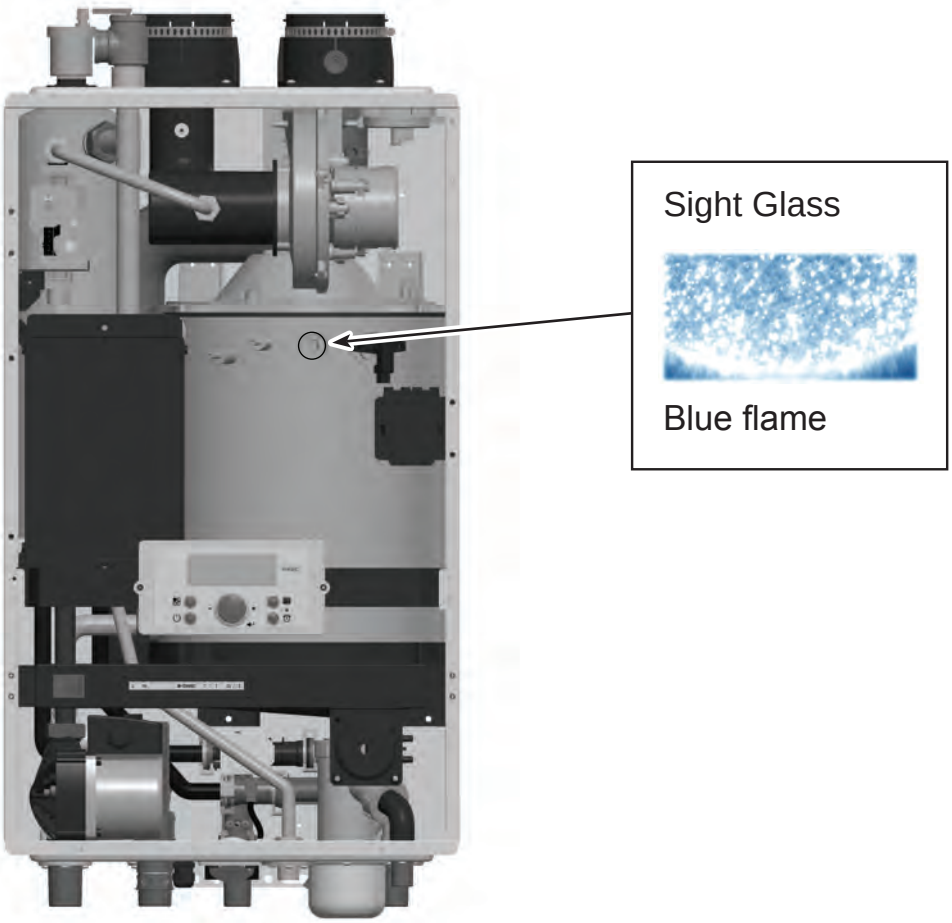

# SECTION 10. Parts List and Illustrations

## FTCW140

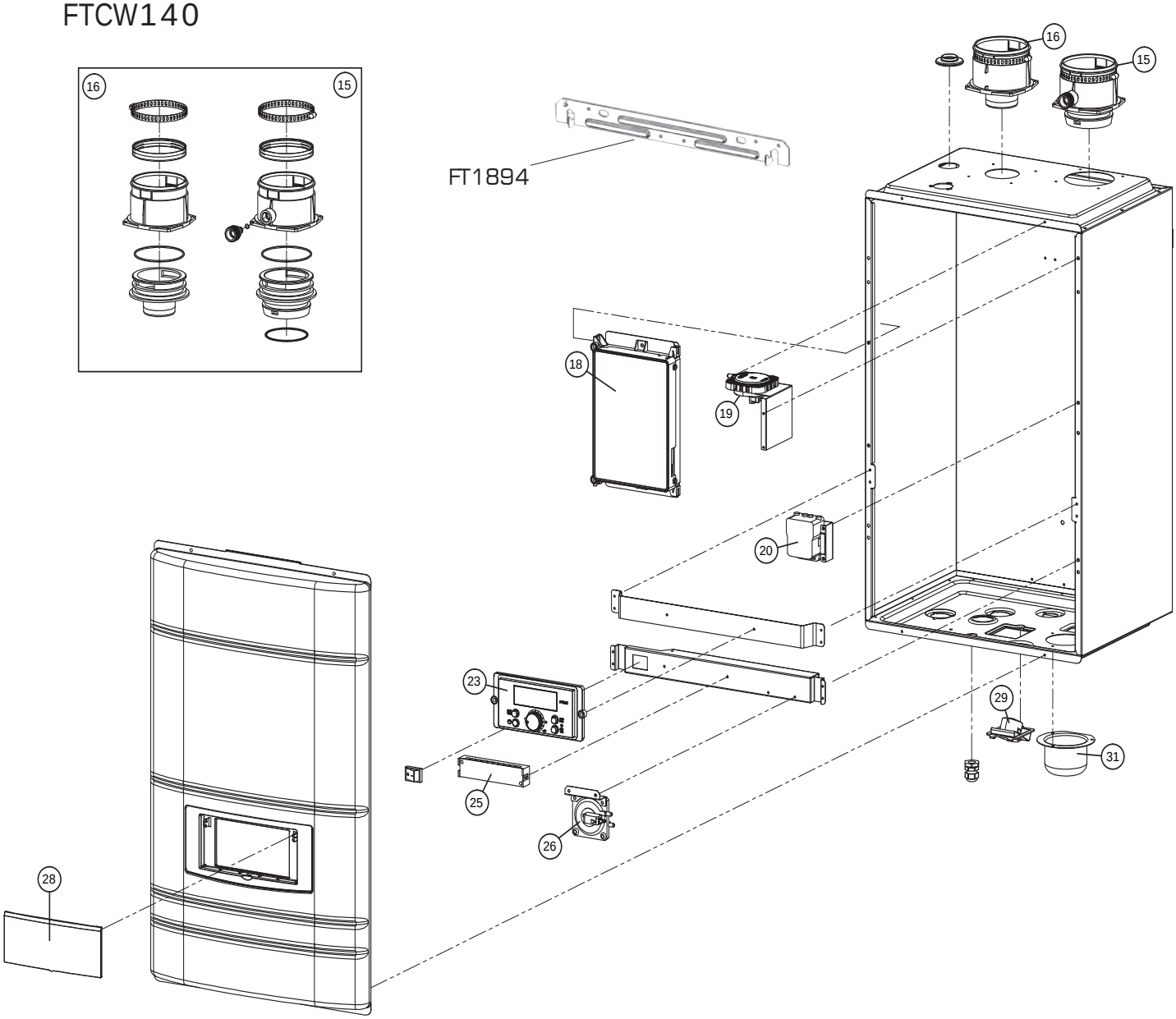


| IOM Ref | Part Number | Description |
|---|---|---|
| 15 | FT1002 | Exhaust Duct Assembly |
| 16 | FT1010 | Air Intake Duct Assembly |
| 18 | FT1014 | Control |
| 19 | FT1015 | Air pressure switch |
| 20 | FT1016 | Ignition transformer |
| 23 | FT1019 | Display Panel |
| 25 | FT1021 | Terminal Block |
| 26 | FT1022 | Condensate Blockage, Air Pressure switch |
| 28 | FT1024 | Display cover window |
| 29 | FT1025 | Pressure gauge |
| 31 | FT1027 | Condensate trap cover |

FTCW140

| IOM Ref | Part Number | Description |
|---|---|---|
| A1 | FT1100 | DHW Hydro block Assembly |
| 33 | FT1517 | DHW Outlet Pipe |
| 35 | FT1519 | DHW nipple |
| 36 | FT1112 | Outlet sensor |
| 38 | FT1521 | DHW Inlet Pipe |
| 39 | FT1115 | Flow sensor |
| 40 | FT1116 | Mixing valve |
| 43 | FT1119 | Flow restrictor |
| 44 | FT1120 | DHW filter mash |
| 45 | FT1121 | DHW filter Cap |
| 47 | FT1122 | DHW connector |
| A2 | FT1200 | CH hydro Block Assembly |
| 55 | FT1526 | CH return pipe |
| 56 | FT1219 | CH return sensor |
| 57 | FT1220 | 3-way valve |
| 58 | FT1527 | CH supply pipe |
| 59 | FT1222 | Pump |

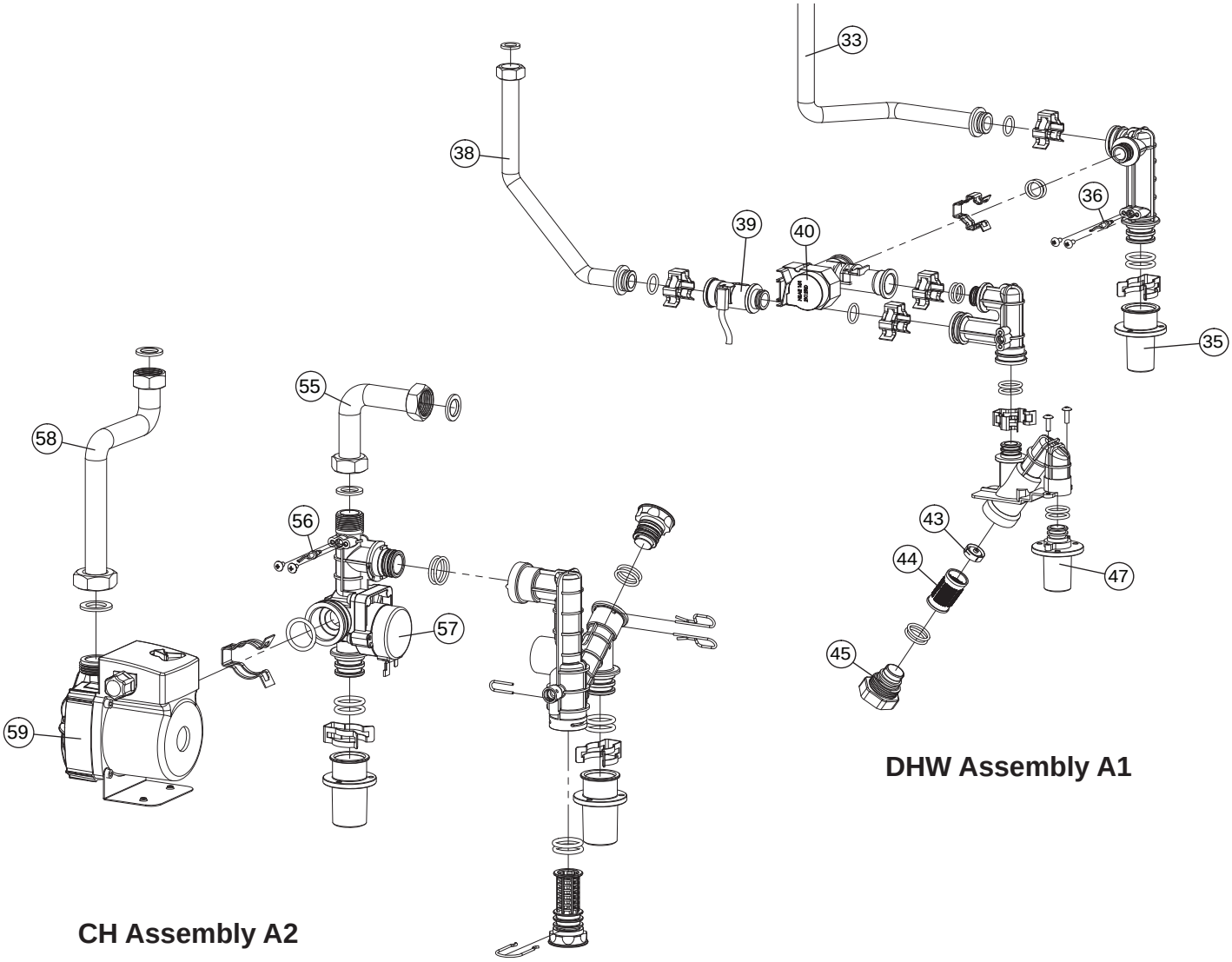


**DHW Assembly A1**

**CH Assembly A2**

# FTCW140

## Heat Exchanger & Tank

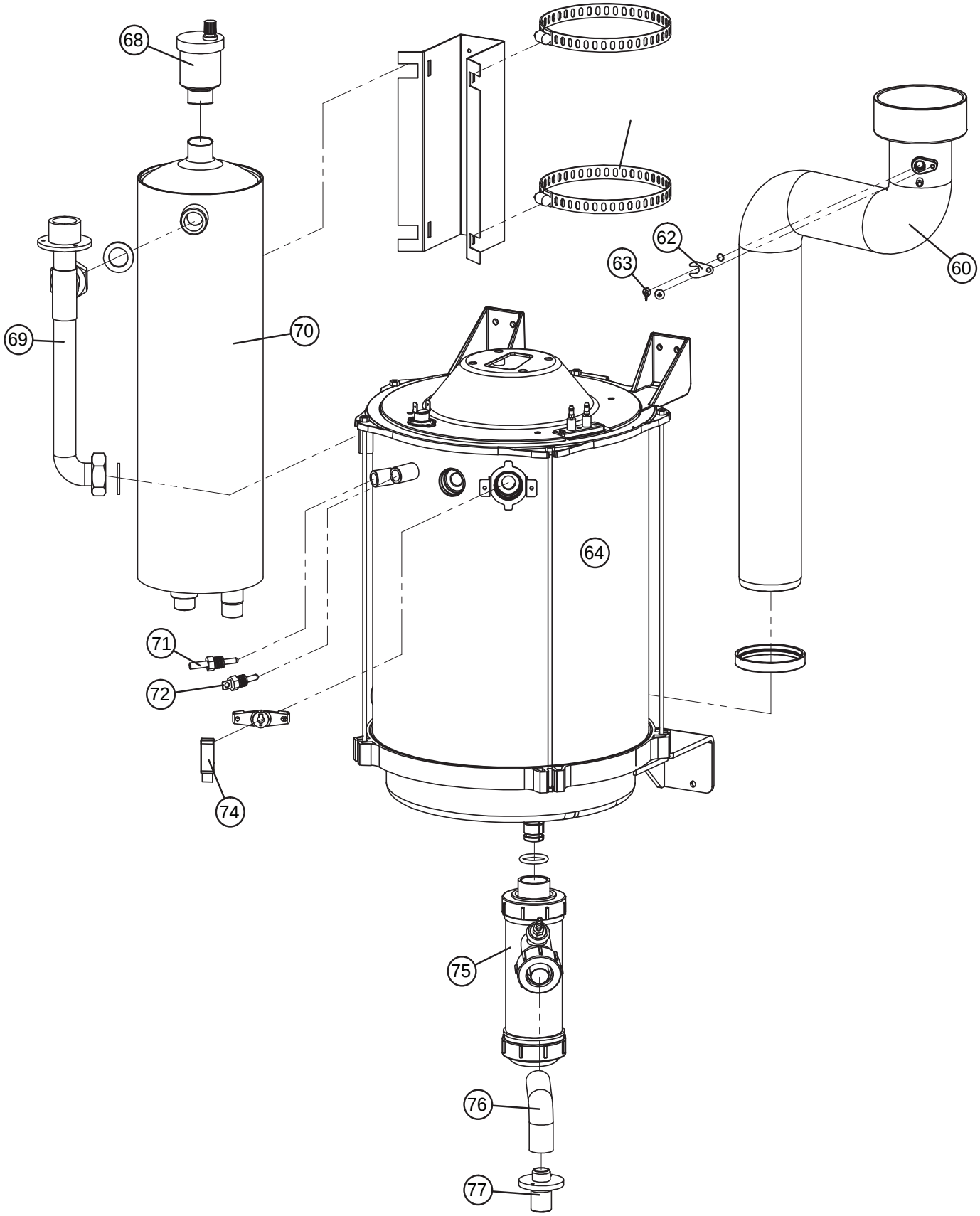

# FTCW140

| IOM Ref | Part Number | Description |
|---|---|---|
| 60 | FT1304 | Exhaust Pipe |
| 62 | FT1306 | Exhaust sensor BK |
| 63 | FT1307 | Exhaust overheat sensor |
| 64 | FT1068 | Heat Exchanger Assembly |
| 65 | FT1309 | Burner Assembly |
| 65-1 | FT1310 | Over heat Sensor |
| 65-4 | FT1313 | Burner |
| 65-6 | FT1315 | Igniter |
| 65-7 | FT1316 | Ignitor gasket |
| 65-8 | FT1665 | Refractory |
| 68 | FT1321 | Air vent |
| 69 | FT1322 | CH supply upper pipe |
| 70 | FT1323 | DHW tank |
| 71 | FT1324 | Temperature sensor |
| 72 | FT1325 | Low level sensor |
| 74 | FT1327 | Flame detector sensor |
| 75 | FT1328 | Condensate trap |
| 76 | FT1329 | Condensate trap hose |
| 77 | FT1330 | Condensate trap connector |

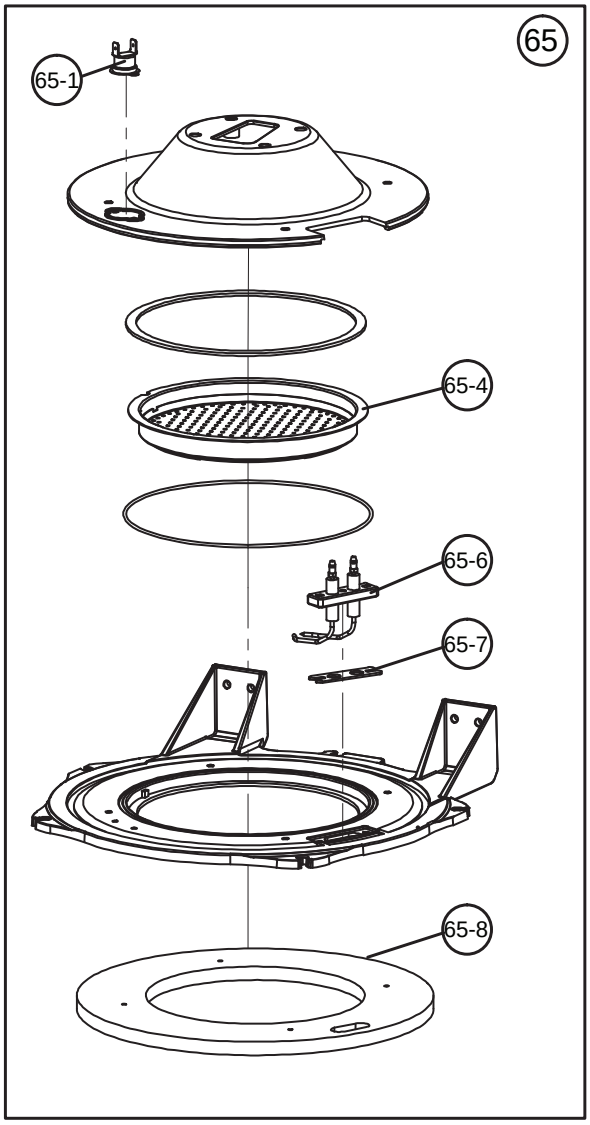

# FTCW140

## Blower and Gas Valve

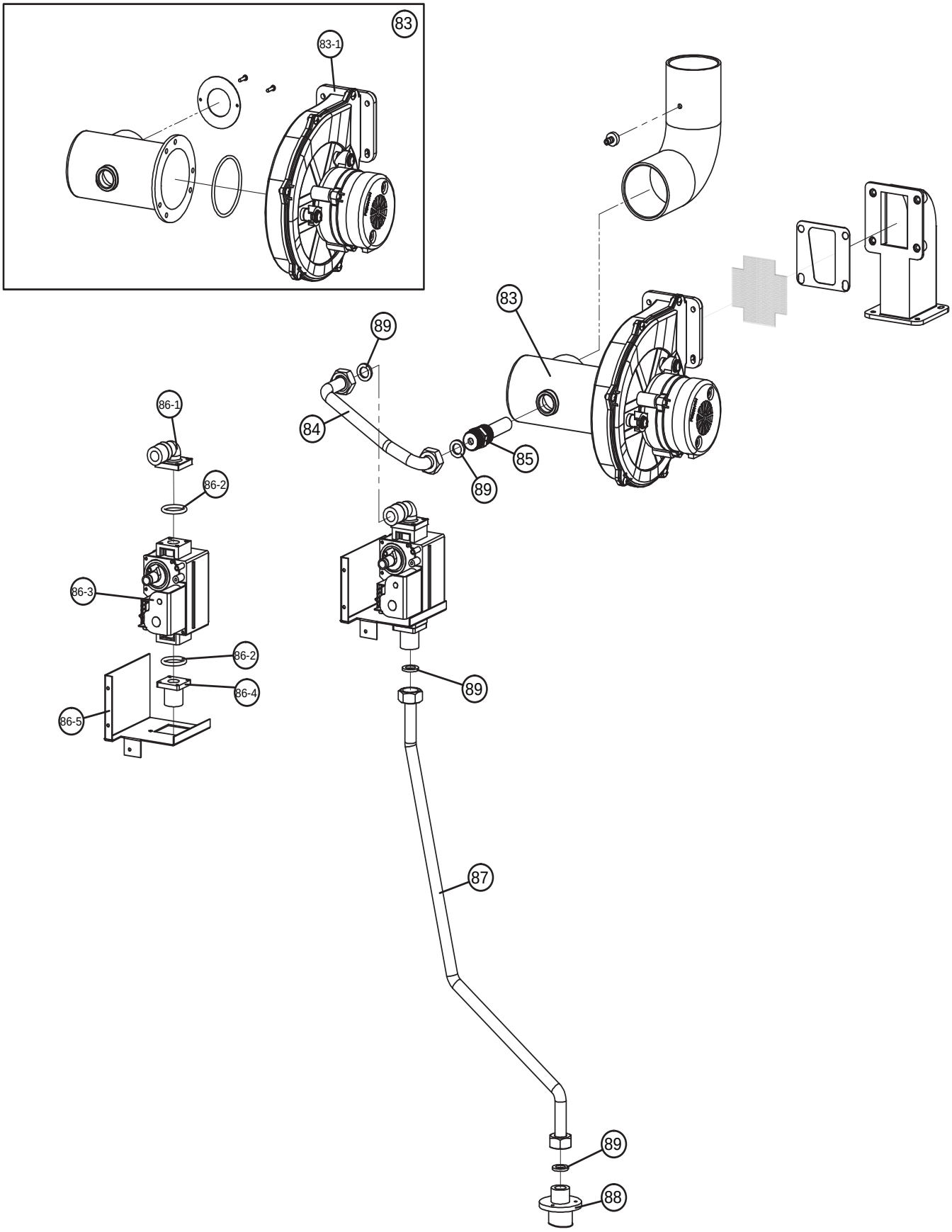

# FTCW140

| IOM Ref | Part Number | Description |
|---|---|---|
| 83 | FT1405 | Blower Assembly |
| 83-1 | FT1406 | Blower |
| 83-2 | FT1409 | Housing, Gas Mixer |
| 83-3 | FT1716 | O-Ring, Fan Sealing |
| 85 | FT1412N | Nozzle (natural, NG) |
| 85 | FT1412P | Nozzle (propane, LP) |
| 86_1 | FT1728 | Gas valve outlet adaptor |
| 86_2 | FT1415 | Gas valve O-Ring |
| 86_3 | FT1416 | Gas valve |
| 86_4 | FT1538 | Gas valve inlet adaptor |
| 86_5 | FT1418 | Gas valve BK |
| 87 | FT1419 | Gas pipe (down) |
| 88 | FT1420 | Gas inlet adaptor |
| 89 | FT1421 | Packing |

OPTIONAL ITEMS

| | | |
|---|---|---|
| 90 | FT1500 | Pressure Relief Valve |
| 91 | FT1501 | Outdoor Temp. Sensor |
| 92 | FT1502 | Bird Screen 3" |
| 93 | FT1503 | Gas Reducing Coupling |
| 94 | FT1504 | Spare Parts Kit |
| 95 | FT1505 | Condensate Hose |
| 96 | FT1506 | Restrictor(5L) |
| 97 | FT1507 | Wall Hung Bracket |
| 98 | FT1508 | Bird Screen 2" |
| 99 | FT1509 | Heat Exchanger Long Bolt |

# FTCW199

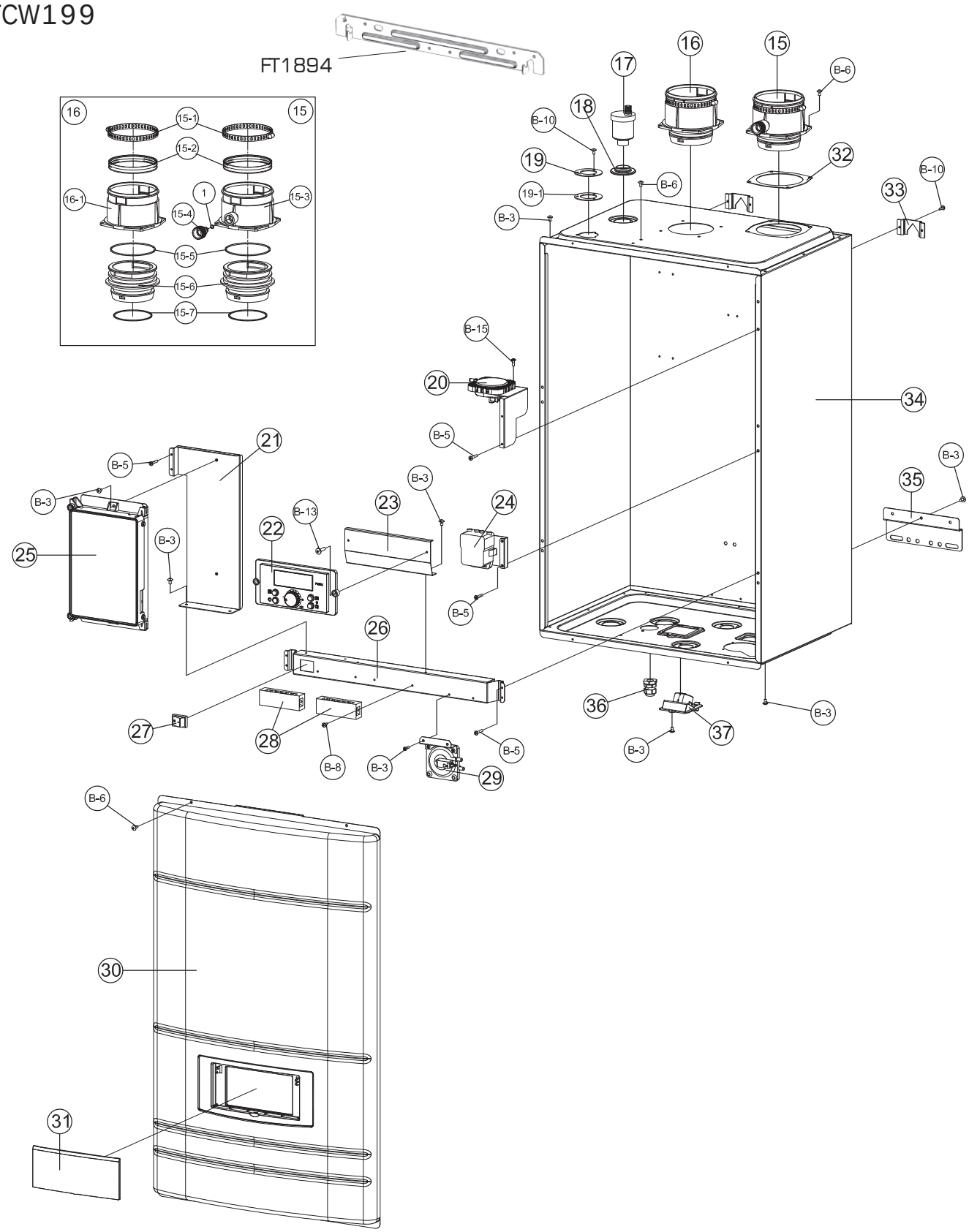
FT1894
16
15
17
B-6
18
B-10
19
19-1
B-6
32
B-10
33
B-3
16
15
15-1
15-2
16-1
1
15-3
15-4
15-5
15-6
15-7
B-15
20
34
B-5
21
B-5
B-3
B-3
35
B-3
B-3
23
24
B-13
22
25
B-3
B-5
26
36
B-3
27
28
37
B-5
B-8
B-3
29
B-3
B-6
30
31

## FTCW199

| IOM Ref | Part Number | Description |
|---|---|---|
| 1 | FT1601 | O-Ring P7 |
| B-3 | FT1614 | M4*8 TH+ tapping |
| B-5 | FT1544 | M4*10 FH+ tapping |
| B-6 | FT1719 | M4*10 TH+ tapping |
| B-8 | FT1545 | M4*10 Plat Head |
| B-10 | FT1534 | M4*12 TH+ M/S |
| B-13 | FT1547 | M4*16 TH+ tapping |
| B-15 | FT1814 | M4*20 TH+ tapping |
| 15 | FT1002 | Exhaust Vent Duct Ass'y |
| 15-1 | FT1603 | Stainless band Φ100 |
| 15-2 | FT1604 | Exhaust packing |
| 15-3 | FT1605 | Exhaust vent duct |
| 15-4 | FT1606 | Exhaust testing cap |
| 15-5 | FT1607 | O-Ring P85 |
| 15-6 | FT1608 | Exhust adaptor |
| 15-7 | FT1609 | O-Ring P75 |
| 16 | FT1800 | Air Inlet Duct Ass'y |
| 16-1 | FT1611 | Air inlet Duct |
| 17 | FT1321 | Air vent |
| 18 | FT1548 | Air vent rubber cap |
| 19 | FT1797 | Gasket BK |
| 19-1 | FT1013 | Safety valve rubber pad |
| 20 | FT1804 | Air Pressure sensor |
| 21 | FT1751 | Control BK |
| 22 | FT1801 | Control Display (P-920C) |
| 23 | FT1752 | Panel BK |
| 24 | ST1006 | Ignition transformer |
| 25 | FT1014 | PCB(NGTX-920CP) |
| 26 | FT1795 | Bracket |
| 27 | FT1020 | Power switch |
| 28 | FT1827 | Terminal Blocks |
| 29 | FT1022 | Condensate blockage, Air press switch |
| 30 | FT1790 | Front cover |
| 31 | FT1024 | Display cover window |
| 32 | FT1771 | Intake/exhaust sealing pad |
| 33 | FT1055 | Wall mount bracket (top) |
| 34 | FT1791 | Casing ASS'Y |
| 35 | FT1057 | Wall mount bracket (lower) |
| 36 | FT1633 | Wire adaptor |
| 37 | FT1025 | Pressure gauge |

FTCW199

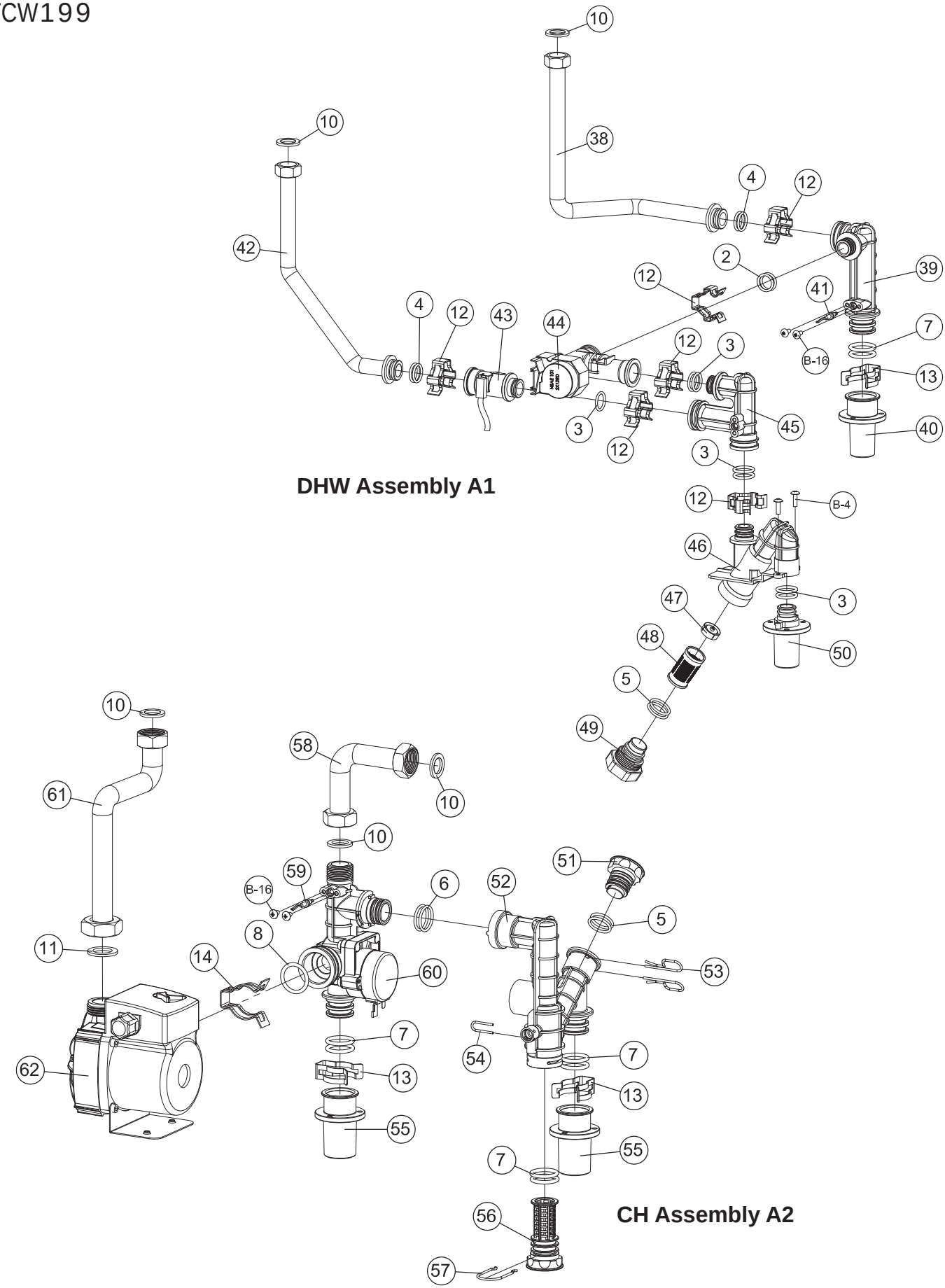


DHW Assembly A1

CH Assembly A2

# FTCW199

| IOM Ref | Part Number | Description |
|---|---|---|
| 2 | FT1685 | O-Ring P15 |
| 3 | FT1643 | O-Ring P16 |
| 4 | FT1687 | O-Ring P18 |
| 5 | FT1513 | O-Ring P20 |
| 6 | FT1644 | O-Ring P22 |
| 7 | FT1515 | O-Ring P22A |
| 8 | FT1516 | O-Ring P25 |
| 10 | FT1646 | 3/4" packing |
| 11 | FT1691 | 1" packing |
| 12 | FT1208 | Water flow sensor clip |
| 13 | FT1107 | Pipe clip |
| 14 | FT1108 | Pump clip |
| B-4 | FT1520 | M4*8 TH+ M/S |
| B-16 | FT1817 | M4*9 PH.PW+ Self Tapping |

## DHW Assembly A1

| | | |
|---|---|---|
| 38 | FT1805 | DHW pipe |
| 39 | FT1518 | DHW ‘T’ pipe |
| 40 | FT1519 | DHW nipple |
| 41 | FT1112 | Outlet sensor |
| 42 | FT1806 | DHW inlet pipe |
| 43 | FT1115 | Flow sensor |
| 44 | FT1116 | Mixing valve |
| 45 | FT1522 | DHW inlet block |
| 46 | FT1549 | DHW inlet filter body |
| 47 | FT1822 | Flow restrictor |
| 48 | FT1120 | DHW inlet mash |
| 49 | FT1121 | DHW filter Cap |
| 50 | FT1122 | DHW nipple |

## CH Assembly A2

| | | |
|---|---|---|
| 51 | FT1121 | Return block cap |
| 52 | FT1523 | Return block |
| 53 | FT1524 | ‘R’ clip |
| 54 | FT1525 | Pressure gauge clip |
| 55 | FT1215 | CH return, supply connector |
| 56 | FT1216 | CH filter |
| 57 | FT1217 | U Clip |
| 58 | FT1807 | CH return pipe |
| 59 | FT1219 | CH return sensor |
| 60 | FT1220 | 3way valve |
| 61 | FT1808 | CH supply pipe |
| 62 | FT1798 | Pump (top case+bk) |

# FTCW199

## Heat Exchanger & Tank

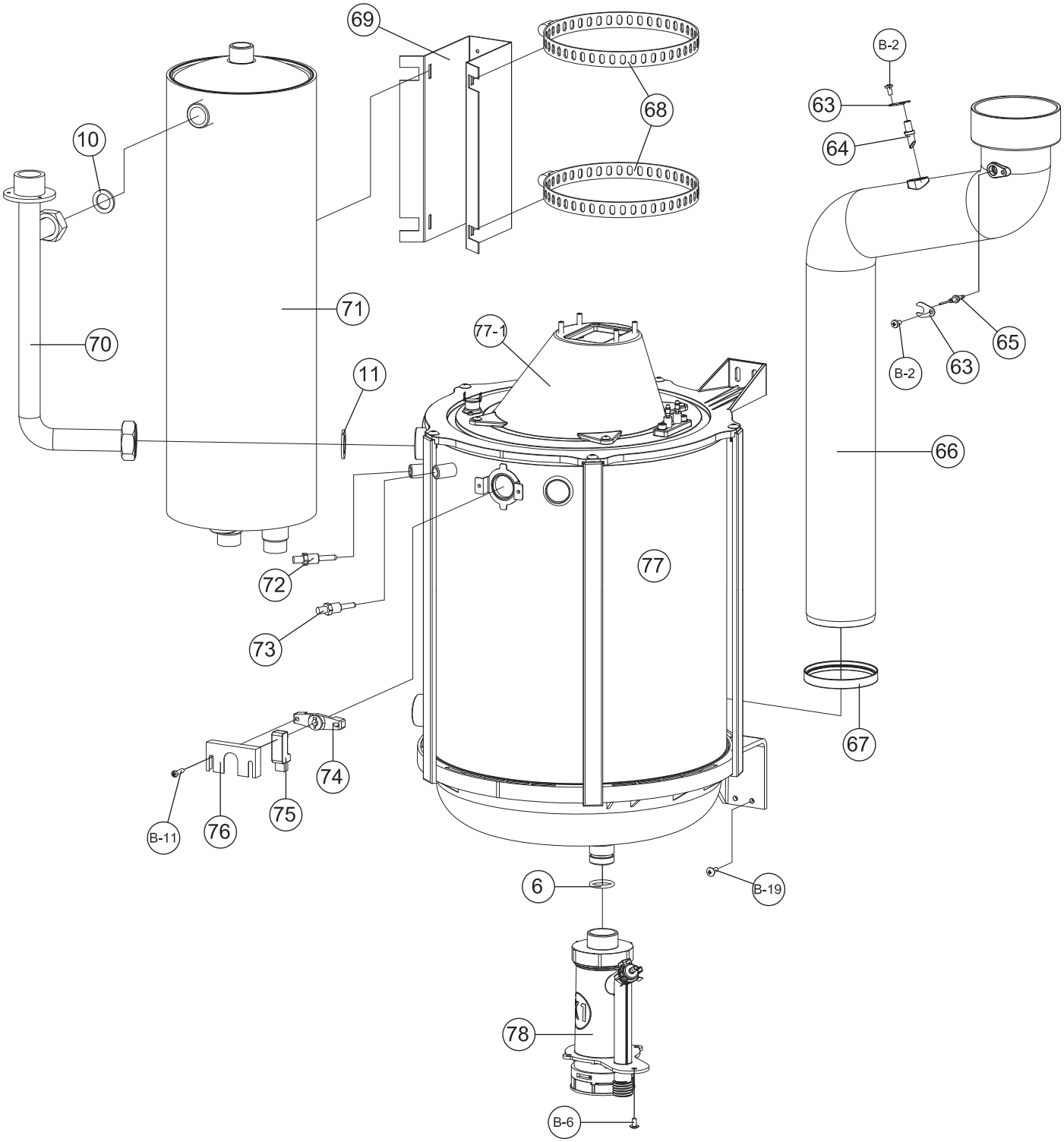

# FTCW199

| IOM Ref | Part Number | Description |
|---|---|---|
| 6 | FT1644 | O-Ring p22 |
| 10 | FT1646 | 3/4" Packing |
| 11 | FT1691 | 1" Packing |
| B-1 | FT1062 | M3*6 PH+ M/S |
| B-2 | FT1063 | M4*8 BH+ tapping |
| B-6 | FT1719 | M4*10 TH+ tapping |
| B-17 | FT1816 | M5*10 TH+ M/S |
| B-18 | FT1820 | M5*12 BH+ tapping |
| B-19 | FT1815 | M5*12 BH+ M/S |
| B-21 | FT1818 | M4*13.5 Wrench Bolt + Spring Washer + Flat Washer |
| 63 | FT1306 | Exhaust sensor BK |
| 64 | FT1784 | Exhaust-adaptor |
| 65 | FT1307 | Exhaust sensor |
| 66 | FT1823 | Exhaust pipe |
| 67 | FT1825 | Inner pipe_bottom packing |
| 68 | FT1813 | Stainless band |
| 69 | FT1793 | DHW tank BK |
| 70 | FT1809 | CH supply pipe (top) |
| 71 | FT1794 | DHW tank ASS'Y |
| 72 | FT1324 | Temperature sensor |
| 73 | FT1325 | Low level sensor |
| 74 | FT1669 | Photo sensor BK |
| 75 | FT1327 | Photo sensor |
| 76 | FT1069 | Photo sensor cover |
| 77 | FT1792 | Heat exchanger ASS'Y |
| 77-1 | FT1796 | Burner ASS'Y |
| 77-2 | FT1760 | Burner case(top) |
| 77-3 | FT1824 | Burner gasket |
| 77-4 | FT1838 | Burner |
| 77-5 | FT1763 | Igniter |
| 77-6 | FT1663 | Igniter gasket |
| 77-7 | FT1310 | Overheat sensor |
| 77-8 | FT1764 | Burner case (bottom) |
| 77-9 | FT1826 | Refractory FT-175W thru FT-199W |
| 78 | FT1783 | Condensate trap ASS'Y |

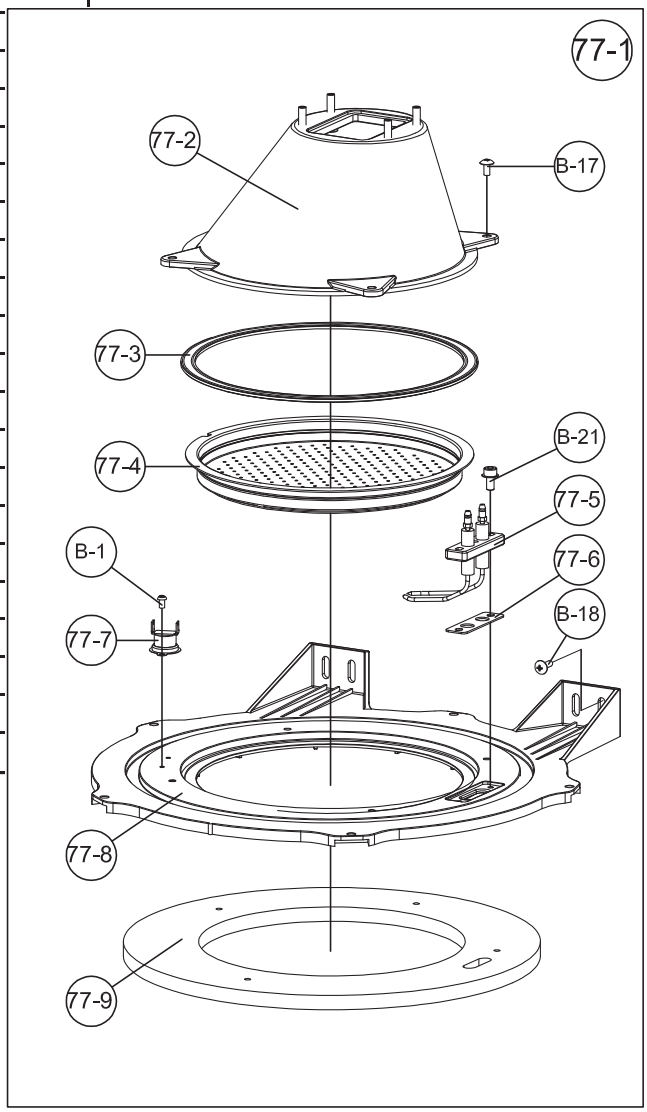

# FTCW199

## Blower and Gas Valve

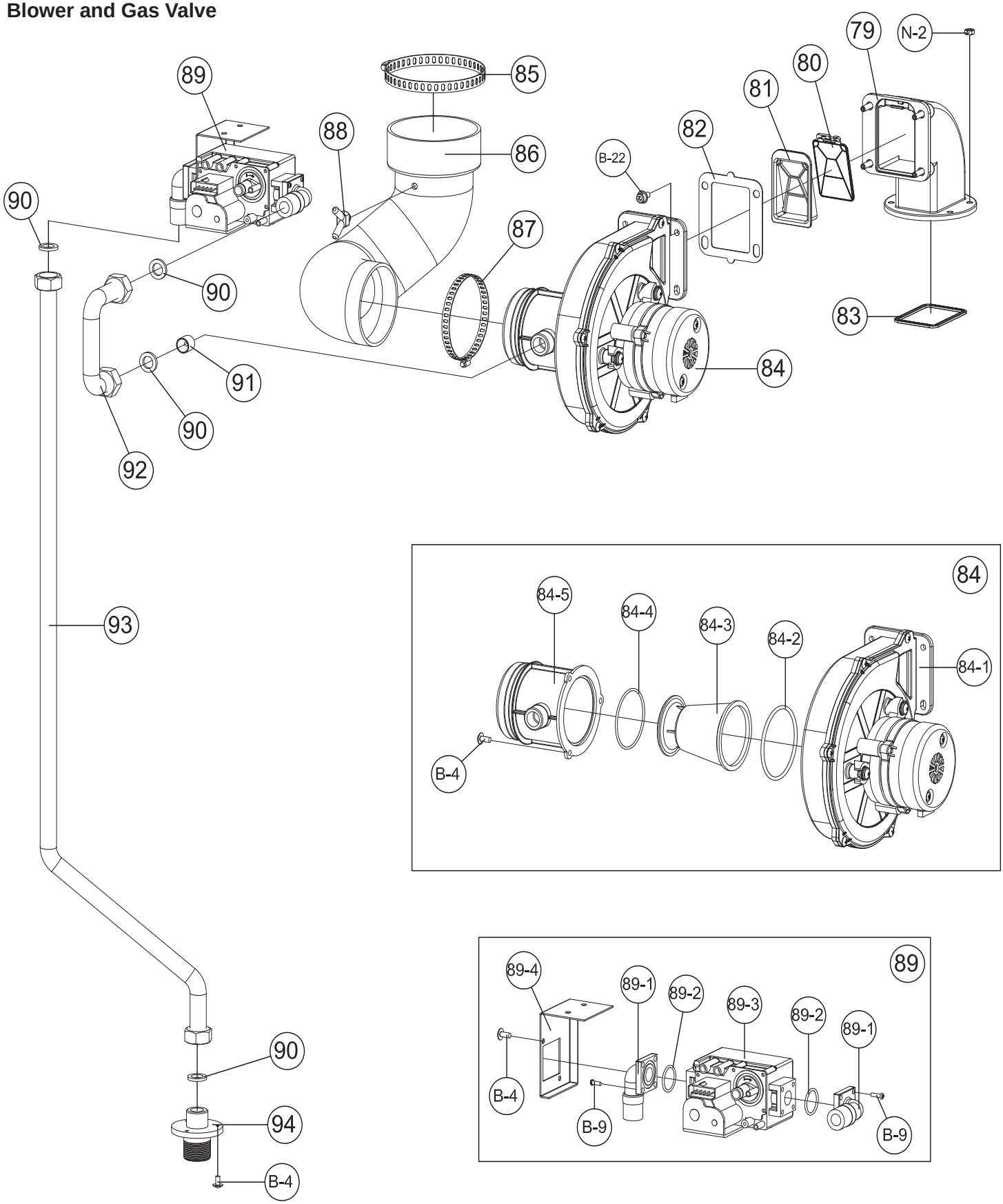

## FTCW199

| IOM Ref | Part Number | Description |
|---|---|---|
| N-2 | FT1074 | M5 NUT |
| B-4 | FT1779 | M4*8 TH+ M/S |
| B-9 | FT1076 | M4*12 PH+ M/S |
| B-22 | FT1819 | M5*15 Wrench Bolt + Flat Washer |
| 79 | FT1769 | Fan guide |
| 80 | FT1770 | Damper packing |
| 81 | FT1081 | Damper body |
| 82 | FT1082 | Fan rubber pad |
| 83 | FT1772 | Fan guide packing |
| 84 | FT1799 | Fan ASS'Y |
| 84-1 | FT1803 | Fan |
| 84-2 | ST1038 | Fan sealing O-ring |
| 84-3 | FT1773 | AGM VENTURI |
| 84-4 | FT1774 | AGM O-ring |
| 84-5 | FT1775 | AGM BODY |
| 85 | FT1603 | Stainless band Ø100 |
| 86 | FT1812 | Air intake hose |
| 87 | FT1777 | stainless Ø89 |
| 88 | FT1821 | Air intake orifice |
| 89 | FT1778 | Gas valve ASS'Y |
| 89-1 | FT1728 | Gas valve outlet |
| 89-2 | FT1727 | Gas valve O-ring |
| 89-3 | FT1750 | Gas valve |
| 89-4 | FT1779 | Gas valve BK |
| 90 | FT1421 | 1/2" Packing |
| 91 | FT1780 | Orifice (natural) |
| 91 | FT1802 | Orifice (propane) |
| 92 | FT1810 | Gas pipe (up) |
| 93 | FT1811 | Gas pipe (down) |
| 94 | FT1087 | Gas inlet nipple |

Notes:

For Product and Service VIDEOS

*Dimensions and specifications subject to change without notice in accordance with our policy of continuous product improvement.*

H2372800F

***Customer Service and Product Support:*** **800.900.9276 • Fax 800.559.1583**
**20 Industrial Way, Rochester, NH, USA 03867**