HEAT CONTROLLER, INC.

OWNER'S MANUAL

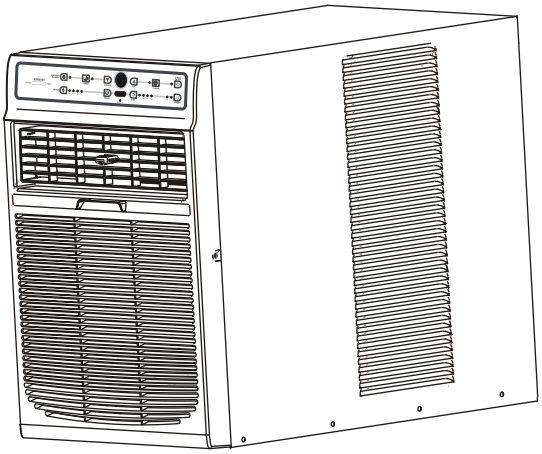

Room Air Conditioner with R-410A:

CD-101J

CD-121J

Heat Controller, Inc. • 1900 Wellworth Ave. • Jackson, MI 49203 • (517)787-2100 • www.heatcontroller.com

CONTENTS

1. SAFETY PRECAUTIONS.....2

2. IMPORTANT SAFETY INSTRUCTIONS 4

3. NORMAL SOUNDS 5

4. AIR CONDITIONER FEATURES 5

5. INSTALLATION INSTRUCTIONS.....10

6. CARE AND CLEANING 19

7. TROUBLESHOOTING TIPS.....20

Read This Manual

Inside you will find many helpful hints on how to use and maintain your air conditioner properly. Just a little preventive care on your part can save you a great deal of time and money over the life of your air conditioner. You'll find many answers to common problems in the chart of troubleshooting tips. If you review our chart of Troubleshooting Tips first, you may not need to call for service at all.

⚠ CAUTION

- Contact an authorized service technician for repair or maintenance of this unit.
- Contact an authorized installer for installation of this unit.
- If the power cord needs to be replaced, replacement work shall be performed by authorized service personnel only.
- Installation work must be performed in accordance with the national and local electric codes and must be performed by authorized personnel only.

Safety Precautions

To prevent injury to the user and propert damage, the following instructions must be followed. Incorrect operation due to ignoring instructions may cause harm or damage. The seriousness is classified by the following indications.

⚠ **WARNING**	This symbol indicates the possibility of death or serious injury.
⚠ **CAUTION**	This symbol indicates the possibility of injury or damage to property.

■ Meanings of symbols used in this manual are as shown below.

⃠	**Never do this.**
!	**Always do this.**

⚠ WARNING

Plug in power cord plug properly

- Otherwise, it may cause electric shock or fire due to excess heat generation

Do not open the unit during operation

- It may cause electric shock

Always ensure effective grounding

- Incorrect grounding may cause electric shock

Do not modify power cord length or share the outlet with other appliances.

- It may cause electric shock or fire due to heat generation

Do not operate or stop the unit by inserting or pulling out the power plug

- It may cause electric shock or fire due to heat generation

Unplug the unit if strange sounds, odors or smoke comes from it.

- It may cause fire and electric shock

Do not operate with wet hands or in a damp environment

- It may cause electric shock

Do not use the power cord close to heating appliances

- It may cause fire and electric shock

Do not allow water to run in to electric parts

- It may cause failure of machine or electric shock

Unplug the unit if strange sounds, odors or smoke comes from it.

- It may cause fire and electric shock

Always install circuit breaker and a dedicated power circuit

- Incorrect installation may cause fire and electric shock

Do not use the socket if it is loose or damaged

- It may cause fire and electric shock

Do not use a damaged or unspecified power cord

- It may cause electric shock or fire
- If the power cord is damaged, it must be replaced by the manufacturer or an authorized serivce center or a qualified person in order to avoid a hazard

Do not disassemble or modify unit.

- It may cause failure and electric shock

Do not use the power cord near flammable gas or combustiblies, such as gasoline, benzene, thinner, etc.

- It may cause an explosion or fire

⚠ CAUTION

When the air filter is to be removed, do not touch the metal parts of the unit

- It may cause an injury due to sharp edges of components.

Do not allow water to enter inside the unit during cleaning

- Water may enter the unit and degrade the insulation. It may cause an electric shock

Ventilate the room well when used together with a gas stove or if there is a gas leak

- An oxygen shortage may occur
- May cause explosion, fire and/or burns

When the unit is to be cleaned, switch off, and turn off the circuit breaker

- Do not clean unit when power is on as it may cause fire and electric shock

Hold the plug by the head of the power plug when taking it out

- It may cause electric shock and damage

Turn off the main power switch when not using the unit for a long time

- It may cause failure of product or fire

Stop operation and close the window in storm or hurricane

- Operation with windows opened may allow rain to enter inside and damage property

Ensure that the installation bracket of the outdoor appliance is not damaged

- If bracket is damaged, there is concern of damage due to falling of unit.

Always insert the filters securely. Clean filter once every two weeks

- Operation without filters may cause failure
- Operation with dirty/clogged filters may cause failure

Do not place obstacles around air-inlets or inside of air-outlet

- It may cause failure of appliance or accident

Do not place heavy object on the power cord and ensure that the cord is not compressed

- There is danger of fire or electric shock

Do not drink water drained from air conditioner

- It contains contaminants and could make you sick

Do not use strong detergents such as wax or thinner; use a damp, soft cloth

- Appearance may be deteriorated due to change of product color or scratching of its surface

Use caution when unpacking and installing

- Sharp edges could cause injury

If water enters the unit, turn the unit off at the power outlet and switch off the circuit breaker. Isolate supply by taking power-plug out and contact a qualified service technician

- Water may enter the unit and degrade the insulation. It may cause an electric shock

IMPORTANT SAFETY INSTRUCTIONS

NOTE For some models, the power supply cord with this air conditioner contains a current detection device designed to reduce the risk of fire. Please refer to the section "Operation of Current Device" for details.
In the event that the power supply cord is damaged, it cannot be repaired-it must be replaced with a cord from the Product Manufacturer.

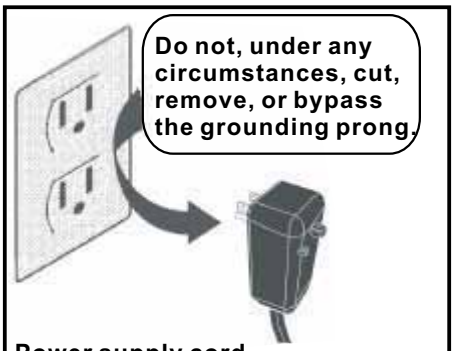

Power supply cord with 3-prong grounding plug and current detection device

⚠ WARNING For your safety

- Do not store or use gasoline or other flammable vapors and liquids in the vicinity of this or any other appliance.
- Avoid fire hazard or electric shock. Do not use an extension cord or an adaptor plug. Do not remove any prong from the power cord.

⚠ WARNING Electrical Information

- Be sure the electrical service is adequate for the model you have chosen. This information can be found on the serial plate, which is located on the side of the cabinet and behind the grille.
- Be sure the air conditioner is properly grounded. To minimize shock and fire hazards, proper grounding is important. The power cord is equipped with a three-prong grounding plug for protection against shock hazards.
- Your air conditioner must be used in a properly grounded wall receptacle. If the wall receptacle you intend to use is not adequately grounded or protected by a time delay fuse or circuit breaker, have a qualified electrician install the proper receptacle.
- Ensure the receptacle is accessible after the unit installation.
- Do not run air conditioner without side protective cover in place. This could result in mechanical damage within the air conditioner.
- **Do not use an extension cord or an adapter plug.**

Operation of Current Device

The power supply cord contains a current device that senses damage to the power cord. To test your power supply cord do the following:

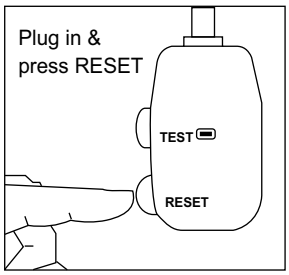

NOTE: Some plugs have buttons on the top.

1. Plug in the Air Conditioner.
2. The power supply cord will have TWO buttons on the plug head. Press the TEST button, you will notice a click as the RESET button pops out.
3. Press the RESET button, again you will notice a click as the button engages.
4. The power supply cord is now supplying electricity to the unit. (On some products this it also indicated by a light on the plug head.)

NOTES:

- Do not use this device to turn the unit on or off.
- Always make sure the RESET button is pushed in for correct operation.
- The power supply must be replaced if it fails reset when either the TEST button is pushed, or it cannot be reset. A new one can be obtained from the product manufacturer.
- If power supply cord is damaged, it cannot be repaired. It MUST be replaced by one obtained from the product manufacturer.

NORMAL SOUNDS

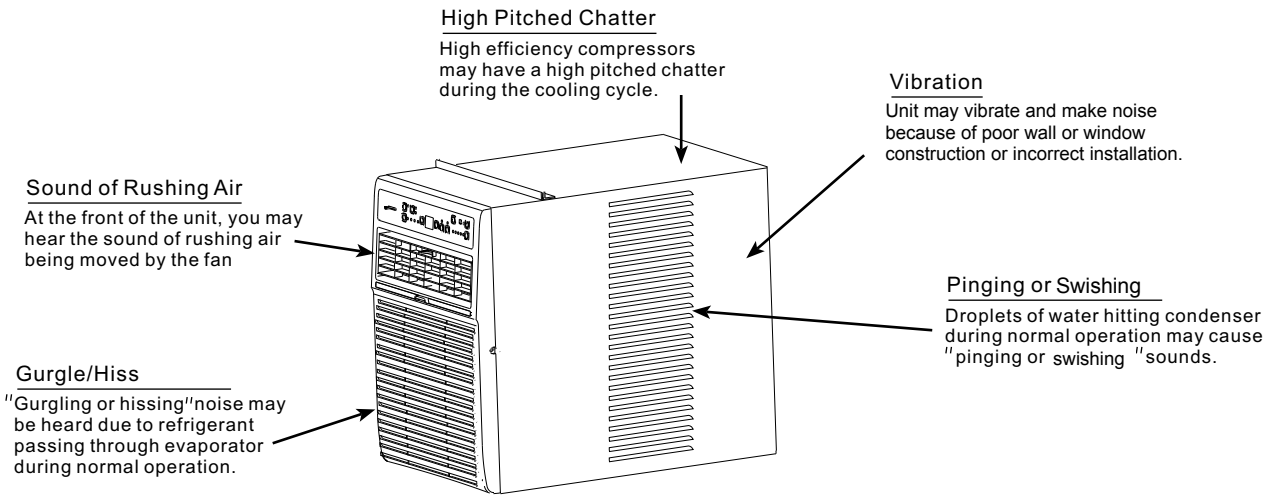

AIR CONDITIONER FEATURES

ELECTRONIC CONTROL OPERATING INSTRUCTIONS

Before you begin, thoroughly familiarize yourself with the control panel as shown below and all its functions, then follow the symbol for the functions you desire. **The unit can be controlled by the unit control alone or with the remote.**

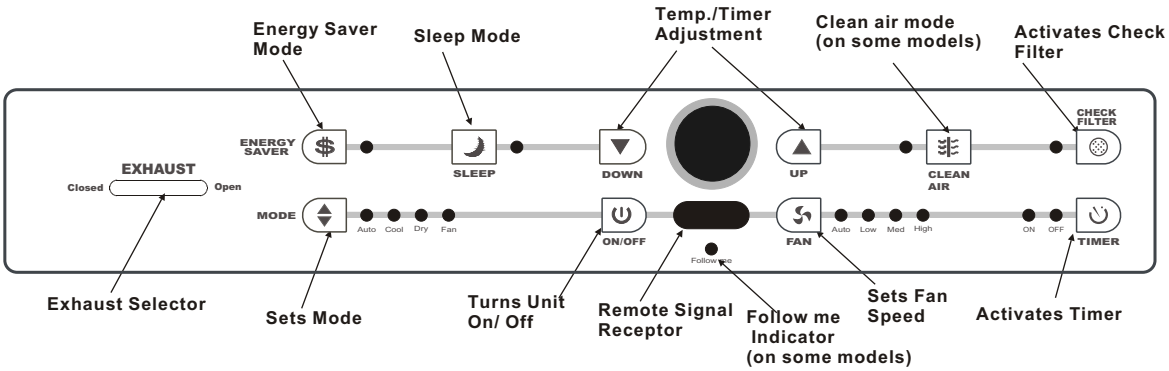

Unit control panel(1)

AIR CONDITIONER FEATURES

NOTE: The following instructions represent the Unit Controls, the same instructions can be used for the Remote Control.

TO TURN UNIT ON OR OFF:

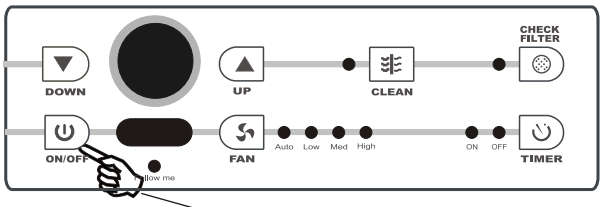

DO THIS:
Press the On/Off button.

TO CHANGE TEMPERATURE SETTING:

DO THIS:

Press to lower Press to raise

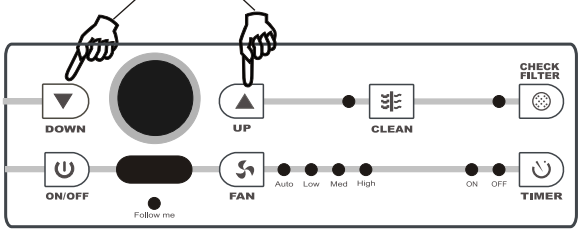

NOTE:

Press or hold either UP or DOWN button until the desired temperature is seen on the display. This temperature will be automatically maintained anywhere between 62°F(17°C) and 86°F(30°C). If you want the display to read the actual room temperature, see"To Operate on Fan Only"section.

Note: This appliance provides a feature that will allow you the option of setting temperatures in "Celsius" or "Fahrenheit". To change the temperature display on the main unit, press the UP and DOWN button "simultaneously" to alternate between the °C & °F scale. Celsius scale allows adjustments of 1°C increments. Fahrenheit scale allows adjustment of 1°F increments.

TO ADJUST FAN SPEEDS:

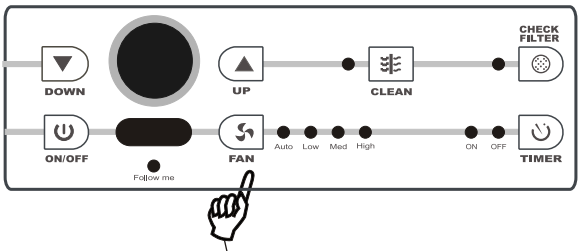

DO THIS:
Press to select appropriate fan speed

NOTE:

Used to select the Fan Speed in four steps- Auto, Low, Med or High. Each time the button is pressed, the fan speed mode is shifted. The chosen fan speed LED will light up.

AIR CONDITIONER FEATURES(CONTINUED)

TO SELECT THE OPERATING MODE:

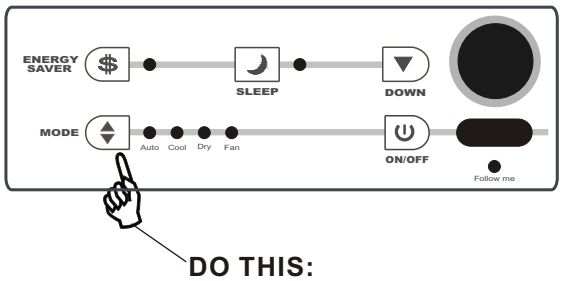

DO THIS:
Press the Mode button.

NOTE:

- To choose operating mode, press the Mode button. Each time you press the button, a mode is selected in a sequence that goes from Auto, Cool, Dry and Fan. The indicator light beside each mode will be illumniated and remain on once the mode is selected.

To operate on Auto feature:

- In this mode, the fan speed cannot be adjusted, it starts automatically at a speed according to the room temperature. If the room does not get too warm, it will stay at Low speed.

To operate on Fan Only:

- Use this function only when cooling is not desired, such as for room air circulation or to exhaust stale air(on some models). (Remember to open the vent during this function, but keep it closed during cooling for maximum cooling efficiency.) You can choose any fan speed you prefer.
- During this function, the display will show the actual room temperature, not the set temperature as in the cooling mode.

To operate on Dry mode:

- In the mode, the air conditioner will generally operate in the form of a dehumidifier to remove moisture from the air. Since the conditioned space is a closed or sealed area, some degree of cooling will continue.

TO USE THE ENERGY SAVER FEATURE:

DO THIS:
Press the button

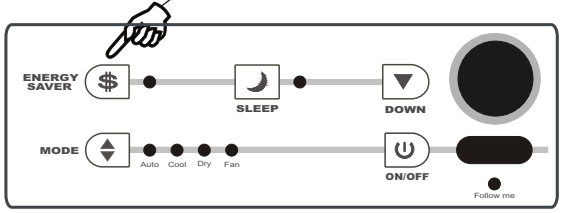

NOTE:

In this mode, the fan will continue to run for 3 minutes after the compressor shuts off. The fan then cycles on for 2 minutes at 10 minute intervals until the room temperature is above the set temperature, at which time the compressor turns back on and Cooling starts.

SLEEP FEATURE:

DO THIS:
Press Sleep button

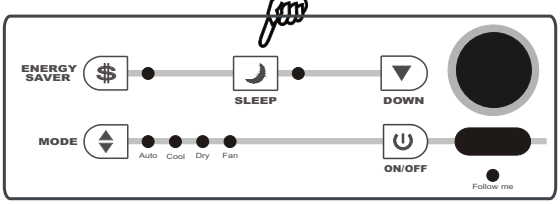

NOTE:

In this mode the selected temperature will increase by 2 degrees F 30 minutes after the mode is selected. The temperature will then increase by another 2 degrees F after an additional 30 minutes. This new temperature will be maintained for 7 hours before it returns to the originally selected temperature. This ends the Sleep mode and the unit will continue to operate as originally programmed. The Sleep mode program can be cancelled at any time during operation by again pressing the Sleep button.

AIR CONDITIONER FEATURES (CONTINUED)

TIMER: AUTO START/ STOP FEATURE:

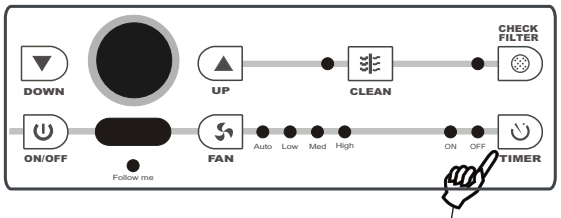

DO THIS:
Press Timer button

NOTE:

- Press the Timer button, the indicator light besides word On illuminates. It indicates the Auto Start program is initiated.
- Press or hold the Left arrow or Right arrow to change the time by 0.5 hour increments, up to 10 hours then at 1 hour increments up to 24 hours. The control will count down the time remaining until start.
- The selected time will register in 5 seconds and the system will automatically revert back to display the previous temperature setting.
- Turning the unit ON or OFF at any time will cancel the Auto Start/Stop function.

CHECK FILTER FEATURE:

DO THIS:
Press Check Filter button

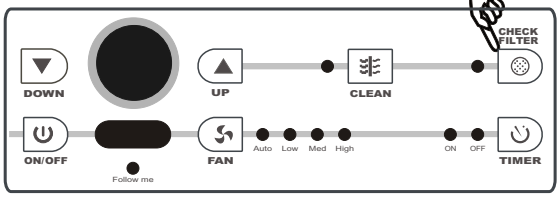

NOTE:
This feature is a reminder to clean the Air Filter for more efficient operation. The LED(light) will illuminate after 250 hours of operation. To reset after cleaning the filter, press the Check Filter button and the light will go off.

FOLLOW ME FEATURE:
(on some models)

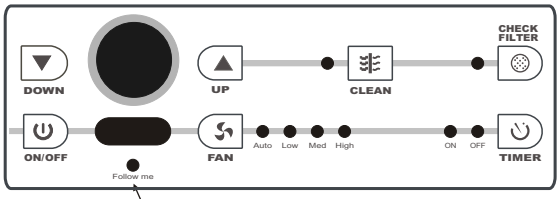

Light flashing

NOTE:
This feature can be activated from the remote control ONLY. The remote control serves as a remote thermostat allowing for the precise temperature control at its location.
To activate the Follow Me feature, point the remote control towards the unit and press the Follow Me button. The light on the unit control panel will pulse to indicate it received the signal. It will continue to send this signal until the feature is deactivated by pressing the Follow Me button again. If the unit does not receive the Follow Me signal during any 7 minutes interval, the unit will beep to indicate the Follow Me mode has ended. The display on the remote control indicates the temperature at the remote ONLY.
The actual temperature can be displayed at the unit by pressing the Fan Only mode. When in the Cool mode, the unit display indicates the set temperature.

AIR CONDITIONER FEATURES (CONTINUED)

DO THIS:
Press Check Filter button

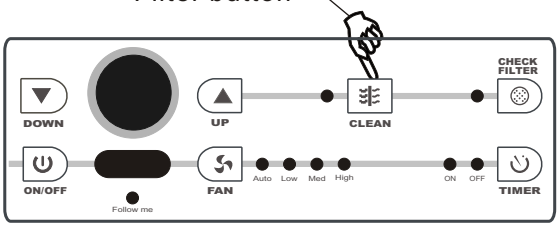

NOTE:
Press the Clean Air button, the ion generator is energized and will help to remove pollen and impurities from the air, and trap them in the filter.

Additional things you should know

Now that you have mastered the operating procedure, here are more features that you should become familiar with.

- The compressor has an automatic 3 minute time delayed start if the unit is turned off and on again quickly. This prevents overheating of the compressor and possible circuit breaker tripping. The fan will continue to run during this time.
- The control will maintain any set temperature within 2°F (1°C), between 60°F (16°C) and 90°F (32°C) degress.
- The control is capable of displaying temperature in degrees Fahrenheit or degrees Celsius. To convert from one to the other, press and hold the UP and DOWN Temp/Timer buttons at the same time, for 3 seconds.

Exhaust Control

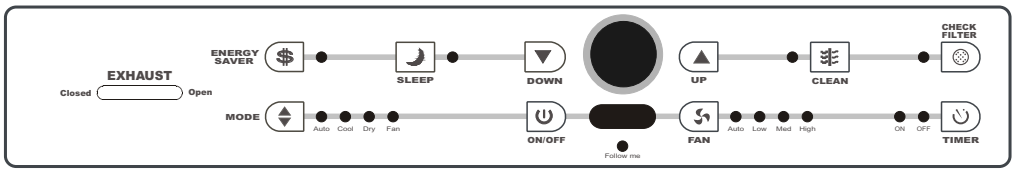

This Exhaust Control allows the air conditioner to either circulate inside air (Closed) or exhaust air to the outside (Open).
The Closed position is used when maximum cooling is desired. It may also be used for air re-circulation without cooling when the air conditioner is set in any FAN position.
The Open position removes stale air from the room and exhausts it to the outside.

4-Way Louvers

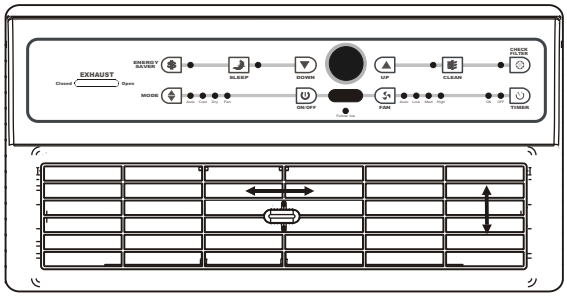

The 4-Way air directional louvers allow you to direct air flow up or down, left or right throughout the room as needed. To adjust the air directional louvers side-to-side, use the lever until the desired direction is obtained.

INSTALLATION INSTRUCTIONS

NOTE: These instructions describe installation in a typical wood framed window with a wood SLIDE -BY sash, or installation in a metal CASEMENT window. Modification may be necessary when installing in windows made differently than those shown in these instructions.

Meeting Electrical Requirements

⚠ WARNING

Electrical Shock and Personal Injury Hazard

- Electrical ground is required on this appliance.
- DO NOT ground to a gas line.
- If cold water pipe is interrupted by plastic, non-metallic gaskets, or other insulating materials, DO NOT use for grounding.
- Check with a qualified electrician if you are in doubt as to whether the appliance is properly grounded.
- DO NOT modify power supply cord plug. If it does not fit outlet, have a proper outlet installed by a qualified electrician.
- DO NOT have a fuse in the neutral or grounding circuit. A fuse in the neutral, or grounding circuit could result in an electrical shock.
- DO NOT use an extension cord with this appliance.

Failure to follow these instructions could result in electrical shock, serious injury, or death.

Observe all national and local governing codes and ordinances.

Do not, under any circumstances, remove the power supply cord grounding prong.

NOTE: If codes permit, and a separate grounding wire is used; it is recommended that a qualified electrican determine that the grounding path is adequate and not interrupted by plastic, non-metallic gaskets, or other insulating materials.

Receptacle wiring
Receptacle wiring should be a minimum of 14 gauge. Use copper wire only. It is your responsibility to provide proper and adequate receptacle wiring, installed by a qualified electrician.

Electrical requirements
A time delay fuse or time delay circuit breaker is also required. A separate circuit, serving only this appliance, MUST be provided.

Preparing for Installation

Installation Tips

For wood-frame casement windows: It may be necessary to construct a frame, using at least 1-inch thick wood, with a 15-1/2-inch wide opening.

For brick or cement building construction: It may be necessary to put a wood stool strip under AC, for mounting purposes.

Tools Required:
Flat-head screwdriver
Phillips-head screwdriver
Carpenter`s level
Tape measure
Fine tooth saw
Electric or hand drill

1. Make sure you have all the necessary parts.

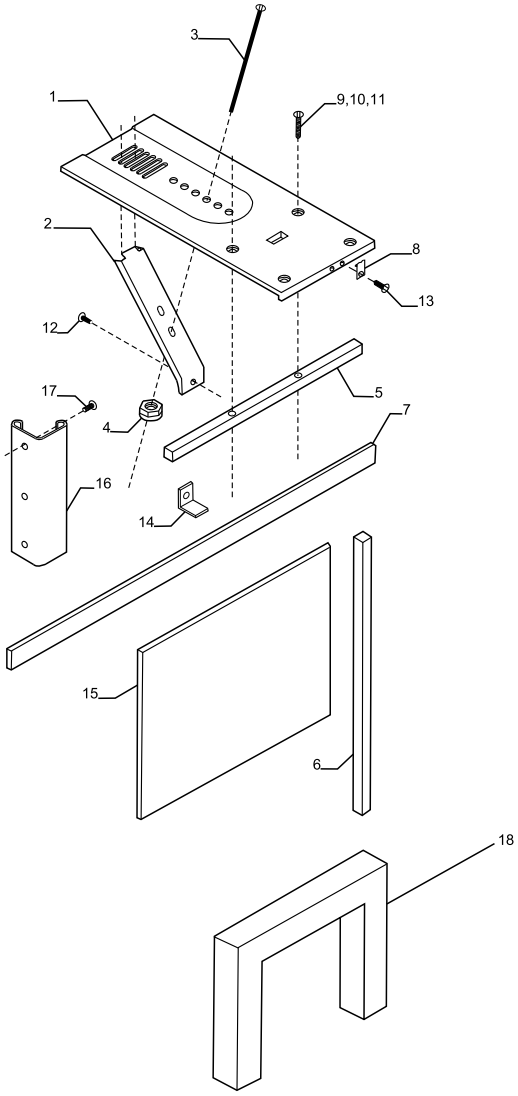

Installation kit contents:

1. Platform(1)
2. Support brace(1)
3. Adjustment bolt(1)
4. Hex flange nut 1/4" (1)
5. Track seal(1)
6. Side channel seal(1)
7. Foam seal strip/Sash seal
8. Safety bracket(1)
9. Screw-2-1/2″ (2), or
10. Screw-1-3/4″ (2), or
11. Screw-1″(2)
12. Screw-3/4″(6)
13. Screw-3/4″ self-threading(7)
14. Window locking bracket(1)
15. Plastic window panel(1)
16. Side channel(2)
17. Screw-3/8″(6)
18. Panel frame/seal assembly(1)

NOTE: Use scale below to measure length of your screws. The scale will come in handy when separating screws for installation.

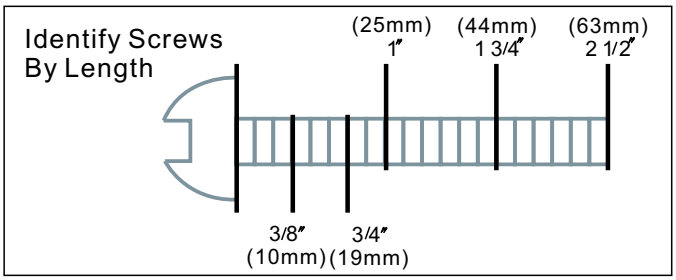

2. Choose a proper sized window, as shown right.

- 15-1/2 inches minimum width
- 16-1/4 inches maximum width(for casement windows)
- 21-1/4 inches minimum height (with window panel retainer)
- 20-5/16 inches minimum height (window panel retainer removed)
- 39-7/16 inches maximum height

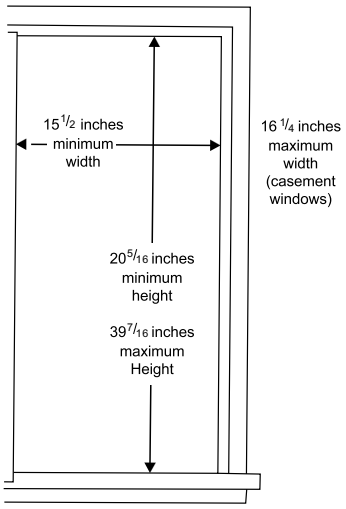

NOTE: Height measurement must be of a clear opening above mounting platform. In some cases, due to a variety of stop and track arrangements, the above dimensions may vary slightly. If necessary, installation can be made by alternating window jambs.(See Alternate Window Jamb Applications.) (continued)

3. Choose the proper window location.

Choose a window that allows the cooled air to flow freely and directly into room(s) you wish to cool. Remember, it is difficult to move air around corners. Also, choose a window that is within 6 feet of an electrical outlet. (See Meeting Electrical Requirements/Receptacle wiring needs.) **Do not use an extension cord.**

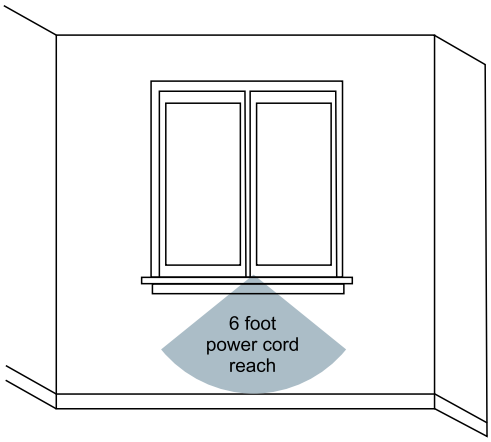

Installing Unit in a Sliding Window

1. Attach support brace to platform as shown. Use adjustment bolt and hex flange nut to complete assembly. Choose slot and adjustment bolt hole locations that will create a 45 degree angle between platform and support brace. Try assembly in the window to determine if platform will rest properly, and allow proper slope (3/16-inch lower on outside).

NOTE: If you are planning to use a siding-protection board (see Step 5) on the outside of your house, hold board in place when testing assembly in window.

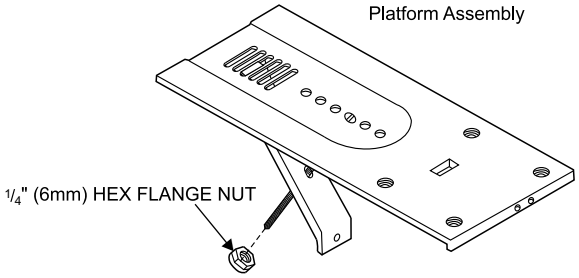

2. Measure, and lightly mark a line 8-11/16 inches from window jamb.
NOTE: If any sash stop protrudes more than 1 inch from the side window jambs, the 8-11/16-inch measurement must be increased accordingly. Screen and storm window frames may also require adjustments to the measurement.

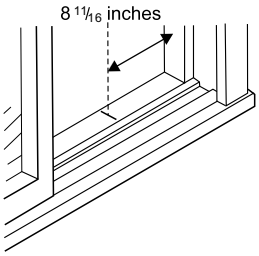

3. Center platform assembly on the line with inside platform tab pressed against inside edge of window track. Using the holes in the platform as a guide, mark and drill two 9/64-inch diameter holes. Drill holes in either track or sill.

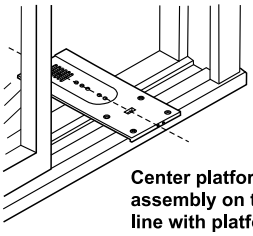

Center platform assembly on the line with platform tab pressed against window track

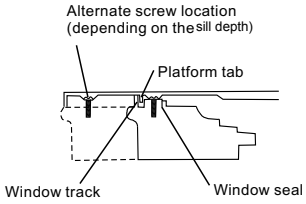

CAUTION

Property Damage Hazard-Failure to adhere to the following precaution could result in damage to window or air conditioner.
Be sure wood stool or window track is securely attached to the building construction. Use longer screws in sub-framing if necessary.

(continued)

4. Peel off protective backing from track seal. Apply seal to room side of window track. Center of seal strip should coincide with the line marked in Step 2. The two screw holes drilled in Step 3 should be directly above seal strip in the inner track.

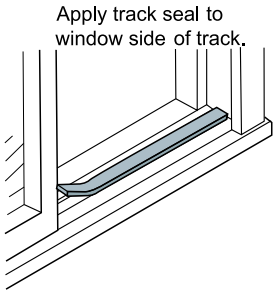

5. Securely attach a siding-protection board to side of house.

NOTE: Siding-protection board should be long enough to span 2 wall studs.

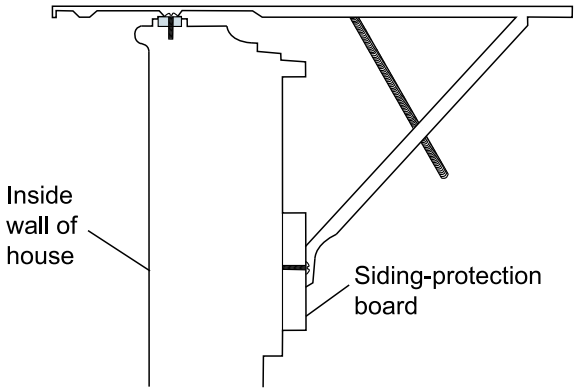

6. Place platform assembly, with platform tab against inside of window track, and attach it to window jamb. Use appropriate length screws (Items 9-11 in Preparing For Installation).

7. Adjust platform assembly so that outside edge is 3/16-inch lower than inside edge, as shown right. This ensures proper water drainage from the air conditioner.

8. Level platform assembly from side-to-side. Also, make sure window track is level. Use leveling shims as necessary to ensure unit is level from side-to-side.

9. Measure height of window opening from top of platform assembly as shown right. Subtract 20-5/8 inches. Mark this measurement on plastic window panel, along the longer side. (continued)

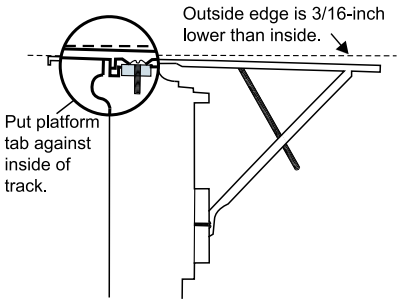

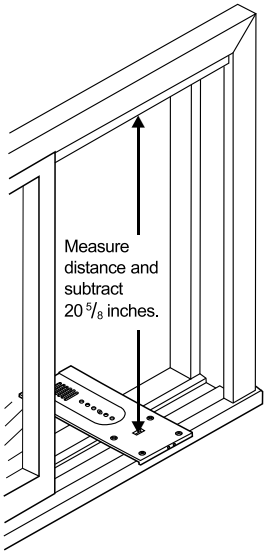

10. Clamp plastic window panel between a board and a work table, and cut along cutting line with a fine tooth saw. Remove any burrs with a file.

11. Fasten side channels to the sides of the AC using 3 screws (Item 17) per channel. Start with first screw at top of channel. Make sure hook ends of channels face toward back of unit.

12. Slide plastic window panel into panel frame, with the smooth side to the room. Slide panel frame assembly into side channels of the AC cabinet. Make sure plastic window panel is firmly enclosed on all sides by the retainer grooves.

13. Cut side channel seal into 2 equal lengths. Remove protective backing and apply it to the rear side of cabinet side channels, starting just below panel frame assembly. Pinch off excess length so seal is even with the bottom of the cabinet side channel.

14. To remove front

1. Remove the two front retaining screws from the front frame.
2. Gently pull the front out and lift up to release it from the case.
3. Then release the coupler plugs.

NOTE: DO NOT push or pull air direction louvers.

15. Place AC in window opening. As shown right, it should sit on platform assembly so that window panel frame, and cabinet side channels are against top and side window jambs. (continued)

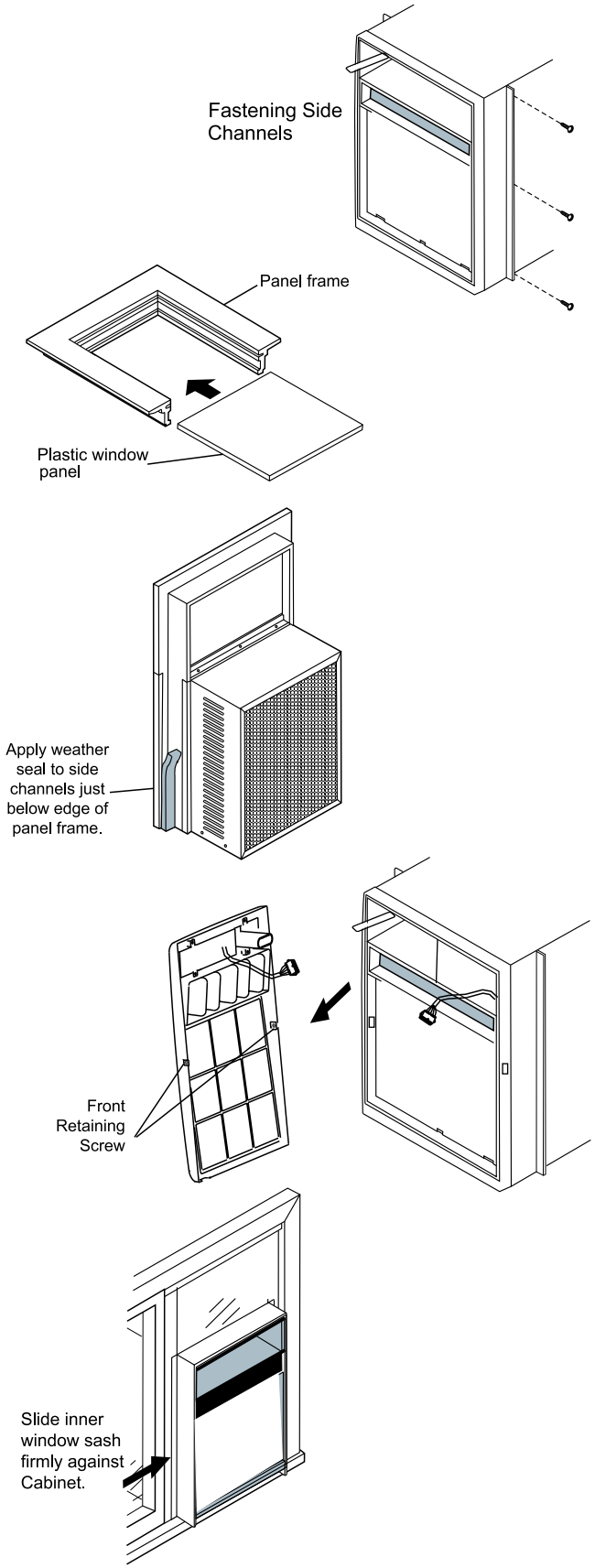

16. Slide inner window sash firmly against side of the cabinet. Make sure not to peel the seal strips from the window track and cabinet side channels. If the panel frame does not fit snugly to the inner window sash, secure the panel frame to the sash with 3/4-inch screws, or 3/4-inch self-threading screws. Use the partially plugged holes in the panel frame. Drill 1/8-inch pilot holes for the screws.

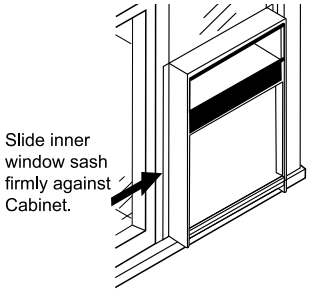

17. Hook the safety bracket over the base of the unit and fasten it to the front of the platform assembly. Use a 3/4-inch self-threading screw.

NOTE: The bracket prevents movement of the air conditioner (either in or out) after completing the installation.

Install safety bracket

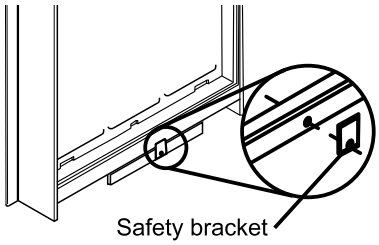

18. Insert the foam seal strip/sash seal between the vertical sash and the window glass, as shown right.

19. Use the window locking bracket to lock the inner window sash to the base of the outer window sash. Use one 3/4-inch screw, or 3/4-inch self-threading screw. (Drill 1/8-inch pilot hole).

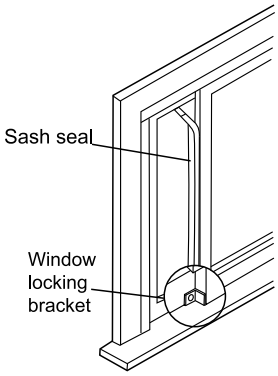

20. To replace the front

First reconnect the coupler plugs, make the Exhaust control positioned through the front in the proper location. Then replace the retaining screws that holds the panel in place. **Do not** push or pull the front panel louvers.

Alternate Window Jamb Applications

To install in windows having no flanges or wood stops on the top and side jambs, the channels and panel frame must fit against a mating flange (or 1/16-inch max. thick angle) attached to the window jambs. Figure A shows this angle installed. Figures B & C show alternate treatments. On the sash side of the opening, the leading corner of the inner sash becomes the flange. You can purchase the angle strip locally.

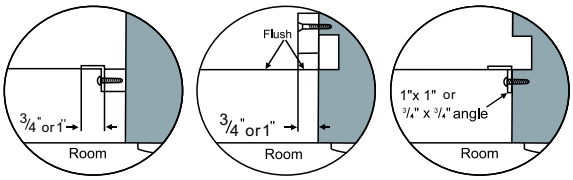

A
Add angle to wood stop

B
Add wood as shown

C
Add 16- or 18-gauge angle

Installing the Unit in a Casement Window

NOTE: Open the window the maximum amount to allow for clearance of the cabinet. The crank handle should be removed to allow the platform to be fastened to the jamb. If the window cannot open far enough (more than 15-1/2 inches) for the cabinet to clear the window, remove the window entirely by drilling out the rivets. Bolts can serve as the pivots in the future.

To avoid crank handle and window clearance problems, the unit can be installed in a stationary sash section. However, the horizontal mullion and the glass panels must be removed before installation.

1. Attach support brace to platform as shown. Use the adjustment bolt and hex flange nut to complete the assembly. Choose the slot and adjustment bolt hole locations that will create a 45 degree angle between the platform and the support brace. Try the assembly in the window to determine if the platform will rest properly, and allow the proper slope (3/16-inch lower on outside).

NOTE: If you are planning to use a siding-protection board (see Step 6) on the outside of your house, hold the board in place when testing the assembly in the window.

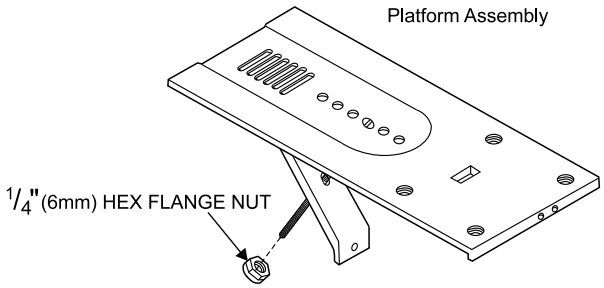

2. Drill a 9/64-inch diameter pilot hole in the window jamb an equal distance from each side of the jamb, and 3/16-inch up from the window sill. If the hole coincides with the window lever slot in the jamb bottom, an additional hole will have to be drilled through the platform edge and the window jamb to miss this slot.

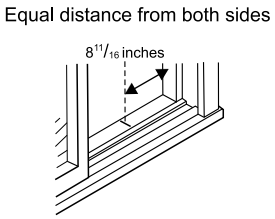

3. Peel off the protective backing from the track seal, and stick the seal to the window sill on the outside of the bottom jamb.

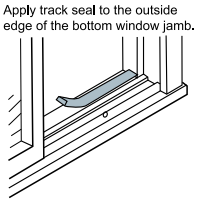

4. Screw the platform assembly to the window jamb through the pilot hole you drilled in Step 2. Use a 3/4-inch self-threading screw. (continued)

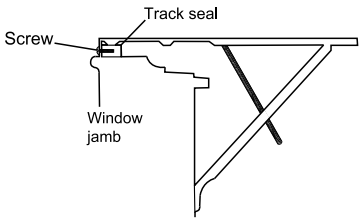

5. Adjust the platform assembly so that the rear of the air conditioner will be 3/16-inch lower than the front. This ensures proper water drainage from the air conditioner.

NOTE: A projection below the base of the air conditioner will require the rear of the platform to be 7/16-inch lower than the front to create the 3/16-inch slant from front to rear.

6. Securely attach a siding-protection board to the side of the house where the platform assembly hit the house. The siding-protection board should be long enough to span 2 wall studs.

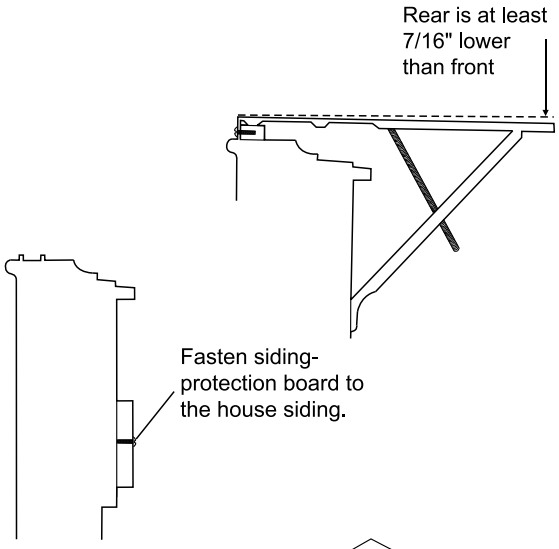

7. Measure the height of the window opening from the top of the platform assembly. Subtract 20-5/8 inches. Mark this measurement on the plastic window panel, along the longer side.

8. Clamp the plastic window panel between a board and a work table, and cut along the cutting line with a fine tooth saw. Remove any burrs with a file.

9. Fasten the side channels to the sides of the unit using three screws (Item 17) per channel. Make sure hook ends of channels face toward the back of unit.

10. Slide the plastic window panel into the panel frame with the smooth side to the outside. Slide the panel frame assembly into the side channels of the air conditioner cabinet. Make sure the plastic window panel is firmly enclosed on all sides by the retainer grooves. (continued)

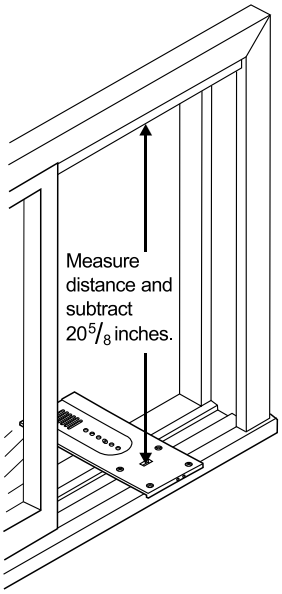

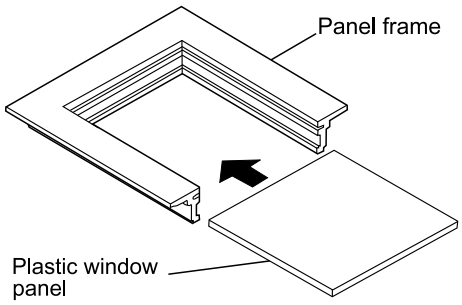

11. Cut side channel seal into 2 equal lengths. Remove the protective backing and apply it to the rear side of the cabinet side channels, starting just below the panel frame assembly. Pinch off excess length so the seal is even with the bottom of the cabinet side channel.

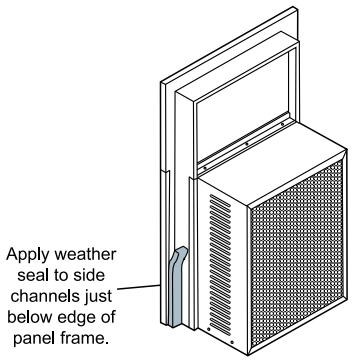

12. To remove front

1. Remove the two front retaining screws from the front frame.
2. Gently pull the front out and lift up to release it from the case.
3. Then release the coupler plugs.

NOTE: DO NOT push or pull air direction louvers.

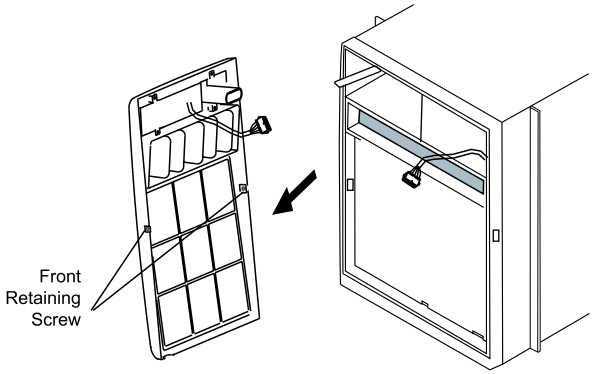

13. Place the air conditioner in the window opening as shown to the right. It should sit on the platform assembly so that the window panel frame, and the cabinet side channels are against the top and side window jambs. Side channels should overlap side window jambs equally.

14. Drill two 9/64-inch diameter pilot holes in the top window jamb in line with the partially plugged holes in the panel frame. Secure the panel fame to the window jamb with two 3/4-inch self- threading screws. If additional holding is necessary, two screws may be used on the sides of the panel frame as well.

15. Drill two screw-clearance holes in the cabinet side channels (near bottom) and two 9/64-inch diameter pilot holes in the side window jambs. Secure the cabinet side channels to the window jambs with two 3/4-inch self-threading screws. When doing this, be careful not to twist the side channel seals with the screws.

NOTE: Inserting screws will prevent the air conditioner from being pushed into the room.

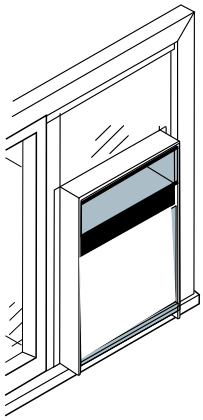

16. To replace the front

First reconnect the coupler plugs, make the Exhaust control positioned through the front in the proper location. Then replace the retaining screws that holds the panel in place. **Do not** push or pull the front panel louvers.

CARE AND CLEANING

WARNING!

Clean your air conditioner occasionally to keep it looking new. **Be sure to unplug the unit before cleaning to prevent** shock **or fire hazards.**

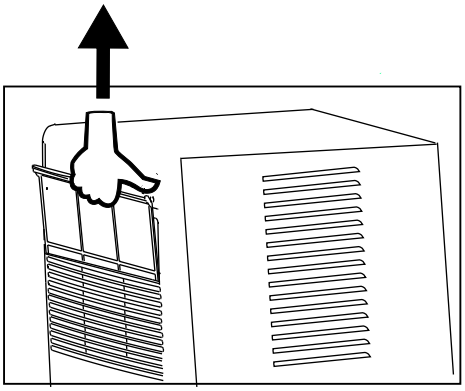

Air Filter Cleaning

The air filter should be checked at least once a month to see if cleaning is necessary. Trapped particles in the filter can build up and cause an accumulation of frost on the cooling coils.

- Grasp the filter by the center and pull up and out.
- Wash the filter using liquid dishwashing detergent and warm water. Rinse filter thoroughly.
- Gently shake excess water from the filter. Be sure the filter is thoroughly dry before replacing.
- Or, instead of washing you may vacuum the filter clean.

Note: Never use hot water over 104°F (40°C) to clean the air filter. Never attempt to operate the unit without the air filter.

Cabinet Cleaning

- Be sure to unplug the air conditioner to prevent shock or fire hazard. The cabinet and front may be dusted with an oil-free cloth or washed with a cloth dampened in a solution of warm water and mild liquid dishwashing detergent. Rinse thoroughly and wipe dry.
- Never use harsh cleaners, wax or polish on the cabinet front.
- Be sure to wring excess water from the cloth before wiping around the controls. Excess water in or around the controls may cause damage to the air conditioner. Plug in air conditioner.

Winter Storage

- If you plan to store the air conditioner during the winter, remove it carefully from the window according to the installation instructions. Cover it with plastic or return it to the original carton.

NOTE: To prevent rust or electrical connections from being damaged, store air conditioner in an upright position and in a dry place.

TROUBLESHOOTING TIPS

Before calling for service, review this list. It may save you time and expense. This list includes common occurrences that are not the result of defective workman-ship or materials in this appliance.

Problem	Solution
Air conditioner does not start	*Wall plug disconnected. Push plug firmly into wall outlet.*
	House fuse blown or circuit breaker tripped. Replace fuse with time delay type or reset circuit breaker.
	Plug Current Device Tripped. Press the RESET button.
	Control is OFF. Turn Control ON and set to desired setting.
Air from unit does not feel cold enough	*Room temperature below 64°F (18°C). Cooling may not occur until room temperature rises above 64°F (18°C).*
	Temperature sensing element touching cold coil, located behind air filter. Straighten tube away from coil.
	Reset to a Lower temperature.
	Compressor shut-off by changing modes. Wait approximately 3 minutes and listen for compressor to restart when set in the COOL mode.
Air conditioner cooling, but room is too warm- ice forming on cooling coil behind decorative front.	*Outdoor temperature below 64°F (18°C). To defrost the coil, set FAN ONLY mode.*
	Air filter may be dirty. Clean filter. Refer to Care and Cleaning section. To defrost, set to FAN ONLY mode.
	Thermostat set too cold for night-time cooling. To defrost the coil, set to FAN ONLY mode. Then, set temperature to a Higher setting.
Air conditioner cooling, but room is too warm- NO ice forming on cooling coil behind decorative front.	*Dirty air filter- air restricted. Clean air filter. Refer to Care and Cleaning section.*
	Temperature is set too High, set temperature to a Lower setting.
	Air directional louvers positioned improperly. Position louvers for better air distribution.
	Front of units is blocked by drapes, blinds, furniture, etc. - restricts air distribution. Clear blockage in front of unit.
	Doors, windows, registers, etc. Open- cold air escapes. Close doors, windows, registers.
	Unit recently turned on in hot room. Allow additional time to remove "Stored heat" from walls, ceiling, floor and furniture.
Air conditioner turns on and off rapidly	*Dirty air filter- air restricted. Clean air filter.*
	Outside temperature extremely hot. Set FAN speed to a Higher setting to bring air past cooling coils more frequently.
Noise when unit is cooling	*Air movement sound. This is normal . If too loud, set to a slower FAN setting.*
	Window vibration - poor installation. Refer to installation instructions or check with installer.
Water dripping INSIDE when unit is cooling.	*Improper installation. Tilt air conditioner slightly to the the rear/outside to allow water drainage. Refer to installation instructions - check with installer.*

Problem	***Solution***
Water dripping OUTSIDE when unit is cooling.	*Unit removing large quantity of moisture from humid room. This is normal during excessively humid days.*
Remote Sensing Deactivating Prematurely (some models)	*Remote control not located within range. Place remote control within 20 feet & 180°, radius of the front of the unit.*
	Remote control signal obstructed. Remove obstruction.
Room too cold	*Set temperature too low. Increase set temperature.*

Design, material, performance data and components
subject to change without notice.

HEAT CONTROLLER, INC.

1900 Wellworth Ave., Jackson, MI 49203 • Ph. 517-787-2100 • Fax 517-787-9341

THE QUALITY LEADER IN CONDITIONING AIR

www.heatcontroller.com

11/2011