59TP6B
Performance Two−Stage, Variable Speed 4−Way Multipoise 35−in. (889 mm) Tall Condensing Gas Furnace

Carrier
turn to the experts

Product Data

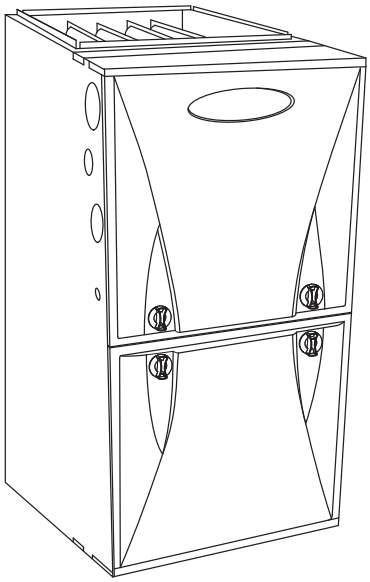

A11263

The 59TP6B Multipoise Variable-Speed Condensing Gas Furnace features the two-stage Performance™ System. The Comfort Heat® technology two-stage gas valve is at the heart of the comfort provided by this furnace, along with the variable-speed ECM blower motor, and two-speed inducer motor. With an Annual Fuel Utilization Efficiency (AFUE) up to 96.5%, the Performance™ Series two-stage gas furnace provides exceptional savings when compared to standard gas furnaces. This Performance Gas Furnace also features 4-way multipoise installation flexibility, and is available in eight model sizes. The 59TP6B can be vented for direct vent/two-pipe, ventilated combustion air, or single-pipe applications. Low NOx units are designed for California installations and meet 40 ng/J NOx emissions. Can be installed in air quality management districts with a 40 ng/J NOx emissions requirement. All sizes are design certified in Canada. This furnace is not designed for use in recreation vehicles, manufactured (mobile) homes or outdoors.

PERFORMANCE

- Variable-speed, constant-torque ECM blower motor, two-speed inducer motor, and two-stage gas valve.
- Fully-insulated casing including blower section.
- Aluminized-steel primary heat exchanger.
- Stainless-steel condensing secondary heat exchanger.
- Silicon Nitride Power Heat™ Hot Surface Igniter.
- Adjustable blower speed for heating, cooling, continuous fan, and dehumidification.
- ComfortFan™ technology allows control of continuous fan speed from a compatible thermostat.

INSTALLATION FLEXIBILITY

- 4-way multipoise design for upflow, downflow or horizontal installations, with unique vent elbow and optional through-the-cabinet downflow venting capability.
- Factory-configured ready for upflow applications.
- Installation flexibility: sidewall or vertical vent.
- Ideal height 35” (889 mm) cabinet: short enough for taller coils, but still allows enough room for service.
- Direct-vent/sealed combustion, single-pipe venting or ventilated combustion air.

APPLICATIONS

- Propane convertible with gas conversion accessory kit.
- Convenient Air Purifier and Humidifier connections.
- 5 ton sizes (sizes 080--20, 100--20) allow 15 Amp breaker with accessory (order separately).

CERTIFICATIONS

- All sizes meet ENERGY STAR® Version 4.1 criteria for gas furnaces: 95%+ AFUE.
- Cabinet air leakage less than 2.0% at 1.0 in. W.C. and cabinet air leakage less than 1.4% at 0.5 in. W.C. when tested in accordance with ASHRAE standard 193.
- All sizes meet 40 ng/J NOx emissions. Can be installed in air quality management districts with a 40 ng/J NOx emissions requirement

Performance™ SERIES

ENERGY STAR

Certified System ISO 9001 Quality

DESIGN CERTIFIED

CERTIFIED

AHRI CERTIFIED www.ahridirectory.org
Use of the AHRI Certified TM Mark indicates a manufacturer's participation in the program. For verification of certification for individual products, go to www.ahridirectory.org.

USE OF INSTALLATION FACTORY AUTHORIZED PARTS ENGINEERED QUALITY

FURNACE SIZE	CASING DIMENSIONS (IN.)			RATED HEATING OUT-PUT† (BTUH)		AFUE		ENER-GY STAR®	HEATING AIRFLOW			COOLING CFM @ 0.5 ESP (in. W.C.)	MOTOR HP
	H	D	W	High	Low	UP-FLOW/ HORI-ZONTAL	DOWN-FLOW		CFM‡ (High Heating	CFM (Low Heat-ing)	High Heat-ing ESP (in. W.C.)		
040V14-10	35	29.50	14.20	39,000	25,000	95.0%	95.0%	YES	800	560	0.10	1030	1/2
040V17-12	35	29.50	17.50	39,000	25,000	96.0%	95.0%	YES	850	625	0.10	1105	1/2
060V14-12	35	29.50	14.20	58,000	38,000	95.0%	95.0%	YES	1110	770	0.12	1115	1/2
060V17-14	35	29.50	17.50	58,000	38,000	96.3%	95.0%	YES	1135	860	0.12	1475	3/4
080V17-16	35	29.50	17.50	78,000	50,000	96.2%	95.0%	YES	1450	1130	0.15	1655	3/4
080V21-20	35	29.50	21.00	78,000	51,000	96.5%	95.0%	YES	1555	1200	0.15	2005	1
100V21-20	35	29.50	21.00	97,000	63,000	96.1%	95.0%	YES	1865	1435	0.20	2005	1
120V24-22	35	29.50	24.00	117,000	76,000	96.5%	95.0%	YES	2120	1625	0.20	2190	1

†Capacity in accordance with DOE test procedures. Ratings are position dependent. See rating plate.
‡Minimum heat CFM when low–heat rise adjustment switch (SW 1–3) and comfort/efficiency adjustment switch (SW1–4) on control center are OFF.
ESP – External Static Pressure

FEATURES AND BENEFITS

Comfort Heat Technology® — This feature with Adaptive Control is a proprietary function that promotes homeowner comfort through two stages of heating. This Carrier's furnace offers a patented algorithm that continually monitors and adjusts furnace operation by looking at both current and past conditions to determine the most effective stage of heating and the amount of time to run each stage, every cycle.

SmartEvap™ Technology — When paired with a compatible thermostat, this dehumidification feature overrides the cooling blower off-delay when there is a call for dehumidification. By deactivating the blower off-delay, SmartEvap technology prevents condensate that remains on the coil after a dehumidification cycle from re-humidifying throughout the home. This results in reduced humidity and a more comfortable indoor environment for the homeowner.

Unlike competitive systems, SmartEvap technology only overrides the cooling blower off delay when humidity control is needed. Once humidity is back in control, SmartEvap re-enables the energy-saving cooling blower off-delay.

ComfortFan™ Technology — Sometimes the constant fan setting on a standard furnace system can actually reduce homeowner comfort by providing too much or too little air! ComfortFan technology improves comfort all year long by allowing the homeowner to select the continuous fan speed of their choice using a compatible thermostat.

Fan Technology — Sometimes the constant fan setting on a standard furnace system can actually reduce homeowner comfort by providing too much or too little air! Fan On Plus technology improves comfort all year long by allowing the homeowner to select the continuous fan speed of their choice using a compatible thermostat.

HYBRID HEAT® Dual Fuel system — This system can provide more control over your monthly energy bills by automatically selecting the most economical method of heating. With HYBRID HEAT® Dual Fuel, our system automatically switches between the gas furnace and the electric heat pump as outside temperatures change to maintain greater efficiency and comfort than with any traditional single-source heating system. The heat pump also delivers high-efficiency cooling in the summer.

Power Heat™ Igniter — Carrier's unique SiN igniter is not only physically robust but it is also electrically robust. It is capable of running at line voltage and does not require complex voltage regulators as do other brands. This unique feature further enhances the gas furnace reliability and continues Carrier's tradition of technology leadership and innovation in providing a reliable and durable product.

ECM Motors — Our variable-speed, constant torque ECM (Electronically Commutated Motor) optimizes comfort levels in the home year round; features such as passive/active dehumidification, ramping profiles, and quiet operation. It can provide cooling match enhancements to increase the effective SEER of select Carrier air conditioner or heat pump systems. This motor does not report back RPM and static pressure to the furnace control.

Reliable Heat Exchanger Design — The aluminized steel, clam shell primary heat exchanger was re-engineered to achieve greater efficiency out of a smaller size. The first two passes of the heat exchanger are based on the current 80% product, a design with more than ten years of field-proven performance and success. These innovations, paired with the continuation of a crimped, no-weld seam create an efficient, robust design for this essential component.

The condensing heat exchanger, a stainless steel fin and tube design, is positioned in the furnace to extract additional heat. Stainless steel coupling box componentry between heat exchangers has exceptional corrosion resistance in both natural gas and propane applications.

Optional Media Filter Cabinet — Enhanced indoor air quality in the home is made easier with our media filter cabinet (available as an accessory). When installed as a part of the system, this cabinet allows for easy and convenient addition of a Carrier high efficiency air filter.

4-Way Multipoise Design — One model for all applications – there is no need to stock special downflow or horizontal models when one unit will do it all.

Direct or Single-pipe Venting, or Optional Ventilated Combustion Air — This furnace can be installed as a 2-pipe (Direct Vent) furnace, in an optional ventilated combustion air application, or in single-pipe, non-direct vent applications. This provides added flexibility to meet diverse installation needs.

Sealed Combustion System — This furnace brings in combustion air from outside the furnace, which results in especially quiet operation. By sealing the entire combustion vestibule, the entire furnace can be made quieter, not just the burners.

Insulated Casing — Foil-faced insulation in heat exchanger section of the casing minimizes heat loss. The acoustical insulation in the blower compartment reduces air and motor noise for quiet operation.

Monoport Burners — The burners are specially designed and finely tuned for smooth, quiet combustion and economical operation.

Bottom Closure — Factory-installed for side return; easily removable for bottom return. The multi-use bottom closure can also serve for roll-out protection in horizontal applications, and act as the bottom closure for the optional return air base accessory.

Certifications — This furnace is CSA (AGA and CGA) design certified for use with natural and propane gases. The furnace is factory-shipped for use with natural gas. A CSA listed gas conversion kit is required to convert furnace for use with propane gas. The efficiency is AHRI efficiency rating certified.

MODEL NUMBER NOMENCLATURE

1, 2 Gas Furnace 59	3 Heating Stages M	4 Tier N	5 Min. AFUE/NOx 7	6 Major Series B	7, 8, 9 Heating Input 060	10 Motor Type E	11, 12 Width 17	13 Voltage (1-phase) 1	14 Minor Series 1	15, 16 Airflow 16
58 = 80% Non-Condensing 59 = 90%+ Condensing	M = Modulating S = Single Stage T = Two Stage	B = Base C = Comfort E = Export N = Infinity P = Performance U = Ultra Low Nox	0 = Std. NOx 80% 1 = 80% Low Nox --- 2 = 92% 5 = 95% 6 = 96% 7 = 97% 8 = 98%	A B C ---	026 = 26,000 BTU 040 = 40,000 BTU 060 = 60,000 BTU --- 155 = 155,000 BTU	C = Comm. Variable-Speed Constant Airflow (VCA) ECM E= Fixed-Speeds Constant Torque (FCT) ECM V = Variable-Speed Constant Torque (VCT) ECM	14 - 14.2" 17 - 17.5" 21 - 21.0" 24 - 24.5"	1 = 110V/60Hz 2 = 230V/50Hz	1 2 3 ---	08 = 800 CFM 10 = 1000 CFM 12 =1200 CFM 14 = 1400 CFM 16 = 1600 CFM 20 = 2000 CFM 22 = 2200 CFM

A190041

For California Residents:

For installation in SCAQMD only: This furnace does not meet the SCAQMD Rule 1111 14 ng/J NOx emission limit, and thus is subject to a mitigation fee of up to $450. This furnace is not eligible for the Clean Air Furnace Rebate Program: www.CleanAirFurnaceRebate.com

FURNACE COMPONENTS

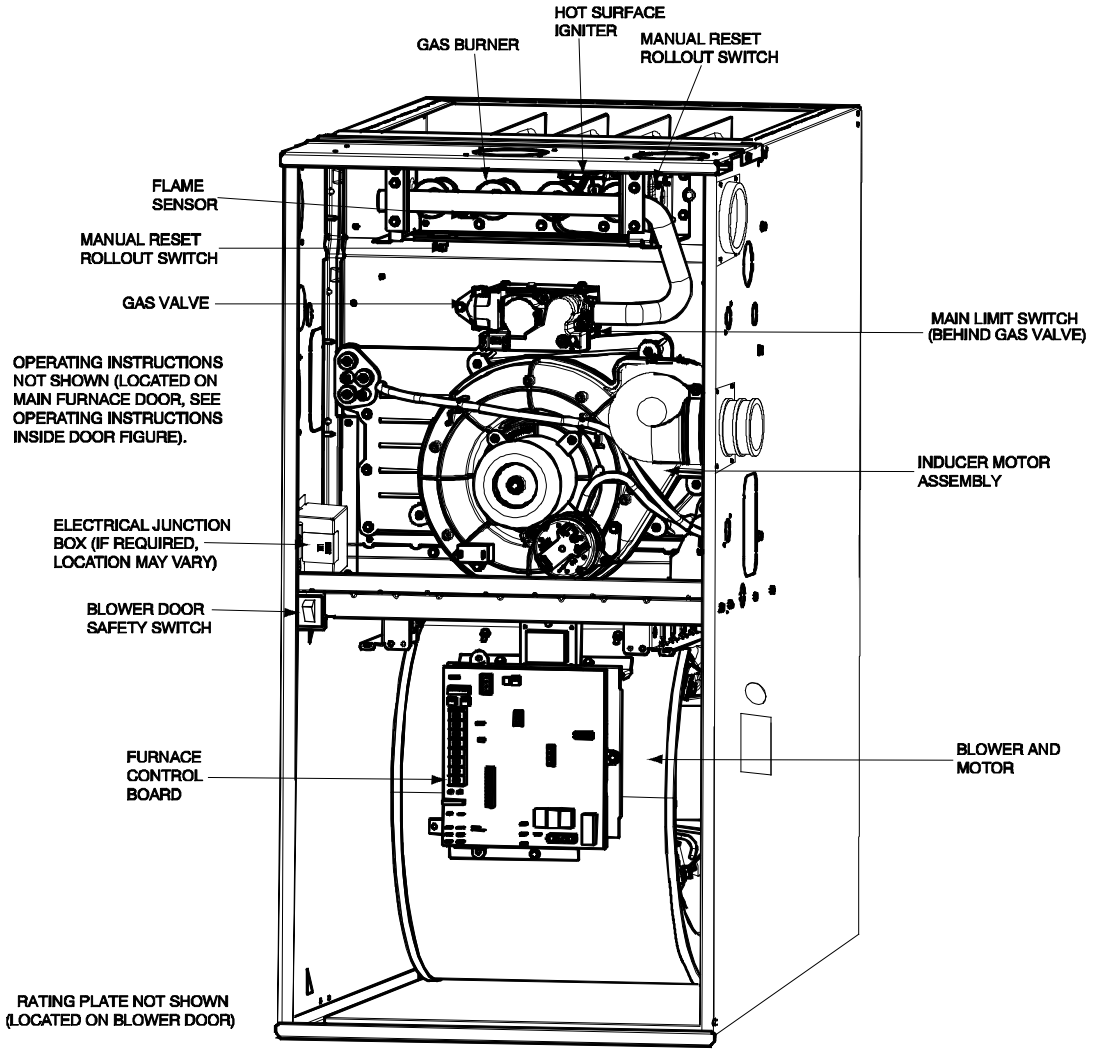

A190145

SPECIFICATIONS

The furnace should be sized to provide 100 percent of the design heating load requirement plus any margin that occurs because of furnace model size capacity increments. None of the furnace model sizes can be used if the heating load is 20,000 BTU or lower. Use Air Conditioning Contractors of America (Manual J and S); American Society of Heating, Refrigerating, and Air-Conditioning Engineers; or other approved engineering method to calculate heating load estimates and select the furnace. Excessive oversizing of the furnace may cause the furnace and/or vent to fail prematurely, customer discomfort and/or vent freezing.

Failure to follow these guidelines is considered faulty installation and/or misapplication of the furnace; and resulting failure, damage, or repairs may impact warranty coverage.

Heating Capacity and Efficiency			040V14-10	040V17-12	060V14-12	060V17-14	080V17-16	080V21-20	100V21-20	120V24-22
Input	High Heat	(BTUH)	40,000	40,000	60,000	60,000	80,000	80,000	100,000	120,000
	Low Heat	(BTUH)	26,000	26,000	39,000	39,000	52,000	52,000	65,000	78,000
Output	High Heat	(BTUH)	39,000	39,000	58,000	58,000	78,000	78,000	97,000	117,000
	Low Heat	(BTUH)	25,000	25,000	38,000	38,000	50,000	51,000	63,000	76,000
Certified Temperature Rise Range °F (°C)		High Heat	40 – 70 (22 – 39)	40 – 70 (22 – 39)	40 – 70 (22 – 39)	40 – 70 (22 – 39)	40 – 70 (22 – 39)	40 – 70 (22 – 39)	40 – 70 (22 – 39)	40 – 70 (22 – 39)
		Low Heat	30 – 60 (17 – 33)	30 – 60 (17 – 33)	30 – 60 (17 – 33)	30 – 60 (17 – 33)	30 – 60 (17 – 33)	30 – 60 (17 – 33)	30 – 60 (17 – 33)	30 – 60 (17 – 33)
Airflow Capacity and Blower Data										
Rated External Static Pressure (in. w.c.)		Heating	0.10	0.10	0.12	0.12	0.15	0.15	0.20	0.20
		Cooling	0.50	0.50	0.50	0.50	0.50	0.50	0.50	0.50
Airflow Delivery @ Rated ESP (CFM)		High Heat	800	850	1110	1135	1450	1555	1865	2120
		Low Heat	560	625	770	860	1130	1200	1435	1625
		Cooling	1030	1105	1115	1475	1655	2005	2005	2190
Cooling Capacity (tons) @ 400, 350 CFM/ton		400 CFM/ ton	2	2.50	2.50	3.50	4	5	5	5
		350 CFM/ ton	2.50	3	3	4	4.50	5.50	5.50	6
Direct–Drive Motor Type			Electronically Communicated Motor (ECM)							
Direct–Drive Motor HP			1/2	1/2	1/2	3/4	3/4	1	1	1
Motor Full Load Amps Default / Low Amp Kit†			6.30	6.50	6.30	10.10	9.20	13.9/10.4	13.9/10.4	11.7
RPM Range			600 – 2000	400 – 1200	600 – 2000	400 – 1200	400 – 1200	400 – 1200	400 – 1200	400 – 1200
Speed Selections			Variable (PWM)							
Blower Wheel Dia x Width		in.	11 x 7	11 x 8	11 x 7	11 x 8	11 x 8	11 x 10	11 x 10	11 x 11
Air Filtration System			Optional Media Cabinet Field Supplied Filter							
Filter Used for Certified Watt Data			KGAWF**06UFR							
Electrical Data										
Input Voltage	Volts–Hertz–Phase		115–60–1							
Operating Voltage Range		Min–Max	104–127							
Maximum Input Amps Default / Low Amp Kit†		Amps	7.0	7.2	7.1	10.9	10.0	14.7/11.3	14.7/11.3	12.6
Unit Ampacity Default / Low Amp Kit†		Amps	9.70	9.80	9.70	14.60	13.40	19.3/14.9	19.4/15.0	16.7
Minimum Wire Size Default / Low Amp Kit†		AWG	14	14	14	14	14	12/14	12/14	12
Maximum Wire Length @ Minimum Wire Size Default / Low Amp Kit†		Feet	38	37	38	25	27	29/24	29/24	34
		(M)	(11.7)	(11.5)	(11.7)	(7.7)	(8.4)	(9.0/7.5)	(9.0/7.5)	(10.5)
Maximum Fuse/Ckt Bkr (Time–Delay Type Recommended)Default / Low Amp Kit†		Amps	15	15	15	15	15	20/15	20/15	20
Transformer Capacity (24vac output)			VA							
External Control Power Available	Heating		24.3 VA							
	Cooling		34.6 VA							
Controls										
Gas Connection Size			1/2" – NPT							
Burners (Monoport)			2	2	3	3	4	4	5	6
Gas Valve (Redundant)	Manufacturer		White Rodgers							
Minimum Inlet Gas pressure (in. wc)			4.50							
Maximum Inlet Gas pressure (in. wc)			13.60							
Manufactured (Mobile) Home Kit			*not approved for MH use*							
Ignition Device			Silicon Nitride							
Heating Blower Control (Heating Off–Delay)			Adjustable: 90, 120, 150, 180 seconds							
Cooling Blower Control (Time Delay Relay)			90 seconds							
Communication System			None							
Thermostat Connections			R, W/W1, W2 Y/Y2, Y1, G, Com 24V, DHUM							
Accessory Connections			EAC (115vac); HUM (24vac); 1–stg. AC (via Y/Y2)							

* See Accessory List for part numbers available.

† Low Amp Kit (KGAPC0101ECM) allows select furnaces to be installed with a 15 Amp Breaker and 14 AWG wire within the listed wire length.

ACCESSORIES

DESCRIPTION	PART NUMBER	040E14--10	040E17--12	060E14--12	060E17--14
Vent Kit - Through the Cabinet	KGADC0101BVC	●	●	●	●
Vent Terminal - Concentric - 2” (51 mm)	KGAVT0701CVT	See Venting Tables			
Vent Terminal - Concentric - 3” (76 mm)	KGAVT0801CVT				
Vent Terminal Bracket - 2” (51 mm)	KGAVT0101BRA				
Vent Terminal Bracket - 3” (76 mm)	KGAVT0201BRA				
Vent Kit – Rubber Coupling	KGAAC0101RVC				
Freeze Protect Kit - Condensate Drain Line Tape	KGAHT0101CFP	●	●	●	●
Freeze Protect Kit - Condensate Trap with Heat Pad	KGAHT0201CFP	●	●	●	●
CPVC to PVC Drain Adapters - 1/2” CPVC to 3/4” PVC	KGAAD0110PVC	●	●	●	●
Horizontal Trap Grommet - Direct Vent	KGACK0101HCK	All 2–Pipe Horizontal			
Condensate Neutralizer Kit	P908–0001	●	●	●	●
External Trap Kit	KGBET0201ETK	●	●	●	●
Downflow Furnace Base Kit for Combustible Floors	KGASB0201ALL	●	●	●	●
Coil Adapter Kits – No Offset	KGADA0101ALL	●	●	●	●
Coil Adapter Kits – Single Offset	KGADA0201ALL	●	●	●	●
Coil Adapter Kits – Double Offset	KGADA0301ALL	●	●	●	●
Return Air Base (Upflow Applications) 14.0–in. wide	KGARP0301B14	●		●	
Return Air Base (Upflow Applications) 17.5–in. wide	KGARP0301B17		●		●
IAQ Device Duct Adapters 20.0–in. IAQ to 16 in. Side Return	KGAAD0101MEC	20”x25” IAQ Devices			
IAQ Device Duct Adapters 24.0–in. IAQ to 16 in. Side Return	KGAAD0201MEC	24”x25” IAQ Devices			
Gas Conversion Kit - Nat to LP	AGAGC9NPS01A	●	●	●	●
Gas Conversion Kit - LP to Nat	AGAGC9PNS01A	●	●	●	●
Gas Valve Tower Port Adapter Kit	92–1003	●	●	●	●
Twinning Kit	AGATWNPME01A				●
Bottom Filter Rack – 14 3/16 inches (360 mm)	KGBFR0401B14	●		●	
Bottom Filter Rack – 17.5 inches (455 mm)	KGBFR0501B17		●		●
Filter Pack (6 pack) – Washable - 16x25x1 (406x635x25 mm)	KGAWF1306UFR	●	●	●	●

● = Used with the model furnace

DESCRIPTION	PART NUMBER	080E17--16	080E21--20	100E21--20	120E24--22
Vent Kit - Through the Cabinet	KGADC0101BVC	●	●	●	●
Vent Terminal - Concentric - 2” (51 mm)	KGAVT0701CVT	See Venting Tables			
Vent Terminal - Concentric - 3” (76 mm)	KGAVT0801CVT				
Vent Terminal Bracket - 2” (51 mm)	KGAVT0101BRA				
Vent Terminal Bracket - 3” (76 mm)	KGAVT0201BRA				
Vent Kit – Rubber Coupling	KGAAC0101RVC				
Freeze Protect Kit - Condensate Drain Line Tape	KGAHT0101CFP	●	●	●	●
Freeze Protect Kit - Condensate Trap with Heat Pad	KGAHT0201CFP	●	●	●	●
CPVC to PVC Drain Adapters - 1/2” CPVC to 3/4” PVC	KGAAD0110PVC	●	●	●	●
Horizontal Trap Grommet - Direct Vent	KGACK0101HCK	All 2–Pipe Horizontal			
Condensate Neutralizer Kit	P908–0001	●	●	●	●
External Trap Kit	KGBET0201ETK	●	●	●	●
Downflow Furnace Base Kit for Combustible Floors	KGASB0201ALL	●	●	●	●
Coil Adapter Kits – No Offset	KGADA0101ALL	●	●	●	●
Coil Adapter Kits – Single Offset	KGADA0201ALL	●	●	●	●
Coil Adapter Kits – Double Offset	KGADA0301ALL	●	●	●	●
Return Air Base (Upflow Applications) 17.5–in. wide	KGARP0301B17	●			
Return Air Base (Upflow Applications) 21.0–in. wide	KGARP0301B21		●	●	
Return Air Base (Upflow Applications) 24.5–in. wide	KGARP0301B24				●
IAQ Device Duct Adapters 20.0–in. IAQ to 16 in. Side Return	KGAAD0101MEC	20”x25” IAQ Devices			
IAQ Device Duct Adapters 24.0–in. IAQ to 16 in. Side Return	KGAAD0201MEC	24”x25” IAQ Devices			
Gas Conversion Kit - Nat to LP	AGAGC9NPS01A	●	●	●	●
Gas Conversion Kit - LP to Nat	AGAGC9PNS01A	●	●	●	●
Gas Valve Tower Port Adapter Kit	92–1003	●	●	●	●
Twinning Kit	AGATWNPME01A	●		●	●
Bottom Filter Rack – 17.5 inches (455 mm)	KGBFR0501B17	●			
Bottom Filter Rack – 21 inches (533 mm)	KGBFR0601B21		●	●	
Bottom Filter Rack – 24.5 inches (622 mm)	KGBFR0701B24				●
Filter Pack (6 pack) – Washable - 16x25x1 (406x635x25 mm)	KGAWF1306UFR	●			
Filter Pack (6 pack) – Washable - 24x25x1 (610x635x25 mm)	KGAWF1506UFR		●	●	●
Lower Amp Kit	KGAPC0101ECM		●	●	

● = Used with the model furnace

ACCESSORIES (CONTINUED)

DESCRIPTION		
Gas Orifice Kit - #42 (Nat Gas)	LH32DB207	See Installation Instructions for model, altitude, and heat value usages.
Gas Orifice Kit - #43 (Nat Gas)	LH32DB202	
Gas Orifice Kit - #44 (Nat Gas)	LH32DB200	
Gas Orifice Kit - #45 (Nat Gas)	LH32DB205	
Gas Orifice Kit - #46 (Nat Gas)	LH32DB208	
Gas Orifice Kit - #47 (Nat Gas)	LH32DB078	
Gas Orifice Kit - #48 (Nat Gas)	LH32DB076	
Gas Orifice Kit - #54 (LP)	LH32DB203	
Gas Orifice Kit - #55 (LP)	LH32DB201	
Gas Orifice Kit - #56 (LP)	LH32DB206	
Gas Orifice Kit - 1.25mm (LP)	LH32DB209	
Gas Orifice Kit - 1.30mm (LP)	LH32DB210	

DESCRIPTION	ACCESSORY
HUMIDIFIER	Model HUM
HEAT RECOVERY VENTILATOR	Model HRV
ENERGY RECOVERY VENTILATOR	Model ERV
UV LIGHTS	Model UVL

Carrier has a wide variety of thermostats for your system, please visit **www.Carrier.com** to see all thermostat and IAQ products.

DESCRIPTION	ACCESSORY	14”	17”	21”	24”
Carrier Carbon Monoxide Alarm (10 pack)	COALMCCNRB02–A10	X	X	X	X
Carrier Infinity Air Purifier - 16x25 (407x635 mm)	DGAPAXX1625	X	X		
Carrier Infinity Air Purifier - 20x25 (508x635 mm)	DGAPAXX2025			X	X
Carrier Infinity Air Purifier Repl. Filter- 16x25 (407x635 mm)	PGAPXCAR1625A02	X	X		
Carrier Infinity Air Purifier Repl. Filter- 20x25 (508x635 mm)	PGAPXCAR2025A02			X	X
Cartridge Media Filter - 16” (407 mm) (MERV 11)	FILXXCAR0116	X	X		
Cartridge Media Filter - 16” (407 mm) (MERV 8)	FILXXCAR0016	X	X		
Cartridge Media Filter - 20” (508 mm) (MERV 8)	FILXXCAR0020			X	
Cartridge Media Filter - 20” (508 mm) (MERV11)	FILXXCAR0120			X	
Cartridge Media Filter - 24” (610 mm) (MERV 8)	FILXXCAR0024				X
Cartridge Media Filter - 24” (610 mm) (MERV11)	FILXXCAR0124				X
EZ Flex Cabinet Side or Bottom – 16”	EZXCAB– –0016	X	X		
EZ Flex Cabinet Side or Bottom – 20”	EZXCAB– –0020			X	X
EZ Flex Replacement Filters 16” MERV 10	EXPXXFIL0016	X	X		
EZ Flex Replacement Filters 16” MERV 13	EXPXXFIL0316	X	X		
EZ Flex Replacement Filters 20” MERV 10	EXPXXFIL0020			X	
EZ Flex Replacement Filters 20” MERV 13	EXPXXFIL0320			X	
EZ Flex Replacement Filters 24” MERV 10	EXPXXFIL0024				X
EZ Flex Replacement Filters 24” MERV 13	EXPXXFIL0324				X
EZ-Flex Filter with End Caps - 16” (407 mm) (MERV 10)	EXPXXUNV0016	X	X		
EZ-Flex Filter with End Caps - 16” (407 mm) (MERV 13)	EXPXXUNV0316	X	X		
EZ-Flex Filter with End Caps - 20” (508 mm) (MERV 10)	EXPXXUNV0020			X	
EZ-Flex Filter with End Caps - 20” (508 mm) (MERV 13)	EXPXXUNV0320			X	
EZ-Flex Filter with End Caps - 24” (610 mm) (MERV 10)	EXPXXUNV0024				X
EZ-Flex Filter with End Caps - 24” (610 mm) (MERV 13)	EXPXXUNV0324				X
Media Filter Cabinet – 20”	FILCABXL0020			X	
Media Filter Cabinet – 24”	FILCABXL0024				X
Media Filter Cabinet –16”	FILCABXL0016	X	X		

AIR DELIVERY - CFM

(SW1−5 and SW4−3 set to OFF, except as indicated. See notes 1 and 2.)													
Unit Size: 040V14−10	**Clg/CF Switch settings**			**External Static Pressure (ESP)**									
Clg Switches:	SW2−8	SW2−7	SW2−6	0.1	0.2	0.3	0.4	0.5	0.6	0.7	0.8	0.9	1.0
Clg Default:	OFF	OFF	OFF	1125	1105	1080	1055	1030	1005	975	955	930	905
Cooling (SW2−8,7,6)	OFF	OFF	ON	605	565	525	485	445	See note 4				
	OFF	ON	OFF	760	730	695	655	625	590	555	525	490	455
	OFF	ON	ON	950	925	900	870	840	810	785	760	730	705
	ON	OFF	OFF	1125	1105	1080	1055	1030	1005	975	955	930	905
	ON	OFF	ON	1130	1105	1080	1055	1030	1005	980	955	930	905
	ON	ON	OFF	1130	1105	1080	1055	1030	1005	980	955	930	905
	ON	ON	ON	1130	1105	1080	1055	1030	1005	980	955	930	905
	Maximum Clg Airflow[2]			1130	1105	1080	1055	1030	1005	980	955	930	905
CF Switches	SW2−5	SW2−4	SW2−3										
Low−Clg Default:	OFF	OFF	OFF	605	565	525	485	445	See note 4				
Low−Cooling (SW2−5,4,3)	OFF	OFF	ON	605	565	525	485	445	See note 4				
	OFF	ON	OFF	760	730	695	655	625	590	555	525	490	455
	OFF	ON	ON	950	925	900	870	840	810	785	760	730	705
	ON	OFF	OFF	1125	1105	1080	1055	1030	1005	975	955	930	905
	ON	OFF	ON	1130	1105	1080	1055	1030	1005	980	955	930	905
	ON	ON	OFF	1130	1105	1080	1055	1030	1005	980	955	930	905
	ON	ON	ON	1130	1105	1080	1055	1030	1005	980	955	930	905
Cont. Fan Default:	OFF	OFF	OFF	385	335	See Note 4							
Continuous Fan (SW2−5,4,3)	OFF	OFF	ON	245	180	See Note 4							
	OFF	ON	OFF	310	245	See Note 4							
	OFF	ON	ON	385	335	See Note 4							
	ON	OFF	OFF	385	335	See Note 4							
	ON	OFF	ON	385	335	See Note 4							
	ON	ON	OFF	385	335	See Note 4							
	ON	ON	ON	385	335	See Note 4							
Heating (SW1)	High Heat Airflow[3]			800	770	730	700	665	635	605	570	540	510
	Low Heat Airflow[3]			560	520	470	425	390	See note 4				
Unit Size: 040V17−12	**Clg/CF Switch settings**			**External Static Pressure (ESP)**									
Clg Switches:	SW2−8	SW2−7	SW2−6	0.1	0.2	0.3	0.4	0.5	0.6	0.7	0.8	0.9	1.0
Clg Default:	OFF	OFF	OFF	1240	1210	1180	1145	1105	1060	1005	950	895	835
Cooling (SW2−8,7,6)	OFF	OFF	ON	585	540	490	445	400	360	315	265	210	155
	OFF	ON	OFF	780	740	695	655	620	580	545	510	480	445
	OFF	ON	ON	975	945	910	870	835	805	775	740	710	680
	ON	OFF	OFF	1170	1140	1115	1085	1050	1020	985	945	890	835
	ON	OFF	ON	1240	1210	1180	1145	1105	1060	1005	950	895	835
	ON	ON	OFF	1240	1210	1180	1145	1105	1060	1005	950	895	835
	ON	ON	ON	1240	1210	1180	1145	1105	1060	1005	950	895	835
	Maximum Clg Airflow[2]			1240	1210	1180	1145	1105	1060	1005	950	895	835
CF Switches	SW2−5	SW2−4	SW2−3										
Low−Clg Default:	OFF	OFF	OFF	585	540	490	445	400	See note 4				
Low−Cooling (SW2−5,4,3)	OFF	OFF	ON	585	540	490	445	400	See note 4				
	OFF	ON	OFF	780	740	695	655	620	580	545	510	480	445
	OFF	ON	ON	975	945	910	870	835	805	775	740	710	680
	ON	OFF	OFF	1170	1140	1115	1085	1050	1020	985	945	890	835
	ON	OFF	ON	1240	1210	1180	1145	1105	1060	1005	950	895	835
	ON	ON	OFF	1240	1210	1180	1145	1105	1060	1005	950	895	835
	ON	ON	ON	1240	1210	1180	1145	1105	1060	1005	950	895	835
Cont. Fan Default:	OFF	OFF	OFF	585	540	490	445	400	See note 4				
Continuous Fan (SW2−5,4,3)	OFF	OFF	ON	305	235	See Note 4							
	OFF	ON	OFF	470	410	350	See Note 4						
	OFF	ON	ON	585	540	490	445	400	See note 4				
	ON	OFF	OFF	585	540	490	445	400	See note 4				
	ON	OFF	ON	585	540	490	445	400	See note 4				
	ON	ON	OFF	585	540	490	445	400	See note 4				
	ON	ON	ON	585	540	490	445	400	See note 4				
Heating (SW1)	High Heat Airflow[3]			850	810	770	730	700	660	630	595	560	530
	Low Heat Airflow[3]			625	580	535	490	445	405	365	320	270	220

AIR DELIVERY - CFM (CONTINUED)

(SW1−5 and SW4−3 set to OFF, except as indicated. See notes 1 and 2.)													
Unit Size: 060V14−12	**Clg/CF Switch settings**			**External Static Pressure (ESP)**									
Clg Switches:	SW2−8	SW2−7	SW2−6	0.1	0.2	0.3	0.4	0.5	0.6	0.7	0.8	0.9	1.0
Clg Default:	OFF	OFF	OFF	1180	1150	1130	1100	1075	1045	1020	995	965	935
Cooling (SW2−8,7,6)	OFF	OFF	ON	625	585	540	495	445	See note 4				
	OFF	ON	OFF	820	785	745	710	670	635	595	560	525	490
	OFF	ON	ON	1000	970	935	905	875	845	815	785	755	725
	ON	OFF	OFF	1180	1150	1130	1100	1075	1045	1020	995	965	935
	ON	OFF	ON	1220	1195	1170	1140	1115	1090	1065	1035	1010	985
	ON	ON	OFF	1220	1195	1170	1140	1115	1090	1065	1035	1010	985
	ON	ON	ON	1220	1195	1170	1140	1115	1090	1065	1035	1010	985
	Maximum Clg Airflow[2]			1220	1195	1170	1140	1115	1090	1065	1035	1010	985
CF Switches	SW2−5	SW2−4	SW2−3										
Low−Clg Default:	OFF	OFF	OFF	625	585	540	495	445	See note 4				
Low−Cooling (SW2−5,4,3)	OFF	OFF	ON	625	585	540	495	445	See note 4				
	OFF	ON	OFF	820	785	745	710	670	635	595	560	525	490
	OFF	ON	ON	1000	970	935	905	875	845	815	785	755	725
	ON	OFF	OFF	1180	1150	1130	1100	1075	1045	1020	995	965	935
	ON	OFF	ON	1220	1195	1170	1140	1115	1090	1065	1035	1010	985
	ON	ON	OFF	1220	1195	1170	1140	1115	1090	1065	1035	1010	985
	ON	ON	ON	1220	1195	1170	1140	1115	1090	1065	1035	1010	985
Cont. Fan Default:	OFF	OFF	OFF	375	315	See Note 4							
Continuous Fan (SW2−5,4,3)	OFF	OFF	ON	200	125	See Note 4							
	OFF	ON	OFF	285	215	See Note 4							
	OFF	ON	ON	375	315	See Note 4							
	ON	OFF	OFF	375	315	See Note 4							
	ON	OFF	ON	375	315	See Note 4							
	ON	ON	OFF	375	315	See Note 4							
	ON	ON	ON	375	315	See Note 4							
Heating (SW1)	High Heat Airflow[3]			1115	1090	1060	1035	1010	980	955	930	905	875
	Low Heat Airflow[3]			780	740	695	655	615	575	530	490	450	405
Unit Size: 060V17−14	**Clg/CF Switch settings**			**External Static Pressure (ESP)**									
Clg Switches:	SW2−8	SW2−7	SW2−6	0.1	0.2	0.3	0.4	0.5	0.6	0.7	0.8	0.9	1.0
Clg Default:	OFF	OFF	OFF	1330	1295	1260	1220	1190	1150	1110	1075	1045	1005
Cooling (SW2−8,7,6)	OFF	OFF	ON	725	600	435	280	210	See note 4				
	OFF	ON	OFF	780	725	660	615	540	See note 4				
	OFF	ON	ON	975	925	875	835	785	750	690	655	610	570
	ON	OFF	OFF	1160	1120	1090	1045	1010	970	920	885	840	800
	ON	OFF	ON	1330	1295	1260	1220	1190	1150	1110	1075	1045	1005
	ON	ON	OFF	1705	1650	1595	1545	1475	1415	1340	1275	1200	1105
	ON	ON	ON	1705	1650	1595	1545	1475	1415	1340	1275	1200	1105
	Maximum Clg Airflow[2]			1705	1650	1595	1545	1475	1415	1340	1275	1200	1105
CF Switches	SW2−5	SW2−4	SW2−3										
Low−Clg Default:	OFF	OFF	OFF	725	600	435	280	210	See note 4				
Low−Cooling (SW2−5,4,3)	OFF	OFF	ON	725	600	435	280	210	See note 4				
	OFF	ON	OFF	780	725	660	615	540	See note 4				
	OFF	ON	ON	975	925	875	835	785	750	690	655	610	570
	ON	OFF	OFF	1160	1120	1090	1045	1010	970	920	885	840	800
	ON	OFF	ON	1330	1295	1260	1220	1190	1150	1110	1075	1045	1005
	ON	ON	OFF	1705	1650	1595	1545	1475	1415	1340	1275	1200	1105
	ON	ON	ON	1705	1650	1595	1545	1475	1415	1340	1275	1200	1105
Cont. Fan Default:	OFF	OFF	OFF	725	600	435	280	210	See note 4				
Continuous Fan (SW2−5,4,3)	OFF	OFF	ON	725	600	435	280	210	See note 4				
	OFF	ON	OFF	780	725	660	615	540	See note 4				
	OFF	ON	ON	975	925	875	835	785	750	690	655	610	570
	ON	OFF	OFF	975	925	875	835	785	750	690	655	610	570
	ON	OFF	ON	975	925	875	835	785	750	690	655	610	570
	ON	ON	OFF	975	925	875	835	785	750	690	655	610	570
	ON	ON	ON	975	925	875	835	785	750	690	655	610	570
Heating (SW1)	High Heat Airflow[3]			1145	1105	1075	1030	995	955	905	870	825	785
	Low Heat Airflow[3]			870	820	760	720	655	620	560	525	470	435

AIR DELIVERY - CFM (CONTINUED)

(SW1−5 and SW4−3 set to OFF, except as indicated. See notes 1 and 2.)													
Unit Size: 080V17−16	**Clg/CF Switch settings**			**External Static Pressure (ESP)**									
Clg Switches:	SW2−8	SW2−7	SW2−6	0.1	0.2	0.3	0.4	0.5	0.6	0.7	0.8	0.9	1.0
Clg Default:	OFF	OFF	OFF	1595	1560	1530	1500	1470	1440	1405	1370	1340	1290
Cooling (SW2−8,7,6)	OFF	OFF	ON	625	555	495	425	360	300	See Note 4			
	OFF	ON	OFF	810	755	700	645	595	540	480	425	380	330
	OFF	ON	ON	1040	995	950	900	860	815	770	725	680	630
	ON	OFF	OFF	1215	1175	1135	1095	1055	1015	975	935	900	860
	ON	OFF	ON	1390	1355	1320	1285	1245	1210	1175	1140	1105	1070
	ON	ON	OFF	1595	1560	1530	1500	1470	1440	1405	1370	1340	1290
	ON	ON	ON	1790	1760	1735	1700	1655	1610	1570	1485	1395	1295
	Maximum Clg Airflow[2]			1790	1760	1735	1700	1655	1610	1570	1485	1395	1295
CF Switches	SW2−5	SW2−4	SW2−3										
Low−Clg Default:	OFF	OFF	OFF	625	555	495	425	360	300	See Note 4			
Low−Cooling (SW2−5,4,3)	OFF	OFF	ON	625	555	495	425	360	300	See Note 4			
	OFF	ON	OFF	810	755	700	645	595	540	480	425	380	330
	OFF	ON	ON	1040	995	950	900	860	815	770	725	680	630
	ON	OFF	OFF	1215	1175	1135	1095	1055	1015	975	935	900	860
	ON	OFF	ON	1390	1355	1320	1285	1245	1210	1175	1140	1105	1070
	ON	ON	OFF	1595	1560	1530	1500	1470	1440	1405	1370	1340	1290
	ON	ON	ON	1790	1760	1735	1700	1655	1610	1570	1485	1395	1295
Cont. Fan Default:	OFF	OFF	OFF	625	555	495	425	360	300	See Note 4			
Continuous Fan (SW2−5,4,3)	OFF	OFF	ON	465	390	300	See Note 4						
	OFF	ON	OFF	625	555	495	425	360	300	See Note 4			
	OFF	ON	ON	690	630	570	510	445	385	See Note 4			
	ON	OFF	OFF	690	630	570	510	445	385	See Note 4			
	ON	OFF	ON	690	630	570	510	445	385	See Note 4			
	ON	ON	OFF	690	630	570	510	445	385	See Note 4			
	ON	ON	ON	690	630	570	510	445	385	See Note 4			
Heating (SW1)	High Heat Airflow[3]			1470	1435	1400	1365	1330	1295	1260	1225	1190	1155
	Low Heat Airflow[3]			1150	1110	1070	1030	990	950	910	870	830	790
Unit Size: 080V21−20	**Clg/CF Switch settings**			**External Static Pressure (ESP)**									
Clg Switches:	SW2−8	SW2−7	SW2−6	0.1	0.2	0.3	0.4	0.5	0.6	0.7	0.8	0.9	1.0
Clg Default:	OFF	OFF	OFF	1905	1870	1825	1785	1750	1700	1665	1625	1560	1460
Cooling (SW2−8,7,6)	OFF	OFF	ON	950	770	620	515	440	365	See Note 4			
	OFF	ON	OFF	1015	935	880	825	765	690	625	580	See	note
	OFF	ON	ON	1155	1105	1040	990	920	875	815	755	710	645
	ON	OFF	OFF	1335	1290	1245	1190	1145	1085	1040	990	930	890
	ON	OFF	ON	1520	1485	1435	1390	1340	1300	1255	1200	1160	1115
	ON	ON	OFF	1905	1870	1825	1785	1750	1700	1665	1625	1560	1460
	ON	ON	ON	2290	2230	2160	2085	2005	1915	1820	1730	1640	1525
	Maximum Clg Airflow[2]			2290	2230	2160	2085	2005	1915	1820	1730	1640	1525
CF Switches	SW2−5	SW2−4	SW2−3										
Low−Clg Default:	OFF	OFF	OFF	950	770	620	515	440	365	See Note 4			
Low−Cooling (SW2−5,4,3)	OFF	OFF	ON	645	540	435	See Note 4						
	OFF	ON	OFF	950	770	620	515	440	365	See Note 4			
	OFF	ON	ON	1015	935	880	825	765	690	625	580	See	note
	ON	OFF	OFF	1155	1105	1040	990	920	875	815	755	710	645
	ON	OFF	ON	1335	1290	1245	1190	1145	1085	1040	990	930	890
	ON	ON	OFF	1520	1485	1435	1390	1340	1300	1255	1200	1160	1115
	ON	ON	ON	1905	1870	1825	1785	1750	1700	1665	1625	1560	1460
Cont. Fan Default:	OFF	OFF	OFF	950	770	620	515	440	365	See Note 4			
Continuous Fan (SW2−5,4,3)	OFF	OFF	ON	645	540	435	See Note 4						
	OFF	ON	OFF	950	770	620	515	440	365	See Note 4			
	OFF	ON	ON	1015	935	880	825	765	690	625	580	See	note
	ON	OFF	OFF	1155	1105	1040	990	920	875	815	755	710	645
	ON	OFF	ON	1335	1290	1245	1190	1145	1085	1040	990	930	890
	ON	ON	OFF	1520	1485	1435	1390	1340	1300	1255	1200	1160	1115
	ON	ON	ON	1520	1485	1435	1390	1340	1300	1255	1200	1160	1115
Heating (SW1)	High Heat Airflow[3]			1575	1535	1485	1445	1400	1350	1310	1260	1215	1170
	Low Heat Airflow[3]			1230	1170	1125	1065	1015	955	900	855	795	755

AIR DELIVERY - CFM (CONTINUED)

(SW1−5 and SW4−3 set to OFF, except as indicated. See notes 1 and 2.)													
Unit Size: 100V21−20	**Clg/CF Switch settings**			**External Static Pressure (ESP)**									
Clg Switches:	SW2−8	SW2−7	SW2−6	0.1	0.2	0.3	0.4	0.5	0.6	0.7	0.8	0.9	1.0
Clg Default:	OFF	OFF	OFF	1890	1845	1800	1755	1700	1655	1610	1560	1510	1460
Cooling (SW2−8,7,6)	OFF	OFF	ON	1015	825	630	485	405	325	See Note 4			
	OFF	ON	OFF	1080	895	815	740	690	615	555	475	See	note
	OFF	ON	ON	1155	1080	1020	940	890	825	785	710	660	590
	ON	OFF	OFF	1310	1260	1195	1140	1075	1025	970	925	875	810
	ON	OFF	ON	1520	1475	1425	1365	1315	1255	1210	1155	1110	1055
	ON	ON	OFF	1890	1845	1800	1755	1700	1655	1610	1560	1510	1460
	ON	ON	ON	2290	2230	2160	2085	2005	1915	1820	1730	1640	1525
	Maximum Clg Airflow[2]			2290	2230	2160	2085	2005	1915	1820	1730	1640	1525
CF Switches	SW2−5	SW2−4	SW2−3										
Low−Clg Default:	OFF	OFF	OFF	1015	825	630	485	405	325	See Note 4			
Low−Cooling (SW2−5,4,3)	OFF	OFF	ON	745	640	535	See Note 4						
	OFF	ON	OFF	1015	825	630	485	405	325	See Note 4			
	OFF	ON	ON	1080	895	815	740	690	615	555	475	See	note
	ON	OFF	OFF	1155	1080	1020	940	890	825	785	710	660	590
	ON	OFF	ON	1310	1260	1195	1140	1075	1025	970	925	875	810
	ON	ON	OFF	1520	1475	1425	1365	1315	1255	1210	1155	1110	1055
	ON	ON	ON	1890	1845	1800	1755	1700	1655	1610	1560	1510	1460
Cont. Fan Default:	OFF	OFF	OFF	1015	825	630	485	405	325	See Note 4			
Continuous Fan (SW2−5,4,3)	OFF	OFF	ON	745	640	535	See Note 4						
	OFF	ON	OFF	1015	825	630	485	405	325	See Note 4			
	OFF	ON	ON	1080	895	815	740	690	615	555	475	See	note
	ON	OFF	OFF	1155	1080	1020	940	890	825	785	710	660	590
	ON	OFF	ON	1155	1080	1020	940	890	825	785	710	660	590
	ON	ON	OFF	1155	1080	1020	940	890	825	785	710	660	590
	ON	ON	ON	1155	1080	1020	940	890	825	785	710	660	590
Heating (SW1)	High Heat Airflow[3]			1905	1865	1825	1775	1730	1685	1640	1590	1545	1490
	Low Heat Airflow[3]			1480	1435	1375	1330	1265	1215	1160	1115	1060	1005
Unit Size: 120V24−22	**Clg/CF Switch settings**			**External Static Pressure (ESP)**									
Clg Switches:	SW2−8	SW2−7	SW2−6	0.1	0.2	0.3	0.4	0.5	0.6	0.7	0.8	0.9	1.0
Clg Default:	OFF	OFF	OFF	2060	2015	1975	1930	1885	1840	1790	1750	1705	1630
Cooling (SW2−8,7,6)	OFF	OFF	ON	865	775	690	595	505	425	See Note 4			
	OFF	ON	OFF	1080	1005	935	860	785	705	625	555	490	425
	OFF	ON	ON	1285	1220	1150	1085	1020	960	895	820	750	690
	ON	OFF	OFF	1465	1410	1350	1285	1230	1175	1115	1060	1000	935
	ON	OFF	ON	1685	1635	1585	1530	1475	1420	1375	1325	1270	1225
	ON	ON	OFF	2060	2015	1975	1930	1885	1840	1790	1750	1705	1630
	ON	ON	ON	2265	2225	2180	2145	2100	2060	2010	1895	1770	1645
	Maximum Clg Airflow[2]			2320	2310	2270	2230	2190	2135	2020	1895	1770	1645
CF Switches	SW2−5	SW2−4	SW2−3										
Low−Clg Default:	OFF	OFF	OFF	865	775	690	595	505	425	See Note 4			
Low−Cooling (SW2−5,4,3)	OFF	OFF	ON	585	470	See Note 4							
	OFF	ON	OFF	865	775	690	595	505	425	See Note 4			
	OFF	ON	ON	1080	1005	935	860	785	705	625	555	490	425
	ON	OFF	OFF	1285	1220	1150	1085	1020	960	895	820	750	690
	ON	OFF	ON	1465	1410	1350	1285	1230	1175	1115	1060	1000	935
	ON	ON	OFF	1685	1635	1585	1530	1475	1420	1375	1325	1270	1225
	ON	ON	ON	2060	2015	1975	1930	1885	1840	1790	1750	1705	1630
Cont. Fan Default:	OFF	OFF	OFF	865	775	690	595	505	425	See Note 4			
Continuous Fan (SW2−5,4,3)	OFF	OFF	ON	585	470	See Note 4							
	OFF	ON	OFF	730	630	See Note 4							
	OFF	ON	ON	865	775	690	595	505	425	See Note 4			
	ON	OFF	OFF	865	775	690	595	505	425	See Note 4			
	ON	OFF	ON	865	775	690	595	505	425	See Note 4			
	ON	ON	OFF	865	775	690	595	505	425	See Note 4			
	ON	ON	ON	865	775	690	595	505	425	See Note 4			
Heating (SW1)	High Heat Airflow[3]			2165	2120	2075	2030	1985	1940	1895	1850	1770	1645
	Low Heat Airflow[3]			1675	1625	1575	1525	1475	1425	1375	1325	1275	1225

NOTE: See notes at end of table.

Cooling[4] and Heating Air Delivery - CFM (Bottom Return[5] with Filter) - NOTES

1. Nominal 350 CFM/ton cooling airflow is delivered with SW1−5 and SW4−3 set to OFF.
   Set both SW1−5 to ON for nominal 400CFM/ton (+15% airflow)
   Set SW4−3 to ON for nominal 325 CFM/ton (−7% airflow)
   Set both SW1−5 and SW4−3 to ON for nominal 370CFM/ton (+7% airflow)
   The above adjustments in airflow are subject to motor horsepower range/capacity
   This applies to Cooling and Low−Cooling airflow, but does not affect continuous fan airflow.
2. Maximum cooling airflow is achieved when switches SW2−6, SW2−7, SW2−8 and SW1−5 are set to ON, and SW4−3 is set to OFF.
3. All heating CFM's are when comfort/efficiency adjustment switch SW1−4 is set to OFF.
4. Ductwork must be sized for high−heating CFM within the operational range of ESP. Operation within the blank areas of the chart is not recommended because high−heat operation will be above 1.0 ESP.
5. All airflows on 21" (533 mm) casing size furnaces are 5% less on side−return only installations.
6. Side returns for 24.5" (622 mm) casing sizes require two sides, or a side and bottom to allow sufficient airflow at the return of the furnace.
7. Airflows over 1800 CFM require bottom return, two−side return, or bottom and side return or excessive watt draw may result. A minimum filter size of 20x25" (508 x 635 mm) is required.

MAXIMUM ALLOWABLE EXPOSED VENT LENGTH

Table 1 – Maximum Allowable Exposed Vent Lengths in Unconditioned Space Insulation Table - Ft.

Winter Design Temp °F	Unit Size	40,000* BTUH									60,000 BTUH											
		Uninsulated			3/8-in. Insulation			1/2-in. Insulation			Uninsulated				3/8-in. Insulation				1/2-in. Insulation			
	Pipe Dia. in.	1 ½	2	2 ½	1 ½	2	2 ½	1 ½	2	2 ½	1 ½	2	2 ½	3	1 ½	2	2 ½	3	1 ½	2	2 ½	3
	20	20	20	20	20	50	45	20	60	50	20	30	30	25	20	75	65	60	20	85	75	65
	0	10	5	5	20	25	20	20	30	25	15	15	10	10	20	40	30	25	20	45	40	30
	-20	5			20	15	10	20	20	15	10	5			20	25	20	15	20	30	25	20
	-40				15	10	5	15	15	10	5				20	15	15	10	20	20	15	10

Winter Design Temp °F	Unit Size	80,000 BTUH														
		Uninsulated					3/8-in. Insulation					1/2-in. Insulation				
	Pipe Dia. in.	1 ½	2	2 ½	3	4	1 ½	2	2 ½	3	4	1 ½	2	2 ½	3	4
	20	15	40	40	35	30	15	50	90	75	65	15	50	70	70	70
	0	15	20	15	10	5	15	50	45	35	30	15	50	50	40	35
	-20	15	10	5			15	35	30	20	15	15	40	30	25	15
	-40	10	5				15	25	20	15	5	15	30	25	20	10

Winter Design Temp °F	Unit Size	100,000 BTUH											
		Uninsulated				3/8-in. Insulation				1/2-in. Insulation			
	Pipe Dia. in.	2	2 ½	3	4	2	2 ½	3	4	2	2 ½	3	4
	20	20	50	40	35	20	80	95	80	20	80	105	90
	0	20	20	15	10	20	55	45	35	20	65	55	45
	-20	15	10	5		20	35	30	20	20	45	35	25
	-40	10	5			20	25	20	10	20	30	25	15

Winter Design Temp °F	Unit Size	120,000 BTUH									140,000 BTUH								
		Uninsulated			3/8-in. Insulation			1/2-in. Insulation			Uninsulated			3/8-in. Insulation			1/2-in. Insulation		
	Pipe Dia. in.	2 ½	3	4	2 ½	3	4	2 ½	3	4	2 ½	3	4	2 ½	3	4	2 ½	3	4
	20	10	50	40	10	75	95	10	75	105	5	55	50	5	65	105	5	65	125
	0	10	20	15	10	55	45	10	65	50	5	25	15	5	65	50	5	65	60
	-20	10	10		10	35	25	10	45	30	5	10	5	5	45	30	5	50	40
	-40	10	5		10	25	15	10	30	20	5	5		5	30	20	5	35	25

Maximum Allowable Exposed Vent Length in Unconditioned Space - Meters

Winter Design Temp °C	Unit Size	40,000* BTUH									60,000 BTUH											
		Uninsulated			3/8-in. Insulation			1/2-in. Insulation			Uninsulated				3/8-in. Insulation				1/2-in. Insulation			
	Pipe Dia. mm	38	51	64	38	51	64	38	51	64	38	51	64	76	38	51	64	76	38	51	64	76
	-7	6.1	6.1	6.1	6.1	15.2	13.7	6.1	18.3	15.2	6.1	9.1	9.1	7.6	6.1	22.9	19.8	18.3	6.1	25.9	22.9	19.8
	-18	3.0	1.5	1.5	6.1	7.6	6.1	6.1	9.1	7.6	4.6	4.6	3.0	3.0	6.1	12.2	9.1	7.6	6.1	13.7	12.2	9.1
	-29	1.5			6.1	4.6	3.0	6.1	6.1	4.6	3.0	1.5			6.1	7.6	6.1	4.6	6.1	9.1	7.6	6.1
	-40				4.6	3.0	1.5	4.6	4.6	3.0	1.5				6.1	4.6	4.6	3.0	6.1	6.1	4.6	3.0

Winter Design Temp °C	Unit Size	80,000 BTUH														
		Uninsulated					3/8-in. Insulation					1/2-in. Insulation				
	Pipe Dia. mm	38	51	64	76	102	38	51	64	76	102	38	51	64	76	102
	-7	4.6	12.2	12.2	10.7	9.1	4.6	15.2	27.4	22.9	19.8	4.6	15.2	21.3	21.3	21.3
	-18	4.6	6.1	4.6	3.0	1.5	4.6	15.2	13.7	10.7	9.1	4.6	15.2	15.2	12.2	10.7
	-29	4.6	3.0	1.5			4.6	10.7	9.1	6.1	4.6	4.6	12.2	9.1	7.6	4.6
	-40	3.0	1.5				4.6	7.6	6.1	4.6	1.5	4.6	9.1	7.6	6.1	3.0

Winter Design Temp °C	Unit Size	100,000 BTUH											
		Uninsulated				3/8-in. Insulation				1/2-in. Insulation			
	Pipe Dia. mm	51	64	76	102	51	64	76	102	51	64	76	102
	-7	6.1	15.2	12.2	10.7	6.1	24.4	28.9	24.4	6.1	24.4	32.0	27.4
	-18	6.1	6.1	4.6	3.0	6.1	16.8	13.7	10.7	6.1	19.8	16.7	13.7
	-29	4.6	3.0	1.5		6.1	10.7	9.1	6.1	6.1	13.7	10.7	7.6
	-40	3.0	1.5			6.1	7.6	6.1	3.0	6.1	9.1	7.6	4.6

Winter Design Temp °C	Unit Size	120,000 BTUH									140,000 BTUH								
		Uninsulated			3/8-in. Insulation			1/2-in. Insulation			Uninsulated			3/8-in. Insulation			1/2-in. Insulation		
	Pipe Dia. mm	64	76	102	64	76	102	64	76	102	64	76	102	64	76	102	64	76	102
	-7	3.0	15.2	12.2	3.0	22.9	28.9	3.0	22.9	32.0	1.5	16.7	15.2	1.5	19.8	32.0	1.5	19.8	38.1
	-18	3.0	6.1	4.6	3.0	16.8	13.7	3.0	19.8	15.2	1.5	7.6	4.6	1.5	19.8	15.2	1.5	19.8	18.3
	-29	3.0	3.0		3.0	10.7	7.6	3.0	13.7	9.1	1.5	3.0	1.5	1.5	13.7	9.1	1.5	15.2	12.2
	-40	3.0	1.5		3.0	7.6	4.6	3.0	9.1	6.1	1.5	1.5		1.5	9.1	6.1	1.5	35	7.6

* Pipe length (ft) specified for maximum pipe lengths located in unconditioned spaces. Pipes located in unconditioned space cannot exceed total allowable pipe length calculated from Table 2.

† Insulation thickness based on R value of 3.5 per in.

MAXIMUM EQUIVALENT VENT LENGTH - FT. (M)

NOTE: Maximum Equivalent Vent Length (MEVL) includes standard and concentric vent termination and does NOT include elbows. Use Table 3 - Deductions from Maximum Equivalent Vent Length to determine allowable vent length for each application.

Table 2 – Maximum Equivalent Vent Length - Ft.

Unit Size		40,000 [1]			60,000 [2]				80,000					100,000 [3]				120,000		
Altitude (feet)	Pipe Dia. (in)	1 ½	2	2 ½	1 ½	2	2 ½	3	1 ½	2	2 ½	3	4	2	2 ½	3	4	2 ½	3	4
	0 – 2000	40	155	185	20	100	175	200	15	55	130	175	200	20	80	175	200	10	75	185
	2001 – 3000	35	150	175		95	165	185	10	49	125	165	185	15	75	165	185		70	175
	3001 – 4000	30	135	160	16	90	155	175			115	155	175			155	175	5	65	165
	4001 – 4500	25	130	155	15	85	150	170		44	110	150	165	10	70		170	N/A	60	160
	4501 – 5000		125	145		80	145	165				145	160		65	150	165			
	5001 – 6000	20	120	130		75	140	155		41	100	135	150			140	155			155
	6001 – 7000	15	110	120	13	70	130	145	N/A	38	90	125	140		60	135	145		50	140
	7001 – 8000	10	100	110	10	65	120	135		36		120	125	N/A	55	125	135		46	130
	8001 – 9000		90	95	5	60	115	125		33	80	110	115		50	115	125		43	120
	9001 – 10000	5	80	85	N/A	55	105	115		30	75	100	105		45	100	115		39	115
Maximum Equivalent Vent Length – Meters																				
Unit Size		40,000 [1]			60,000 [2]				80,000					100,000 [3]				120,000		
Altitude (meters)	Pipe Dia. (mm)	38	51	64	38	51	64	76	38	51	64	76	102	51	64	76	102	64	76	102
	0 – 610	12.1	47.2	56.3	6.0	30.4	53.3	60.9	4.5	16.7	39.6	53.3	60.9	6.0	24.3	53.3	60.9	3.0	22.8	56.3
	611 – 914	10.6	45.7	53.3		28.9	50.2	56.3	3.0	14.9	38.1	50.2	56.3	4.5	22.8	50.2	56.3		21.3	53.3
	915 – 1219	9.1	41.1	48.7	4.8	27.4	47.2	53.3			35.0	47.2	53.3			47.2	53.3	1.5	19.8	50.2
	1220 – 1370	7.6	39.6	47.2	4.5	25.9	45.7	51.8		13.4	33.5	45.7	50.2	3.0	21.3		51.8	NA	18.2	48.7
	1371 – 1524		38.1	44.1		24.3	44.1	50.2				44.1	48.7		19.8	45.7	50.2			
	1525 – 1829	6.0	36.5	39.6		22.8	42.6	47.2		12.4	30.4	41.1	45.7			42.6	47.2			47.2
	1830 – 2134	4.5	33.5	36.5	3.9	21.3	39.6	44.1	NA	11.5	27.4	38.1	42.6		18.2	41.1	44.1		15.2	42.6
	2135 – 2438	3.0	30.4	33.5	3.0	19.8	36.5	41.1		10.9		36.5	38.1	NA	16.7	38.1	41.1		14.0	39.6
	2439 – 2743		27.4	28.9	1.5	18.2	35.0	38.1		10.0	24.3	33.5	35.0		15.2	35.0	38.1		13.1	36.5
	2744 – 3048	1.5	24.3	25.9	NA	16.7	32.0	35.0		9.1	22.8	30.4	32.0		13.7	30.4	35.0		11.8	35.0

1. Inducer Outlet Restrictor disk (P/N 337683 – 401; 1.25 – in. (32 mm) Dia.) shipped in the loose parts bag or available through Replacement Components required under 10 – ft. (3 M) TEVL in all orientations. Required for installations from 0 – 2000 (0 to 610 M) above sea level. Failure to use an outlet restrictor may result in flame disturbances or flame sense lock – out.
2. Inducer Outlet Restrictor disk (P/N 337683 – 401; 1.25 – in. (32 mm) Dia.) available through Replacement Components required for no greater than 5 – ft. (1.5 M) TEVL in downflow and horizontal orientations only. Required for installations from 0 – 2000 (0 to 610 M) above sea level.
3. Inducer Outlet Restrictor disk (P/N 337683 – 402; 1.50 – in. (38 mm) Dia.) available through Replacement Components required for no greater than 5 – ft. (1.5 M) TEVL in downflow and horizontal orientations only. Required for installations from 0 – 2000 (0 to 610 M) above sea level.

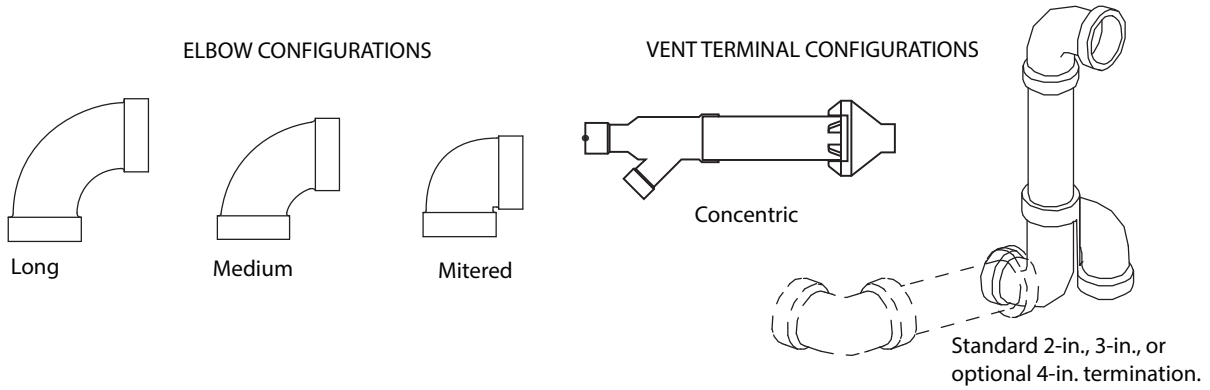

A13110

Table 3 – Deductions from Maximum Equivalent Vent Length - Ft. (M)

Pipe Diameter (in):	1-1/2		2		2-1/2		3		4	
Mitered 90° Elbow	8	(2.4)	8	(2.4)	8	(2.4)	8	(2.4)	8	(2.4)
Medium Radius 90° Elbow	5	(1.5)	5	(1.5)	5	(1.5)	5	(1.5)	5	(1.5)
Long Radius 90° Elbow	3	(0.9)	3	(0.9)	3	(0.9)	3	(0.9)	3	(0.9)
Mitered 45° Elbow	4	(1.2)	4	(1.2)	4	(1.2)	4	(1.2)	4	(1.2)
Medium Radius 45° Elbow	2.5	(0.8)	2.5	(0.8)	2.5	(0.8)	2.5	(0.8)	2.5	(0.8)
Long Radius 45° Elbow	1.5	(0.5)	1.5	(0.5)	1.5	(0.5)	1.5	(0.5)	1.5	(0.5)
Tee	16	(4.9)	16	(4.9)	16	(4.9)	16	(4.9)	16	(4.9)
Concentric Vent Termination	NA		0	(0.0)	NA		0	(0.0)	NA	
Standard Vent Termination	0	(0.0)	0	(0.0)	0	(0.0)	0	(0.0)	0	(0.0)

NOTES:
1. Use only the smallest diameter pipe possible for venting. Over – sizing may cause flame disturbance or excessive vent terminal icing or freeze – up.
2. NA – Not allowed. Pressure switch will not close, or flame disturbance may result.
3. Not all furnace families include 140,000 BTUH input models.
4. Vent sizing for Canadian installations over 4500 ft (1370 M) above sea level are subject to acceptance by local authorities having jurisdiction.
5. Size both the combustion air and vent pipe independently, then use the larger size for both pipes.
6. Assume the two 45° elbows equal one 90° elbow. Wide radius elbows are desirable and may be required in some cases.
7. Elbow and pipe sections within the furnace casing and at the vent termination should not be included in vent length or elbow count.
8. The minimum pipe length is 5 ft. (2 M) linear feet (meters) for all applications.
9. Use 3 – in. (76 mm) diameter vent termination kit for installations requiring 4 – in. (102 mm) diameter pipe.

Venting System Length Calculations

The Total Equivalent Vent Length (TEVL) for **EACH** combustion air or vent pipe equals the length of the venting system, plus the equivalent length of elbows used in the venting system from Table **3**.

Standard vent terminations or factory accessory concentric vent terminations count for zero deduction.

See vent system manufacturer's data for equivalent lengths of flexible vent pipe or other termination systems. **DO NOT ASSUME** that one foot of flexible vent pipe equals one foot of straight PVC/ABS DWV vent pipe.

Compare the Total Equivalent Vent Length to the Maximum Equivalent Vent Lengths in Table 2.

Example 1

A direct-vent 60,000 BTUH furnace installed at 2100 ft. (640M). Venting system includes **FOR EACH PIPE:**
70 feet (22 M) of vent pipe, 65 feet (20 M) of combustion air inlet pipe, (3) 90º long-radius elbows, (2) 45º long-radius elbows, and a factory accessory concentric vent kit.

Can this application use 2" (50 mm ND) PVC/ABS DWV vent piping?

Measure the required linear length of air inlet and vent pipe; insert the longest of the two here					70 ft. (22 M)	Use length of the longer of the vent or air inlet piping system
Add equiv length of (3) 90º long-radius elbows (use the highest number of elbows for either the vent or inlet pipe)	3	x	3 ft. (0.9 M)	=	9 ft. (2.7 M)	From Table 3.
Add equiv length of (2) 45º long-radius elbows (use the highest number of elbows for either the vent or inlet pipe)	2	x	1.5 ft. (0.5 M)	=	3 ft. (0.9 M)	From Table 3.
Add equiv length of factory concentric vent term					0 ft.	From Table 3.
Add correction for flexible vent pipe, if any					0 ft.	From Vent Manufacturer's instructions; zero for PVC/ABS DWV
Total Equivalent Vent Length (TEVL)					82 ft. (25 M)	Add all of the above lines
Maximum Equivalent Vent Length (MEVL)					95 ft. (29 M)	For 2" pipe from Table 2
Is TEVL less than MEVL?					**YES**	**Therefore, 2" pipe MAY be used**

Example 2

A direct-vent 60,000 BTUH furnace installed at 2100 ft. (640M). Venting system includes **FOR EACH PIPE:**
100 feet (30 M) of vent pipe, 95 feet (29 M) of combustion air inlet pipe, (3) 90º long-radius elbows, and a polypropylene concentric vent kit. Also includes 20 feet (6.1 M) of flexible polypropylene vent pipe, included within the 100 feet (30 M) of vent pipe.

VERIFY FROM POLYPROPYLENE VENT MANUFACTURER'S INSTRUCTIONS for the multiplier correction for flexible vent pipe.

Can this application use 60mm o.d. (2") polypropylene vent piping? If not, what size piping can be used?

Measure the required linear length of **RIGID** air inlet and vent pipe; insert the longest of the two here: 100 ft. Of rigid pipe – 20 ft. Of flexible pipe				=	80 ft. (24 M)	Use length of the longer of the vent or air inlet piping system
Add equiv length of (3) 90º long-radius elbows (use the highest number of elbows for either the vent or inlet pipe)	3	x	5 ft. (1.5 M)	=	15 ft. (4.6 M)	Example from polypropylene vent manufacturer's instructions, Verify from vent manufacturer's instructions.
Add equiv length of 45º long-radius elbows (use the highest number of elbows for either the vent or inlet pipe)	0	x		=	0 ft. (0 M)	
Add equiv length of factory concentric vent term	9	x	3.3 ft (0.9 M)	=	30 ft. (9 M)	
Add correction for flexible vent pipe, if any	2*	x	20 ft. (6.1 M)	=	40 ft. (12.2 M)	
* VERIFY FROM VENT MANUFACTURER'S INSTRUCTIONS; For example only, assume 1 meter of flexible 60mm (2") or 80mm (3") polypropylene pipe equals 2.0 meters (6.5 ft.) of PVC/ABS pipe.						
Total Equivalent Vent Length (TEVL)					165 ft. (50 M)	Add all of the above lines
Maximum Equivalent Vent Length (MEVL)					95 ft. (29 M)	For 2" pipe from Table 2
Is TEVL less than MEVL?					**NO**	**Therefore, 60mm (2") pipe may NOT be used; try 80mm (3")**
Maximum Equivalent Vent Length (MEVL)					185 ft. (57 M)	For 3" pipe from Table 2
Is TEVL less than MEVL?					**YES**	**Therefore, 80mm (3") pipe MAY be used**

RETURN AIR TEMPERATURE

This furnace is designed for continuous return-air minimum temperature of 60°F (15°C) db or intermittent operation down to 55°F (13°C) db such as when used with a night setback thermometer. Return-air temperature must not exceed 80°F (27°C) db. Failure to follow these return air limits may affect reliability of heat exchangers, motors and controls.

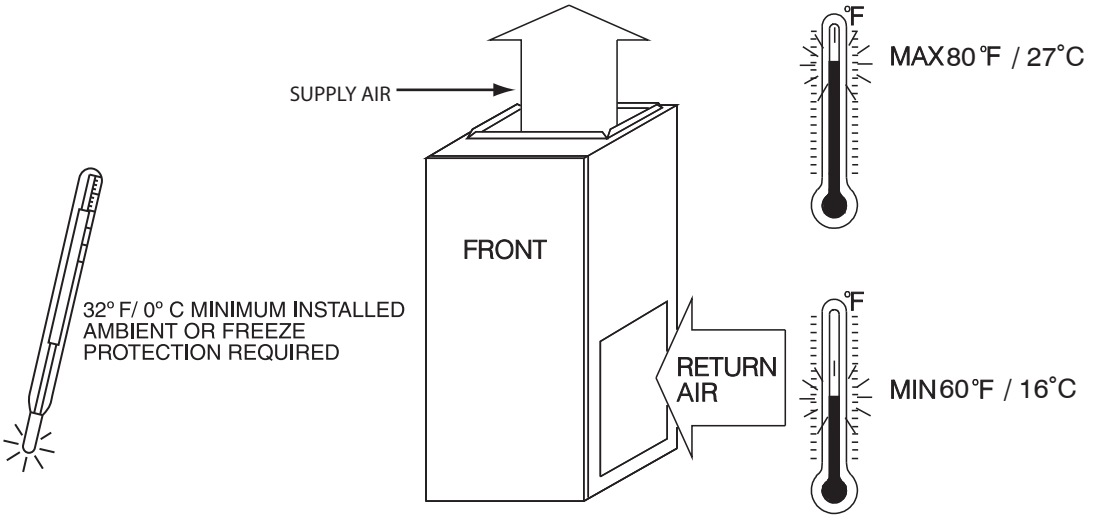

A10490

MINIMUM CLEARANCES TO COMBUSTIBLE MATERIALS

POSITION	CLEARANCE
Rear	0 (0 mm)
Front (Combustion air openings in furnace and in structure)	1 in. (25 mm)
Required for service**	24 in. (610 mm)*
All Sides of Supply Plenum**	1 in. (25 mm)
Sides	0 (0 mm)
Vent	0 (0 mm)
Top of Furnace	1 in. (25 mm)

* Recommended

**Consult your local building codes

COMBUSTION-AIR PIPE FOR NON-DIRECT (1-PIPE) VENT APPLICATION

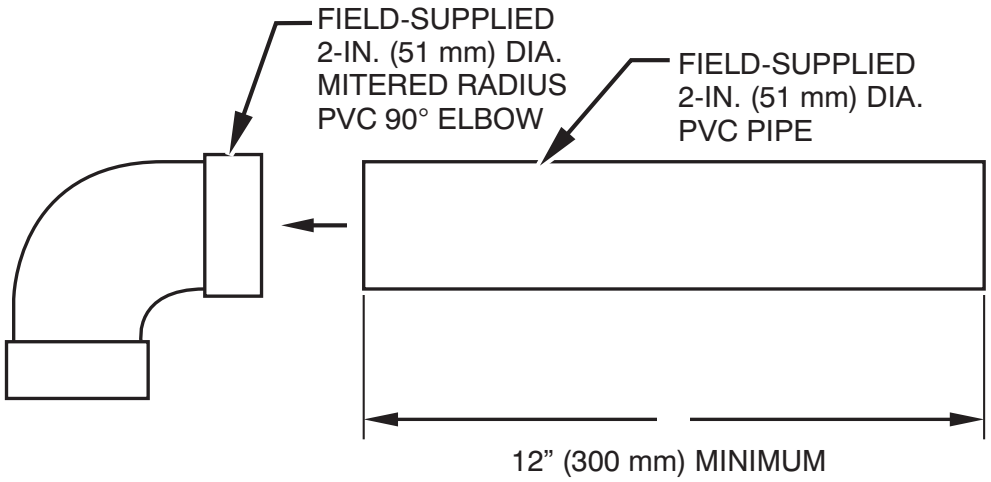

A12376

NOTE: See Installation Instructions for specific venting configurations.

DOWNFLOW SUBBASE

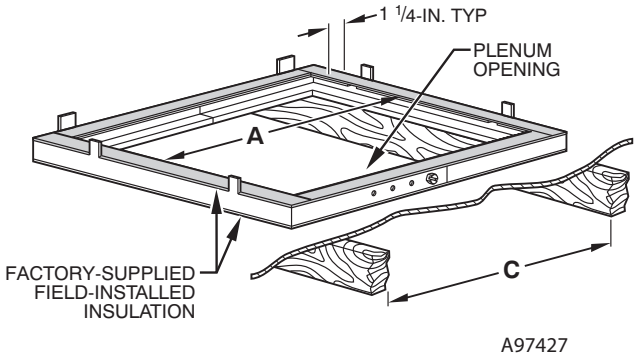

Assembled

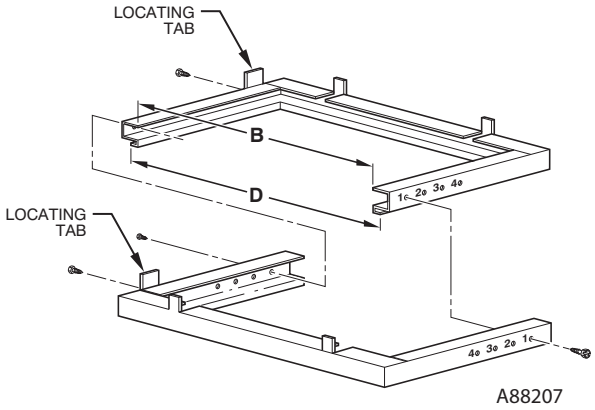

Disassembled

DIMENSIONS (IN. / MM)						
FURNACE CASING WIDTH	FURNACE IN DOWNFLOW APPLICATION	PLENUM OPENING*		FLOOR OPENING		HOLE NO. FOR WIDTH ADJUSTMENT
		A	B	C	D	
14–3/16 (360)	Furnace with or without Cased Coil Assembly or Coil Box	11–3/16 (322)	19 (483)	13–7/16 (341)	20–5/8 (600)	4
17–1/2 (445)	Furnace with or without Cased Coil Assembly or Coil Box	15–1/8 (384)	19 (483)	16–3/4 (426)	20–5/8 (600)	3
21 (533)	Furnace with or without Cased Coil Assembly or Coil Box	18–5/8 (396)	19 (483)	20–1/4 (514)	20–5/8 (600)	2
24–1/2 (622)	Furnace with or without Cased Coil Assembly or Coil Box	22–1/8 (562)	19 (483)	23–3/4 (603)	20–5/8 (600)	1

*The plenum should be constructed 1/4–in. (6 mm) smaller in width and depth than the plenum dimensions shown above.

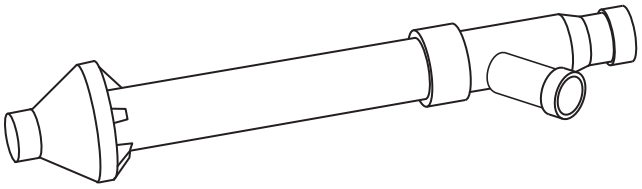

Concentric Vent Kit

A93086

A concentric vent kit allows vent and combustion-air pipes to terminate through a single exit in a roof or side wall. One pipe runs inside the other allowing venting through the inner pipe and combustion air to be drawn in through the outer pipe.

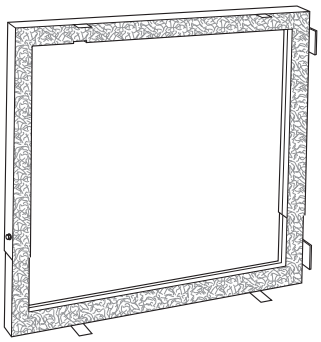

Downflow Subbase

A88202

One base fits all furnace sizes. The base is designed to be installed between the furnace and a combustible floor when no coil box is used or when a coil box other than a Carrier cased coil is used. It is CSA design certified for use with Carrier branded furnaces when installed in downflow applications.

MEDIA FILTER CABINET (OPTIONAL ACCESSORY)

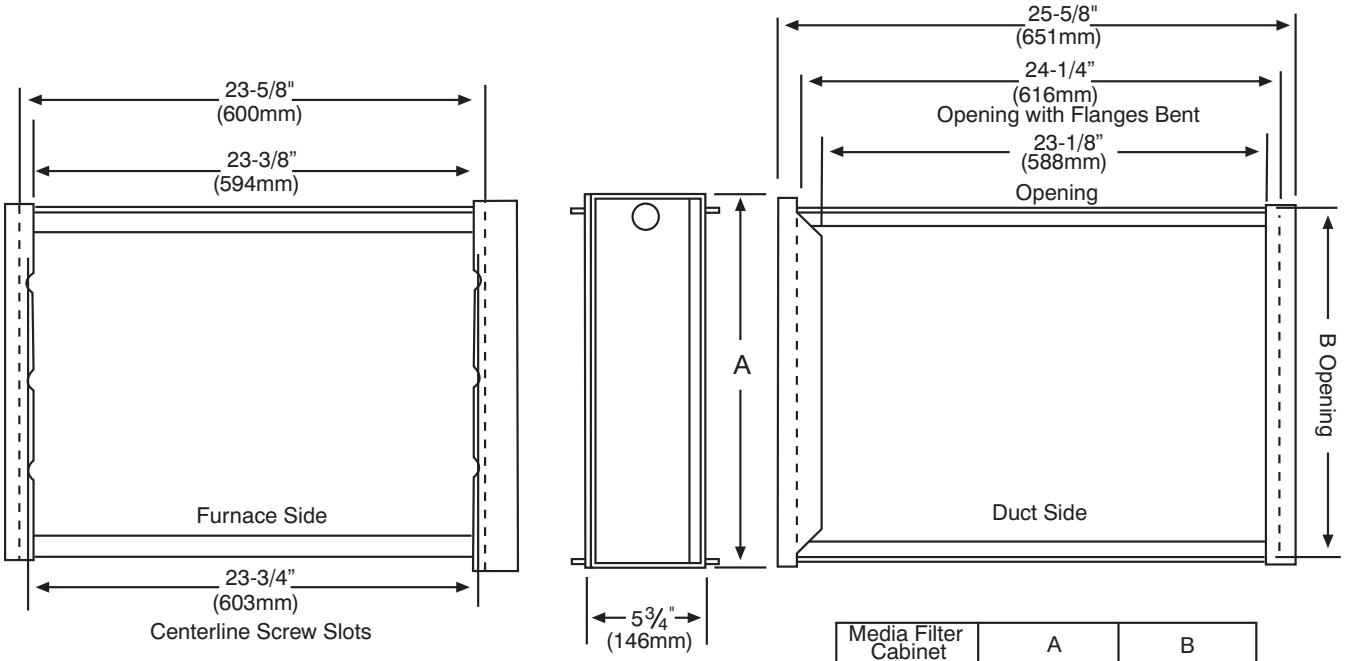

Media Filter Cabinet	A	B
16" (406mm)	17" (432mm)	16" (406mm)
20" (508mm)	21" (533mm)	20" (508mm)
24" (610mm)	25" (635mm)	24" (610mm)

NOTE: Media cabinet is matched to the bottom opening on furnace. May also be used for side return.

A12428

TYPICAL WIRING SCHEMATIC

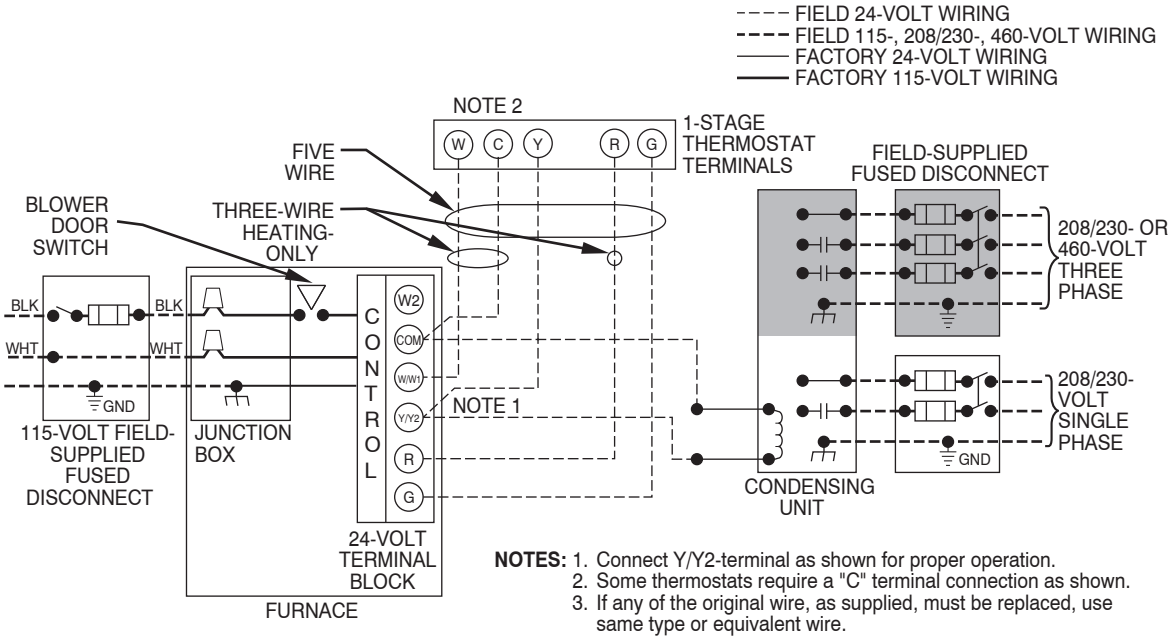

A11401

DIMENSIONAL DRAWING

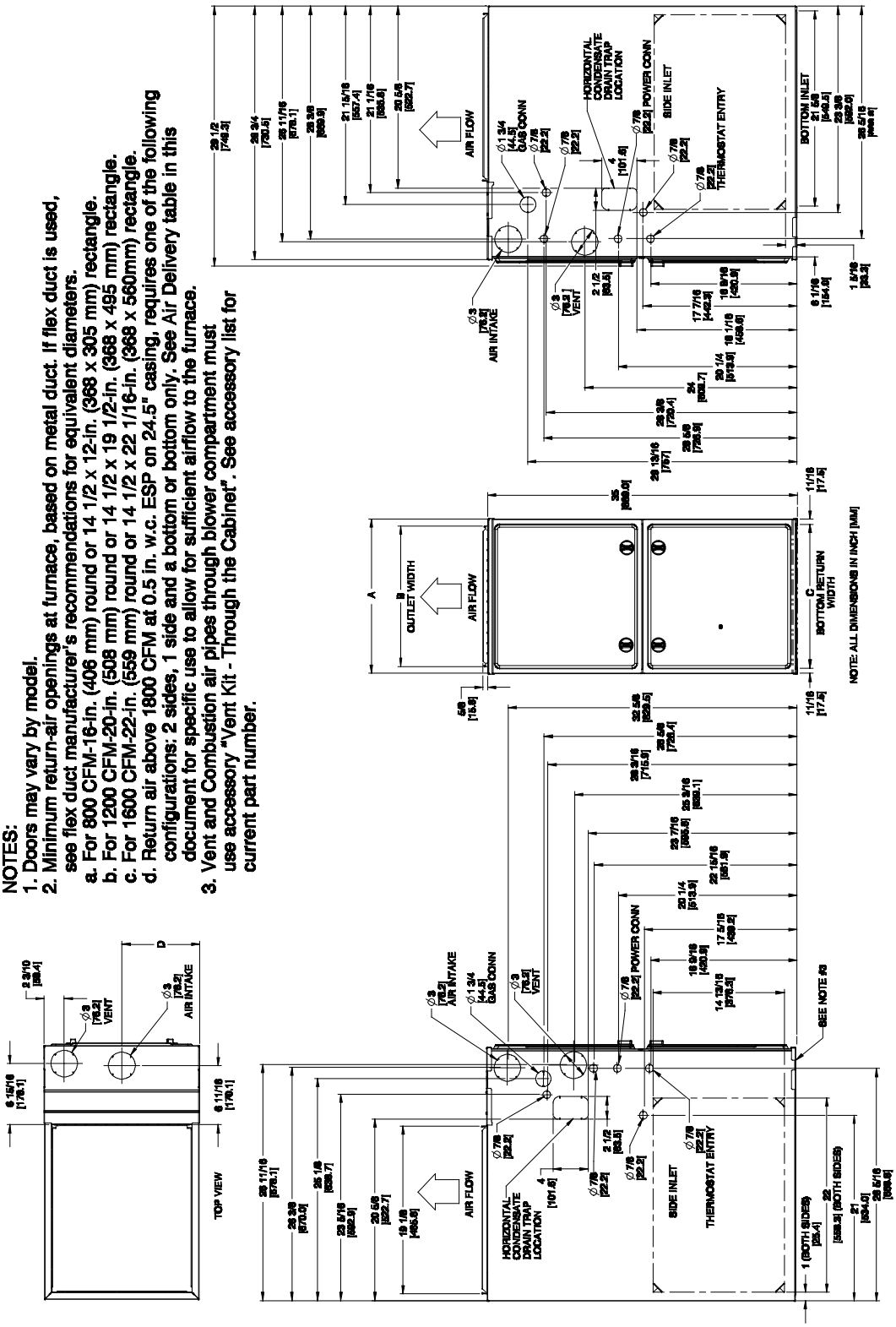

A180203

FURNACE SIZE	A CABINET WIDTH	B OUTLET WIDTH	C BOTTOM INLET WIDTH	D AIR INTAKE	SHIP WT. LB (KG)
040V14–10	14–3/16 (361)	12–1/2 (319)	12–9/16 (322)	7–1/8 (181)	123 (55.8)
040V17–12	17–1/2 (445)	15–7/8 (403)	16 (406)	8–3/4 (222)	133 (60.3)
060V14–12	14–3/16 (361)	12–1/2 (319)	12–9/16 (322)	7–1/8 (181)	132 (59.9)
060V17–14	17–1/2 (445)	15–7/8 (403)	16 (406)	8–3/4 (222)	139 (63.0)
080V17–16	17–1/2 (445)	15–7/8 (403)	16 (406)	8–3/4 (222)	147 (66.7)
080V21–20	21 (533)	19–3/8 (492)	19–1/2 (495)	10–1/2 (267)	156 (70.7)
100V21–20	21 (533)	19–3/8 (492)	19–1/2 (495)	10–1/2 (267)	170 (77.1)
120V24–22	24–1/2 (622)	22–7/8 (581)	23 (584)	12–1/4 (311)	190 (86.2)

GUIDE SPECIFICATIONS

General

System Description

Furnish a _____ 4-way multipoise gas-fired condensing furnace for use with natural gas or propane (factory-authorized conversion kit required for propane).

Quality Assurance

Unit will be designed, tested and constructed to the current ANSI Z 21.47/CSA 2.3 design standard for gas-fired central furnaces.

Unit will be third party certified by CSA to the current ANSI Z 21.47/CSA 2.3 design standard for gas-fired central furnaces. Unit will carry the CSA Blue Star® and Blue Flame® labels. Unit efficiency testing will be performed per the current DOE test procedure as listed in the Federal Register.

Unit will be certified for capacity and efficiency and listed in the latest AHRI Consumer's Directory of Certified Efficiency Ratings.

Unit will carry the current Federal Trade Commission Energy Guide efficiency label.

Delivery, Storage, and Handling

Unit will be shipped as single package only and is stored and handled per unit manufacturer's recommendations.

Primary Heat Exchangers

Primary heat exchangers shall be 3-Pass corrosion-resistant aluminized steel of fold-and-crimp sectional design and applied operating under negative pressure.

Secondary Heat Exchangers

Secondary heat exchangers shall be of a stainless steel flow-through of fin-and-tube design and applied operating under negative pressure.

Controls

Controls shall include a micro-processor-based integrated electronic control board with at least 16 service troubleshooting codes displayed via diagnostic flashing LED light on the control, a self-test feature that checks all major functions of the furnace, and a replaceable automotive-type circuit protection fuse. Multiple operational settings available, including separate blower speeds for low heat, high heat, low cooling, high cooling and continuous fan. Continuous fan speed may be adjusted from the thermostat. Cooling airflow will be selectable between 325 to 400 CFM per ton of air conditioning. Features will also include temporary reduced airflow in the cooling mode for improved dehumidification when a T6-PRH is selected as the thermostat.

Operating Characteristics

Heating capacity shall be _____ Btuh input; _____ Btuh output capacity.

Fuel Gas Efficiency shall be_____ AFUE.

Air delivery shall be _____ cfm minimum at 0.50 in. W.C. external static pressure.

Dimensions shall be: depth_____in. (mm); width _____in. (mm); height_____in. (mm) (casing only). Height shall be _____in. (mm) with A/C coil and _____in. (mm) overall with plenum.

Electrical Requirements

Electrical supply shall be 115 volts, 60 Hz, single-phase (nominal). Minimum wire size shall be _____AWG; maximum fuse size of HACR-type designated circuit breaker shall be _____ amps.

Special Features

Refer to section of the product data identifying accessories and descriptions for specific features and available enhancements.

Warranty (for inclusion by specifying engineer)

U.S. and Canada only. Warranty certificate available upon request.

Equipment

Blower Wheel and ECM Blower Motor

Galvanized blower wheel shall be centrifugal type, statically and dynamically balanced. Blower motor of ECM type shall be permanently lubricated with sealed ball bearings, of _____hp, and have infinitely variable speed from 600-1200 RPM operating only when motor inputs are provided. Blower motor shall be direct drive and soft mounted to the blower housing to reduce vibration transmission.

Filters

Furnace shall have reusable-type filters. Filter shall be _____ in. (mm) X _____ in. (mm). An accessory highly efficient Media Filter is available as an option. _____ Media Filter.

Casing

Casing shall be of .030 in. thickness minimum, pre-painted steel.

Draft Inducer Motor

Draft inducer motor shall be two-speed PSC design.

Copyright 2019 Carrier Corp. • 7310 W. Morris St. • Indianapolis, IN 46231
. Edition Date: 05/19

Catalog No: 59TP6B–01PD

Manufacturer reserves the right to change, at any time, specifications and designs without notice and without obligations.

Replaces: NEW