50TC
50 Hz
Packaged Rooftop Electric Cooling Units
18.17 to 42.5 kW
5 to 12.5 Nominal Tons

Carrier
turn to the experts

Product Data

WeatherMaker®

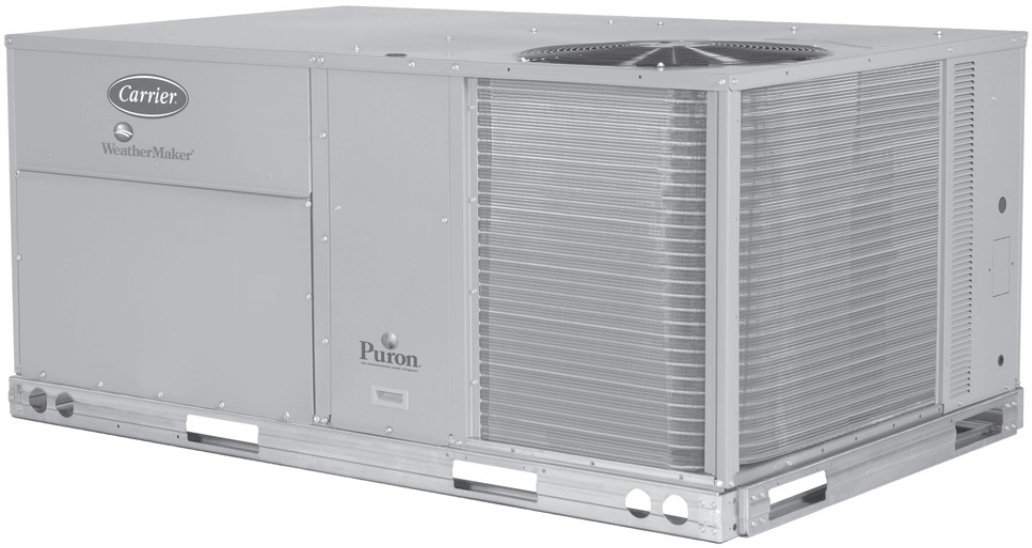

C08613

UL C US

Certified System
ISO 9001
QMI-SAI Global

Puron
the environmentally sound refrigerant

ASHRAE 90.1 COMPLIANT

TABLE OF CONTENTS

	PAGE		PAGE
FEATURES AND BENEFITS	3	COOLING CAPACITIES	27
MODEL NUMBER NOMENCLATURE	4	STATIC PRESSURE TABLES	39
FACTORY OPTIONS & ACCESSORIES	6	FAN PERFORMANCE	41
AHRI CAPACITY RATING	7	ELECTRICAL INFO	56
SOUND PERFORMANCE	7	MCA / MOCP	57
PHYSICAL DATA	8	WIRING DIAGRAMS	59
CURBS AND WEIGHTS	13	GUIDE SPECIFICATIONS	64
APPLICATION DATA	26		

Carrier®

Turn to the Experts℠

The 50TC-*07-16 WeatherMaker Carrier rooftop unit (RTU) was designed by customers for customers. With no-strip screw collars, handled access panels, and more we've made your unit easy to install, easy to maintain and easy to use.

Easy to install:

All WeatherMaker™ units are field-convertible to horizontal air flow; no special adapter curbs or kits are necessary. Convertible airflow design makes it easy to adjust to unexpected job-site complications. Lighter units make easy replacement. These Carrier 50TC rooftops fit on existing Carrier curbs dating back to 1989. Also, our large control box gives you room to work and room to mount Carrier accessory controls.

Easy to maintain:

Easy access handles by Carrier provide quick and easy access to all normally serviced components. Our "no-strip" screw system has superior holding power and guides screws into position while preventing the screw from stripping the unit's metal. Take accurate pressure readings by reading condenser pressure with panels on. Simply remove the black, composite plug, route your gauge line(s) through the hole, and connect them to the refrigeration service valve(s). Now, you can take refrigeration system pressure readings without affecting the condenser airflow.

Easy to use:

The newly designed, master terminal board by Carrier puts all your connections and troubleshooting points in one convenient place, standard. Most low voltage connections are made to the same board and make it easy to find what you're looking for and easy to access it. Carrier rooftops have high and low pressure switches, a filter drier, and 51mm (2-in.) filters standard.

FEATURES AND BENEFITS

- Up to 28% lighter than similar industry units. Lighter rooftops make easier replacement jobs.
- Single-stage cooling capacity control on all 07 models.
- Two-stage cooling capacity control on 08-16 models
- These 50TC units fit on existing Carrier rooftop curbs making the utility connections the same. This saves time and money on replacement jobs.
- Standardized components and layout. Standardized components and controls make service and stocking parts easier.
- Scroll compressors on all units. This makes service, stocking parts, replacement, and trouble-shooting easier.
- Field convertible airflow, 18.17 kW - 34.0 kW (5 - 10 tons). Being able to convert a unit from vertical airflow to horizontal makes it easy to overcome job site complications. 42.5 kW (12.5 ton) models require a simple supply duct cover to field convert from factory vertical to horizontal.
- Easy-adjust, belt-drive motor available. There's no need for field-supplied drives or motors.
- Provisions for bottom or side condensate drain.
- Capable of thru-the-base or thru-the-curb electrical routing.
- Single-point electrical connection.
- Sloped, composite drain pan. Sloped, composite drain pan sheds water; and won't rust.
- Standardized controls and control box layout. Standardized components and controls make stocking parts and service easier.
- Clean, large, easy to use control box.
- Color-coded wiring.
- Large, laminated wiring and power wiring drawings which are affixed to unit make troubleshooting easy.
- Single, central terminal board for test and wiring connections.
- Fast-access, handled, panels for easy access to the blower and blower motor, control box, and compressors.
- "No-strip" screw system guides screws into the panel and captures them tightly without stripping the screw, the panel, or the unit.
- Standard mechanical cooling up to 52°C (125°F) or with winter start kit down to -4°C (25°F).
- 51mm (2-in.) disposable filters on all units.
- Refrigerant filter-drier on each circuit.
- High and low pressure switches. Added reliability with high pressure switch and low pressure switch.

Puron™
the environmentally sound refrigerant

Carrier® Comfort System
PremierLink™

MODEL NUMBER NOMENCLATURE

1	2	3	4	5	6	7	8	9	10	11	12	13	14	15	16	17	18
5	0	T	C	–	D	0	8	A	1	A	9	–	0	A	0	A	0

Unit Heat Type
50 = Electric Heat Pkg Rooftop

Tier / Model
TC = High Efficiency WeatherMaker Series

Heat Size
– = None (Field–installed Accessory)

Refrig. System Options
A = Single–stage cooling model (A07)
D = Two–stage cooling model (D08–D14)

Cooling kW (Tons)
07 = 18.17 kW (5.1)
08 = 21.48 kW (6.1)
09 = 23.94 kW (6.8)
12 = 30.01 kW (8.5)
14 = 34.0 kW (10)
16 = 42.5 (12.5)

Sensor Options
A = None
B = RA Smoke Detector
C = SA Smoke Detector
D = RA & SA Smoke Detector
E = CO_2
F = RA Smoke Detector & CO_2
G = SA Smoke Detector & CO_2
H = RA & SA Smoke Detector & CO_2

Indoor Fan Options
1 = Standard Static Option
2 = Medium Static Option
3 = High Static Option

Coil Options (Outdoor – Indoor – Hail Guard)
A = Al/Cu – Al/Cu
B = Precoat Al/Cu – Al/Cu
C = E coat Al/Cu – Al/Cu
D = E coat Al/Cu – E coat Al/Cu
E = Cu/Cu – Al/Cu
F = Cu/Cu – Cu/Cu
M = Al/Cu – Al/Cu – Louvered Hail Guards
N = Precoat Al/Cu – Al/Cu – Louvered Hail Guards
P = E coat Al/Cu – Al/Cu – Louvered Hail Guards
Q = E coat Al/Cu – E coat Al/Cu – Louvered Hail Guards
R = Cu/Cu – Al/Cu – Louvered Hail Guards
S = Cu/Cu – Cu/Cu – Louvered Hail Guards

Voltage
9 = 400/3/50

Design Revision
– = Factory assigned

Base Unit Controls
0 = Electromechanical controller
1 = PremierLink DDC controller
2 = RTU Open Multi–Protocol controller

Air Intake / Exhaust Options
A = None
B = Temp econo w/ baro relief
F = Enthalpy econo w/ baro relief
K = 2 position damper

Future Use
0 = Standard

Electrical Options
A = None
C = Non–fused Disconnect
D = Thru–the–base Connectors
F = Non–fused Disconnect & Thru–the–base Connectors

Brand / Packaging
0 = Standard

Table 1 – FACTORY-INSTALLED OPTIONS AND FIELD-INSTALLED ACCESSORIES

CATEGORY	ITEM	FACTORY INSTALLED OPTION	FIELD INSTALLED ACCESSORY
Cabinet	Thru–the–base electrical connections	X	X
Coil Options	Cu/Cu indoor and/or outdoor coils	X	
	Pre–coated outdoor coils	X	
	Premium, E–coated outdoor coils	X	
Condenser Protection	Condenser coil hail guard (louvered design)	X	X
Controls	Thermostats, temperature sensors, and subbases		X
	PremierLink DDC communicating controller	X	X
	RTU Open–protocol controller	X	
	Smoke detector (supply and/or return air)	X	
	Time Guard II compressor delay control circuit		X
	Phase Monitor		X
Economizers & Outdoor Air Dampers	EconoMi$er IV (for electro–mechanical controlled RTUs)	X	X
	EconoMi$er2 (for DDC controlled RTUs)	X	X
	Motorized 2 position outdoor–air damper	X	X
	Manual outdoor–air damper (25% and 50%)		X
	Barometric relief[1]	X	X
	Power exhaust		X
Economizer Sensors & IAQ Devices	Single dry bulb temperature sensors[2]	X	X
	Differential dry bulb temperature sensors[2]		X
	Single enthalpy sensors[2]	X	X
	Differential enthalpy sensors[2]		X
	CO_2 sensor (wall, duct, or unit mounted)[2]	X	X
Electric Heat	Electric Resistance Heaters		X
	Single Point Kit		X
Indoor Motor & Drive	Multiple motor and drive packages	X	
Low Ambient Control	Winter start kit[3]		X
	Motormaster® head pressure controller[3]		X
Power Options	Non–fused disconnect	X	
Roof Curbs	Roof curb 356mm (14–in.)		X
	Roof curb 610mm (24–in.)		X

NOTES:
1. Included with economizer.
2. Sensors for optimizing economizer.
3. See application data for assistance.

FACTORY OPTIONS AND/OR ACCESSORIES

Economizer (dry-bulb or enthalpy)

Economizers save money. They bring in fresh, outside air for ventilation; and provide cool, outside air to cool your building. This is the preferred method of low-ambient cooling. When coupled to CO_2 sensors, Economizers can provide even more savings by coupling the ventilation air to only that amount required.

Economizers are available, installed and tested by the factory, with either enthalpy or dry-bulb temperature inputs. There are also models for electromechanical as well as direct digital controllers. Additional sensors are available as accessories to optimize the economizers.

Economizers include gravity controlled, barometric relief equalizes building pressure and ambient air pressures. This can be a cast effective solution to prevent building pressurization.

CO_2 Sensor

Improves productivity and saves money by working with the economizer to intake only the correct amount of outside air for ventilation. As occupants fill your building, the CO_2 sensor detects their presence through increasing CO_2 levels, and opens the economizer appropriately.

When the occupants leave, the CO_2 levels decrease, and the sensor appropriately closes the economizer. This intelligent control of the ventilation air, called Demand Control Ventilation (DCV) reduces the overall load on the rooftop, saving money.

Smoke Detectors

Trust the experts. Smoke detectors make your application safer and your job easier. Carrier smoke detectors immediately shut down the rooftop unit when smoke is detected. They are available, installed by the factory, for supply air, return air, or both.

Louvered Hail Guards

Sleek, louvered panels protect the condenser coil from hail damage, foreign objects, and incidental contact.

Non-fused Disconnect

This OSHA-compliant, factory-installed, safety switch allows a service technician to locally secure power to the rooftop.

Power Exhaust with Barometric Relief.

Superior internal building pressure control. This field-installed accessory may eliminate the need for costly, external pressure control fans.

PremierLink™

This CCN controller regulates your rooftop's performance to tighter tolerances and expanded limits, as well as facilitates zoning systems and digital accessories. It also unites your Carrier HVAC equipment together on one, coherent CCN network. The PremierLink can be factory-installed, or easily field-installed.

RTU Open Multi-protocol Controller

Connect the rooftop to an existing BAS without needing complicated translators or adapter modules using the RTU Open controller. This new controller speaks the 4 most common building automation system languages (Bacnet, Modbus, N2, and Lonworks). Use this controller when you have an existing BAS.

Time Guard II Control Circuit

This accessory protects your compressor by preventing short-cycling in the event of some other failure, prevents the compressor from restarting for 30 seconds after stopping. Not required with PremierLink®, RTU Open, or authorized commercial thermostats.

Filter or Fan Status Switches

Use these differential pressure switches to detect a filter clog or indoor fan motor failure. When used in conjunction with a compatible unit controller/thermostat, the switches will activate an alarm to warn the appropriate personnel.

Motorized 2-Position Damper

The new Carrier 2-position, motorized outdoor air damper admits up to 100% outside air. Using reliable, gear-driven technology, the 2-position damper opens to allow ventilation air and closes when the rooftop stops, stopping unwanted infiltration.

Manual OA Damper

Manual outdoor air dampers are an economical way to bring in ventilation air. The dampers are available in 25% and 50% versions.

Motormaster Head Pressure Controller

The Motormaster motor controller is a low ambient, head pressure controller kit that is designed to maintain the unit's condenser head pressure during periods of low ambient cooling operation. This device should be used as an alternative to economizer free cooling not when economizer usage is either not appropriate or desired. The Motormaster will either cycle the outdoor-fan motors or operate them at reduced speed to maintain the unit operation, depending on the model.

FACTORY OPTIONS AND/OR ACCESSORIES (cont.)

Winter Start Kit

The winter start kit by Carrier extends the low ambient limit of your rooftop to -4°C (25°F). The kit bypasses the low pressure switch, preventing nuisance tripping of the low pressure switch. Other low ambient precautions may still be prudent.

Alternate Motors and Drives

Some applications need larger horsepower motors, some need more airflow, and some need both. Regardless of the case, your Carrier expert has a factory installed combination to meet your application. A wide selection of motors and pulleys (drives) are available, factory installed, to handle nearly any application.

Thru-the-Base Connections

Thru-the-base connections, available as either an accessory or as a factory option, are necessary to ensure proper connection and seal when routing wire and piping through the rooftop's basepan and curb. These couplings eliminate roof penetration and should be considered for gas lines, main power lines, as well as control power.

Electric Heaters

Carrier offers a full-line of field-installed accessory heaters. The heaters are very easy to use, install and are all pre-engineered and certified.

Table 2 – AHRI COOLING RATING TABLES

UNIT	COOLING STAGES	NET CAPACITY		EER	IPLV	NOMINAL AIRFLOW	
		kW	Btuh			L/s	CFM
A07	1	18.17	62,000	11.75	N/A	708	1500
D08	2	21.48	73,300	12.30	13.4	849	1800
D09	2	23.94	81,700	12.00	13.3	1062	2250
D12	2	30.01	102,400	12.10	13.8	1416	3000
D14	2	33.98	116,000	11.12	11.7	1416	3000
D16	2	42.49	145,000	11.00	11.5	2360	5000

LEGEND

AHRI – Air Conditioning, Heating and Refrigeration Institute
ASHRAE – American Society of Heating, Refrigerating and Air Conditioning, Inc.
EER – Energy Efficiency Ratio
SEER – Seasonal Energy Efficiency Ratio
IPLV – Integrated Part Load Value

NOTES

1. Tested in accordance with AHRI Standard 340/360, as appropriate.
2. Ratings are based on:
   Cooling Standard: 27°C (80°F) db, 19°C (67°F) wb indoor air temp and 35°C (95°F) db outdoor air temp.
   IPLV Standard: 27°C (80°F) db, 19°C (67°F) wb indoor air temp and 27°C (80°F) db outdoor air temp.
3. All 50TC units comply with ASHRAE 90.1 Energy Standard for minimum SEER and EER requirements.

Table 3 – MINIMUM - MAXIMUM AIRFLOWS ELECTRIC HEAT

UNIT	COOLING		ELECTRIC HEATERS	
	MINIMUM	MAXIMUM	MINIMUM	MAXIMUM
50TC–A07	1500	2500	1500	2500
50TC–D08	1800	3000	1800	3000
50TC–D09	2100	3500	2250	3500
50TC–D12	2250	3750	3000	3750
50TC–D14	3000	5000	3000	5000
50TC–D16	4500	7500	4500	7500

Table 4 – SOUND PERFORMANCE TABLE

UNIT	COOLING STAGES	OUTDOOR SOUND (DBA) @ 50HZ
A07	1	78
D08	2	82
D09	2	82
D12	2	82
D14	2	83
D16	2	87

LEGEND

dB – Decibel

NOTES:

1. Outdoor sound data is measure in accordance with AHRI standard 270–2008.
2. Measurements are expressed in terms of sound power. Do not compare these values to sound pressure values because sound pressure accounts for specific environmental factors which do not match individual applications. Sound power values are independent of the environment and therefore more accurate.
3. A–weighted sound ratings filter out very high and very low frequencies, to better approximate the response of an “average” human ear. A–weighted measurements for Carrier units are taken in accordance with 270–2008.

Table 5 – PHYSICAL DATA (COOLING) SI

	50TC–A07	50TC–D08	50TC–D09	50TC–D12	50TC–D14	50TC–D16
Refrigeration System						
# Circuits / # Comp. / Type	1 / 1 / Scroll	2 / 2 / Scroll	2 / 2 / Scroll	2 / 2 / Scroll	2 / 2 / Scroll	2 / 2 / Scroll
R–410A charge A/B (kg)	5.8	3.1 / 3.1	4.2 / 4.2	4.0 / 4.1	5.7 / 5.8	7.2 / 7.6
Metering device	Acutrol	Acutrol	Acutrol	Acutrol	Acutrol	Acutrol
High–press. Trip / Reset (kPa)	4344 / 3482	4344 / 3482	4344 / 3482	4344 / 3482	4344 / 3482	4344 / 3482
Low–press. Trip / Reset (kPa)	372 / 807	372 / 807	372 / 807	372 / 807	372 / 807	372 / 807
Evap. Coil						
Material – Tube/Fin	Cu / Al	Cu / Al	Cu / Al	Cu / Al	Cu / Al	Cu / Al
Coil type	10mm RTPF	10mm RTPF	10mm RTPF	10mm RTPF	10mm RTPF	10mm RTPF
Rows / Fins Per Meter	4 / 591	3 / 591	3 / 591	4 / 591	4 / 591	3 / 591
Total face area (m^2)	.68	.83	1.0	1.0	1.0	1.6
Condensate drain conn. size	19mm	19mm	19mm	19mm	19mm	19mm
Evap. fan and motor						
Standard Static – Motor Qty / Drive type	1 / Belt	1 / Belt	1 / Belt	1 / Belt	1 / Belt	1 / Belt
Standard Static – Max BHP	1.1	1.1	1.1	1.5	1.8	2.1
Standard Static – r/s range	14 – 20	7 – 11	7 – 11	7 – 11	11 – 14	8– 10
Standard Static – Motor frame size	56	56	56	56	56	56Y
Standard Static – Fan Qty / Type	1 / Centrifugal	1 / Centrifugal	1 / Centrifugal	1 / Centrifugal	1 / Centrifugal	1 / Centrifugal
Standard Static – Fan Diameter (mm)	254 x 254	381 x 381	381 x 381	381 x 381	381 x 381	457 x 457
Medium Static – Motor Qty / Drive type	N/A	1 / Belt	1 / Belt	1 / Belt	1 / Belt	1 / Belt
Medium Static – Max BHP	N/A	1.8	1.5	2.3	2.3	2.7
Medium Static – r/s range	N/A	11 – 15	11 – 15	11 – 15	11 – 15	9 – 12
Medium Static – Motor frame size	N/A	56	56	56	56	56HZ
Medium Static – Fan Qty / Type	N/A	1 / Centrifugal	1 / Centrifugal	1 / Centrifugal	1 / Centrifugal	1 / Centrifugal
Medium Static – Fan Diameter (mm)	N/A	381 x 381	381 x 381	381 x 381	381 x 381	457 x 457
High Static – Motor Qty / Drive type	1 / Belt	1 / Belt	1 / Belt	1 / Belt	1 / Belt	1 / Belt
High Static – Max BHP	1.8	2.9	2.3	2.9	2.9	4.5
High Static – r/s range	20 – 26	20 – 19	20 – 19	20 – 19	20 – 19	20 – 14
High Static – Motor frame size	56	56	56	56	56	S184T
High Static – Fan Qty / Type	1 / Centrifugal	1 / Centrifugal	1 / Centrifugal	1 / Centrifugal	1 / Centrifugal	1 / Centrifugal
High Static – Fan Diameter (mm)	254 x 254	381 x 381	381 x 381	381 x 381	381 x 381	457 x 457
Cond. Coil						
Material – Tube/Fin	Cu / Al	Cu / Al	Cu / Al	Cu / Al	Cu / Al	Cu / Al
Coil type	10mm RTPF	10mm RTPF	10mm RTPF	10mm RTPF	10mm RTPF	10mm RTPF
Rows / Fins per meter	2 / 670	2 / 670	2 / 670	2 / 670	3 / 670	2 / 670
Total face area (m^2)	2	2	2	2	2	2@2
Cond. fan / motor						
Qty / Motor drive type	1 / direct	2 / direct	2 / direct	2 / direct	1 / direct	3 / direct
Motor kW / r/s	.186 / 15	.186 / 18	.186 / 18	.186 / 18	.746 / 20	.186 / 18
Fan diameter (mm)	559	559	559	559	762	559
Filters						
RA Filter # / size (mm)	4 each 406 x 406 x 51	4 each 406 x 508 x 51	4 each 508 x 508 x 51	4 each 508 x 508 x 51	4 each 508 x 508 x 51	6 each 457 x 457 x 51
OA inlet screen # / size (mm)	1 each 508 x 610 x 25	1 each 508 x 610 x 25	1 each 508 x 610 x 25	1 each 508 x 610 x 25	1 each 508 x 610 x 25	Vert. 2 each 610 x 686 x 25 Horiz. 1 each 792 x 991 x 25

Table 6 – PHYSICAL DATA (COOLING) ENGLISH

Refrigeration System						
# Circuits / # Comp. / Type	1 / 1 / Scroll	2 / 2 / Scroll	2 / 2 / Scroll	2 / 2 / Scroll	2 / 2 / Scroll	2 / 2 / Scroll
R–410A charge A/B (lbs – oz)	12–14	6 – 12 / 6 – 12	9 – 3 / 9 – 5	8 – 12 / 8 – 15	12–9 / 12–12	15–14 / 16–12
Metering device	Acutrol	Acutrol	Acutrol	Acutrol	Acutrol	Acutrol
High–press. Trip / Reset (psig)	630 / 505	630 / 505	630 / 505	630 / 505	630 / 505	630 / 505
Low–press. Trip / Reset (psig)	54 / 117	54 / 117	54 / 117	54 / 117	54 / 117	54 / 117
Evap. Coil						
Material – Tube/Fin	Cu / Al	Cu / Al	Cu / Al	Cu / Al	Cu / Al	Cu / Al
Coil type	3/8–in RTPF	3/8–in RTPF	3/8–in RTPF	3/8–in RTPF	3/8–in RTPF	3/8–in RTPF
Rows / FPI	4 / 15	3 / 15	3 / 15	4 / 15	4 / 15	3 / 15
Total face area (ft^2)	7.3	8.9	11.1	11.1	11.1	17.5
Condensate drain conn. size	3/4–in	3/4–in	3/4–in	3/4–in	3/4–in	3/4–in
Evap. fan and motor						
Standard Static – Motor Qty / Drive type	1 / Belt	1 / Belt	1 / Belt	1 / Belt	1 / Belt	1 / Belt
Standard Static – Max BHP	1.1	1.1	1.1	1.5	1.8	2.1
Standard Static – RPM range	855–1211	451–689	451–689	451–689	652–843	462–590
Standard Static – Motor frame size	56	56	56	56	56	56Y
Standard Static – Fan Qty / Type	1 / Centrifugal	1 / Centrifugal	1 / Centrifugal	1 / Centrifugal	1 / Centrifugal	1 / Centrifugal
Standard Static – Fan Diameter (in)	10 x 10	15 x 15	15 x 15	15 x 15	15 x 15	18 x 18
Medium Static – Motor Qty / Drive type	N/A	1 / Belt	1 / Belt	1 / Belt	1 / Belt	1 / Belt
Medium Static – Max BHP	N/A	1.8	1.5	2.3	2.3	2.7
Medium Static – RPM range	N/A	665–903	665–903	665–903	665–903	562–719
Medium Static – Motor frame size	N/A	56	56	56	56	56HZ
Medium Static – Fan Qty / Type	N/A	1 / Centrifugal	1 / Centrifugal	1 / Centrifugal	1 / Centrifugal	1 / Centrifugal
Medium Static – Fan Diameter (in)	N/A	15 x 15	15 x 15	15 x 15	15 x 15	18 x 18
High Static – Motor Qty / Drive type	1 / Belt	1 / Belt	1 / Belt	1 / Belt	1 / Belt	1 / Belt
High Static – Max BHP	1.8	2.9	2.3	2.9	2.9	4.5
High Static – RPM range	1211–1568	881–1140	881–1140	881–1140	881–1140	695–854
High Static – Motor frame size	56	56	56	56	56	S184T
High Static – Fan Qty / Type	1 / Centrifugal	1 / Centrifugal	1 / Centrifugal	1 / Centrifugal	1 / Centrifugal	1 / Centrifugal
High Static – Fan Diameter (in)	10 x 10	15 x 15	15 x 15	15 x 15	15 x 15	18 x 18
Cond. Coil						
Material – Tube/Fin	Cu / Al	Cu / Al	Cu / Al	Cu / Al	Cu / Al	Cu / Al
Coil type	3/8–in RTPF	3/8–in RTPF	3/8–in RTPF	3/8–in RTPF	3/8–in RTPF	3/8–in RTPF
Rows / FPI	2 / 17	2 / 17	2 / 17	2 / 17	3 / 17	2/17
Total face area (ft^2)	21.3	20.5	25.1	25.1	25.1	2 @ 23.1
Cond. fan / motor						
Qty / Motor drive type	1 / direct	2 / direct	2 / direct	2 / direct	1 / direct	3 / direct
Motor HP / RPM	1/4 / 900	1/4 / 1100	1/4 / 1100	1/4 / 1100	1 / 1175	1/4 / 1100
Fan diameter (in)	22	22	22	22	30	22
Filters						
RA Filter # / size (in)	4 / 16 x 16 x 2	4 / 16 x 20 x 2	4 / 20 x 20 x 2	4 / 20 x 20 x 2	4 / 20 x 20 x 2	6 / 18 x 24 x 2
OA inlet screen # / size (in)	1 / 20 x 24 x 1	1 / 20 x 24 x 1	1 / 20 x 24 x 1	1 / 20 x 24 x 1	1 / 20 x 24 x 1	V 2 / 24 x 27 x 1 H 1 / 30 x 39 x1

Table 7 – ELECTRIC HEAT - ELECTRICAL DATA **A07 - D09**

UNIT	NOM. V–PH–HZ	IFM TYPE	ELECTRIC HEATER PART NUMBER	NOMINAL (kW)	APPLICATION (kW)	APPLICATION OUTPUT	
						kW	MBH
50TC–A07	400–3–50	STD	CRHEATER106A00	4.2	4.2	4.2	14.2
			CRHEATER108A00	8.0	8.0	7.9	27.2
			CRHEATER109A00	9.7	9.7	9.7	33.2
			CRHEATER108A00,108A00	16.0	16.0	15.9	54.5
			CRHEATER108A00,109A00	17.7	17.7	17.7	60.4
		HIGH	CRHEATER106A00	4.2	4.2	4.2	14.2
			CRHEATER108A00	8.0	8.0	7.9	27.2
			CRHEATER109A00	9.7	9.7	9.7	33.2
			CRHEATER108A00,108A00	16.0	16.0	15.9	54.5
			CRHEATER108A00,109A00	17.7	17.7	17.7	60.4
50TC–D08	400–3–50	STD	CRHEATER116A00	9.7	9.7	9.6	32.9
			CRHEATER113A00	11.5	11.5	11.5	39.1
			CRHEATER114A00	19.3	19.3	19.3	65.9
			CRHEATER115A00	22.9	22.9	22.9	78.2
			CRHEATER114A00,116A00	29.0	29.0	28.9	98.8
		MED	CRHEATER116A00	9.7	9.7	9.6	32.9
			CRHEATER113A00	11.5	11.5	11.5	39.1
			CRHEATER114A00	19.3	19.3	19.3	65.9
			CRHEATER115A00	22.9	22.9	22.9	78.2
			CRHEATER114A00,116A00	29.0	29.0	28.9	98.8
		HIGH	CRHEATER116A00	9.7	9.7	9.6	32.9
			CRHEATER113A00	11.5	11.5	11.5	39.1
			CRHEATER114A00	19.3	19.3	19.3	65.9
			CRHEATER115A00	22.9	22.9	22.9	78.2
			CRHEATER114A00,116A00	29.0	29.0	28.9	98.8
50TC–D09	460–3–50	STD	CRHEATER116A00	9.7	9.7	9.6	32.9
			CRHEATER113A00	11.5	11.5	11.5	39.1
			CRHEATER114A00	19.3	19.3	19.3	65.9
			CRHEATER115A00	22.9	22.9	22.9	78.2
			CRHEATER114A00,116A00	29.0	29.0	28.9	98.8
		MED	CRHEATER116A00	9.7	9.7	9.6	32.9
			CRHEATER113A00	11.5	11.5	11.5	39.1
			CRHEATER114A00	19.3	19.3	19.3	65.9
			CRHEATER115A00	22.9	22.9	22.9	78.2
			CRHEATER114A00,116A00	29.0	29.0	28.9	98.8
		HIGH	CRHEATER116A00	9.7	9.7	9.6	32.9
			CRHEATER113A00	11.5	11.5	11.5	39.1
			CRHEATER114A00	19.3	19.3	19.3	65.9
			CRHEATER115A00	22.9	22.9	22.9	78.2
			CRHEATER114A00,116A00	29.0	29.0	28.9	98.8

Table 8 – ELECTRIC HEAT - ELECTRICAL DATA **D12 - D16**

UNIT	NOM. V–PH–HZ	IFM TYPE	ELECTRIC HEATER PART NUMBER	NOMINAL (kW)	APPLICATION (kW)	APPLICATION OUTPUT	
						kW	MBH
50TC–D12	400–3–50	STD	CRHEATER116A00	9.7	9.7	9.6	32.9
			CRHEATER113A00	11.5	11.5	11.5	39.1
			CRHEATER114A00	19.3	19.3	19.3	65.9
			CRHEATER115A00	22.9	22.9	22.9	78.2
			CRHEATER114A00,116A00	29.0	29.0	28.9	98.8
		MED	CRHEATER116A00	9.7	9.7	9.6	32.9
			CRHEATER113A00	11.5	11.5	11.5	39.1
			CRHEATER114A00	19.3	19.3	19.3	65.9
			CRHEATER115A00	22.9	22.9	22.9	78.2
			CRHEATER114A00,116A00	29.0	29.0	28.9	98.8
		HIGH	CRHEATER116A00	9.7	9.7	9.6	32.9
			CRHEATER113A00	11.5	11.5	11.5	39.1
			CRHEATER114A00	19.3	19.3	19.3	65.9
			CRHEATER115A00	22.9	22.9	22.9	78.2
			CRHEATER114A00,116A00	29.0	29.0	28.9	98.8
50TC–D14	400–3–50	STD	CRHEATER116A00	9.7	9.7	9.6	32.9
			CRHEATER113A00	11.5	11.5	11.5	39.1
			CRHEATER114A00	19.3	19.3	19.3	65.9
			CRHEATER115A00	22.9	22.9	22.9	78.2
			CRHEATER114A00,116A00	29.0	29.0	28.9	98.8
		MED	CRHEATER116A00	9.7	9.7	9.6	32.9
			CRHEATER113A00	11.5	11.5	11.5	39.1
			CRHEATER114A00	19.3	19.3	19.3	65.9
			CRHEATER115A00	22.9	22.9	22.9	78.2
			CRHEATER114A00,116A00	29.0	29.0	28.9	98.8
		HIGH	CRHEATER116A00	9.7	9.7	9.6	32.9
			CRHEATER113A00	11.5	11.5	11.5	39.1
			CRHEATER114A00	19.3	19.3	19.3	65.9
			CRHEATER115A00	22.9	22.9	22.9	78.2
			CRHEATER114A00,116A00	29.0	29.0	28.9	98.8
50TC–D16	400–3–50	STD	CRHEATER292A00	11.5	11.5	11.5	39.1
			CRHEATER295A00	23.3	23.3	23.3	79.4
			CRHEATER289A00,295A00	30.2	30.2	30.2	103.1
			CRHEATER292A00,295A00	34.7	34.7	34.7	118.5
			CRHEATER295A00,295A00	46.5	46.5	46.5	158.8
		MED	CRHEATER292A00	11.5	11.5	11.5	39.1
			CRHEATER295A00	23.3	23.3	23.3	79.4
			CRHEATER289A00,295A00	30.2	30.2	30.2	103.1
			CRHEATER292A00,295A00	34.7	34.7	34.7	118.5
			CRHEATER295A00,295A00	46.5	46.5	46.5	158.8
		HIGH	CRHEATER292A00	11.5	11.5	11.5	39.1
			CRHEATER295A00	23.3	23.3	23.3	79.4
			CRHEATER289A00,295A00	30.2	30.2	30.2	103.1
			CRHEATER292A00,295A00	34.7	34.7	34.7	118.5
			CRHEATER295A00,295A00	46.5	46.5	46.5	158.8

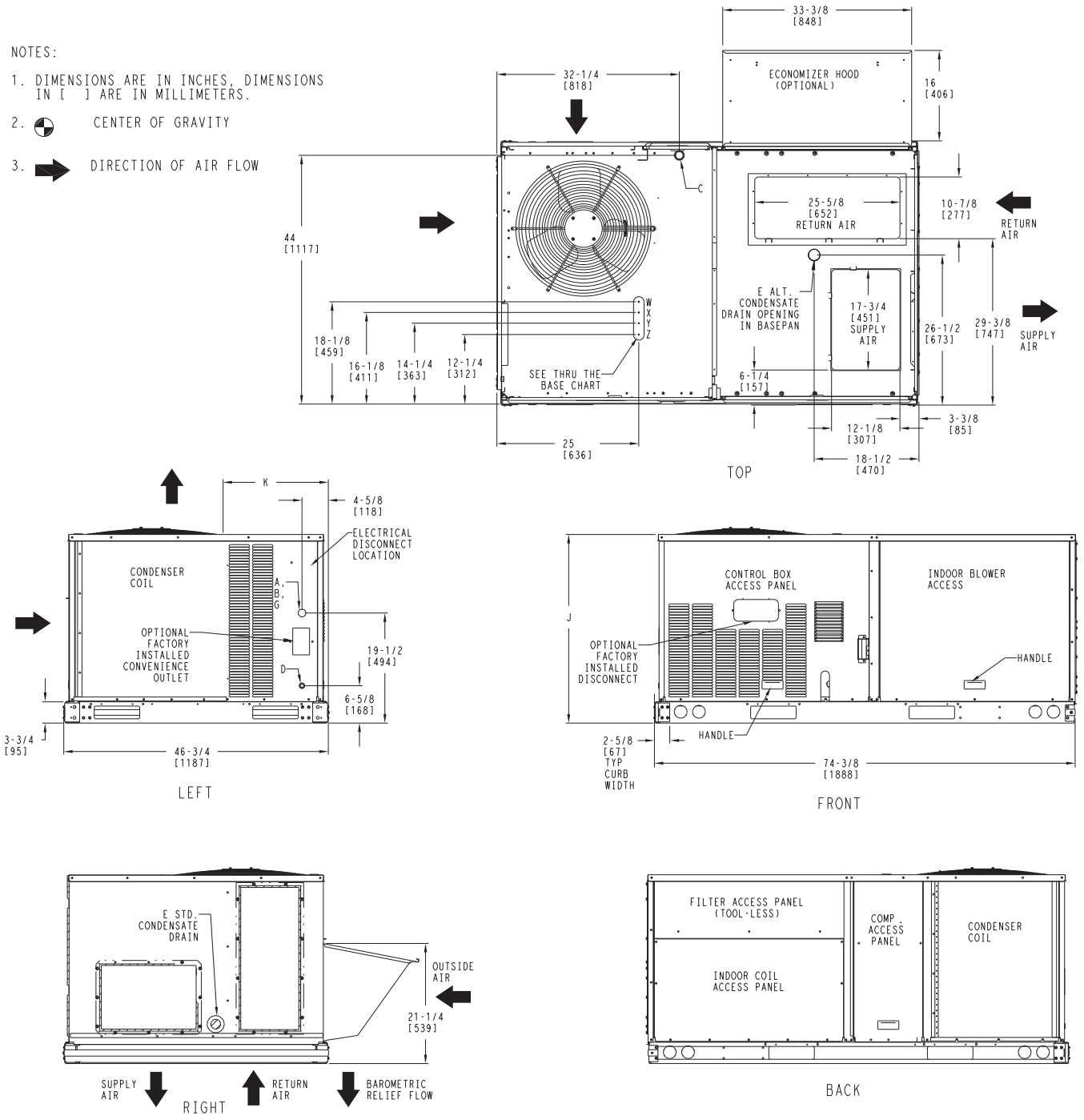

Fig. 1 – Dimensions 50TC-A07

CURBS & WEIGHTS DIMENSIONS (cont.)

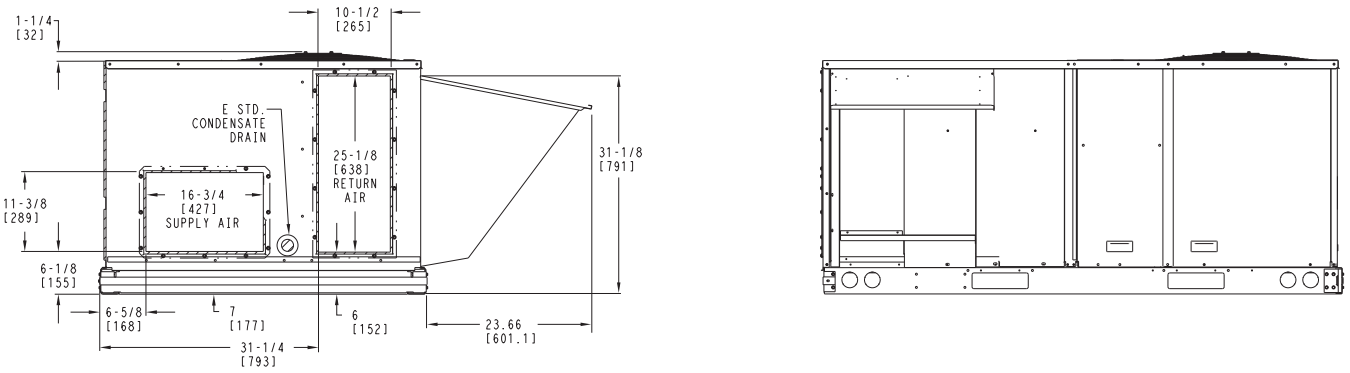

	CONNECTION SIZES
A	1 3/8" [35] DIA FIELD POWER SUPPLY HOLE
B	2" [50] DIA POWER SUPPLY KNOCKOUT
C	1 3/4" [51] DIA GAUGE ACCESS PLUG
D	7/8" [22] DIA FIELD CONTROL WIRING HOLE
E	3/4"-14 NPT CONDENSATE DRAIN
G	2 1/2 " [64] DIA POWER SUPPLY KNOCK-OUT

THRU-THE-BASE CHART THESE HOLES REQUIRED FOR USE CRBTMPWR001A01, 003A01			
	THREADED CONDUIT SIZE	WIRE USE	REQ'D HOLE SIZES (MAX.)
W	1/2"	ACC.	7/8" [22.2]
X	1/2"	24V	7/8" [22.2]
Y*	3/4" (001,003)	POWER	1 1/8" [28.4]
Z**	(003) 1/2" FPT	GAS	1 3/16" [30.0]
	FOR "THRU-THE-BASEPAN" FACTORY OPTION, FITTINGS FOR ONLY X,Y, & Z ARE PROVIDED		
*	SELECT EITHER 3/4" OR 1/2" FOR POWER, DEPENDING ON WIRE SIZE		
**	(001) PROVIDES 3/4" FPT THRU CURB FLANGE & FITTING.		

UNIT	J	K
50TC-A07	41 3/8 [1051]	14 7/8 [377]

C09447B

Fig. 2 - Dimensions 50TC-A07

UNIT	STD. UNIT WEIGHT		CORNER WEIGHT (A)		CORNER WEIGHT (B)		CORNER WEIGHT (C)		CORNER WEIGHT (D)		C.G.		HEIGHT
	KG.	LBS.	KG.	LBS.	KG.	LBS.	KG.	LBS.	KG.	LBS.	X	Y	Z
50TC-A07	275	607	68	150	73	160	69	153	65	144	38 [965]	22 [559]	20 3/4 [527]

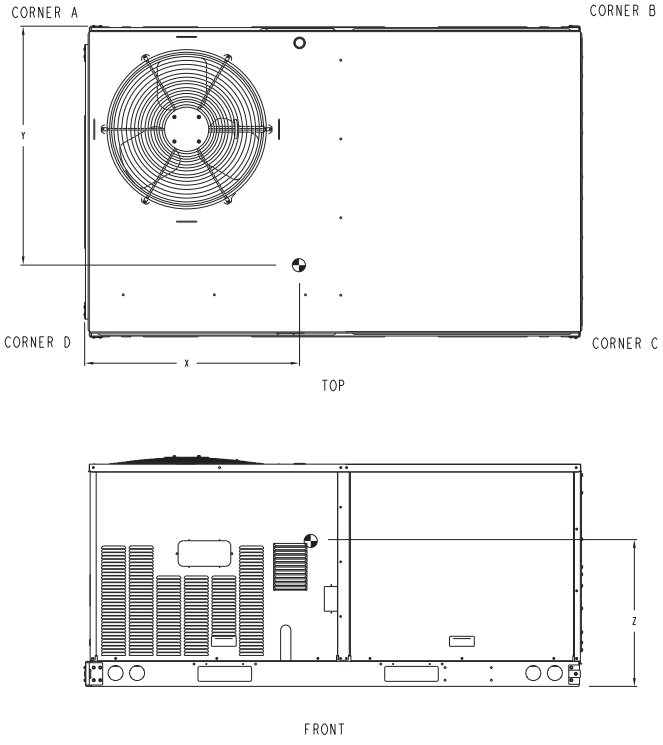

C09448

Fig. 3 - Dimensions 50TC-A07

CURBS & WEIGHTS DIMENSIONS (cont.)

CONNECTOR PKG. ACCY.	B	C	D ALT DRAIN HOLE	POWER	CONTROL	ACCESSORY POWER
CRBTMPWR003A01	1'-9 11/16" [551]	1'-4" [406]	1 3/4" [44.5]	3/4" [19] NPT	1/2" [12.7] NPT	1/2" [12.7] NPT
CRBTMPWR004A01				1 1/4" [31.7]		

ROOFCURB ACCESSORY	A	UNIT SIZE
CRRFCURB001A01	1'-2" [356]	50TC-A07
CRRFCURB002A01	2'-0" [610]	

NOTES:
1. Roof curb accessory is shipped disassembled.
2. Insulated panels.
3. Dimensions in [ ] are in millimeters.
4. Roof curb: galvanized steel.
5. Attach ductwork to curb (flanges of duct rest on curb).
6. Service clearance: 4 ft on each side.
7. Direction of airflow.

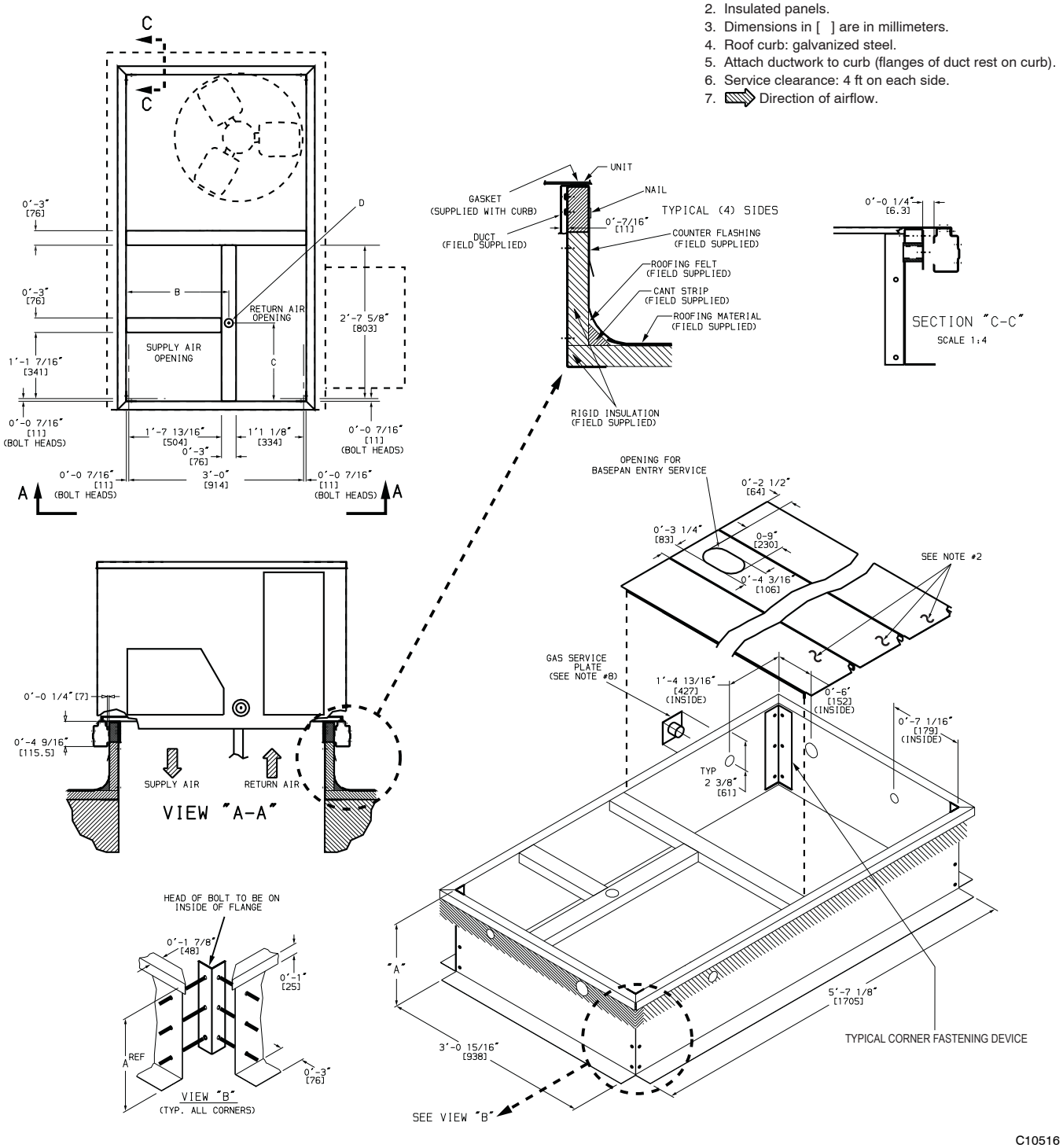

C10516

Fig. 4 - Curb Dimensions - 50TC-A07

CURBS & WEIGHTS DIMENSIONS (cont.)

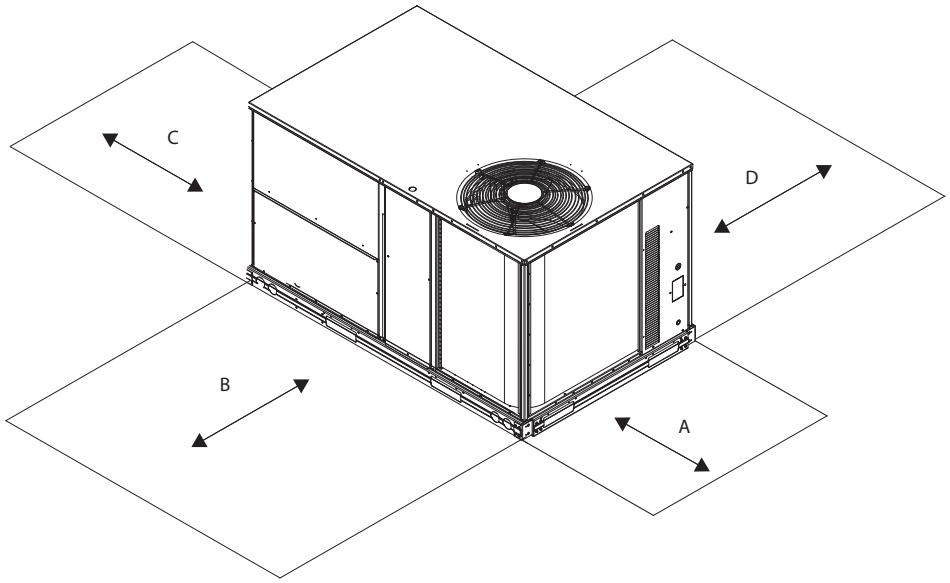

C08337

Fig. 5 - Service Clearance

LOC	DIMENSION	CONDITION
A	1219 mm (48–in)	Unit disconnect is mounted on panel
	457 mm (18–in)	No disconnect, convenience outlet option
	457 mm (18–in)	Recommended service clearance
	305 mm (12–in)	Minimum clearance
B	1067 mm (42–in)	Surface behind servicer is grounded (e.g., metal, masonry wall)
	914 mm (36–in)	Surface behind servicer is electrically non–conductive (e.g., wood, fiberglass)
	Special	Check for sources of flue products within 3 m (10–ft) of unit fresh air intake hood
C	914 mm (36–in)	Side condensate drain is used
	457 mm (18–in)	Minimum clearance
D	1067 mm (42–in)	Surface behind servicer is grounded (e.g., metal, masonry wall, another unit)
	914 mm (36–in)	Surface behind servicer is electrically non–conductive (e.g., wood, fiberglass)

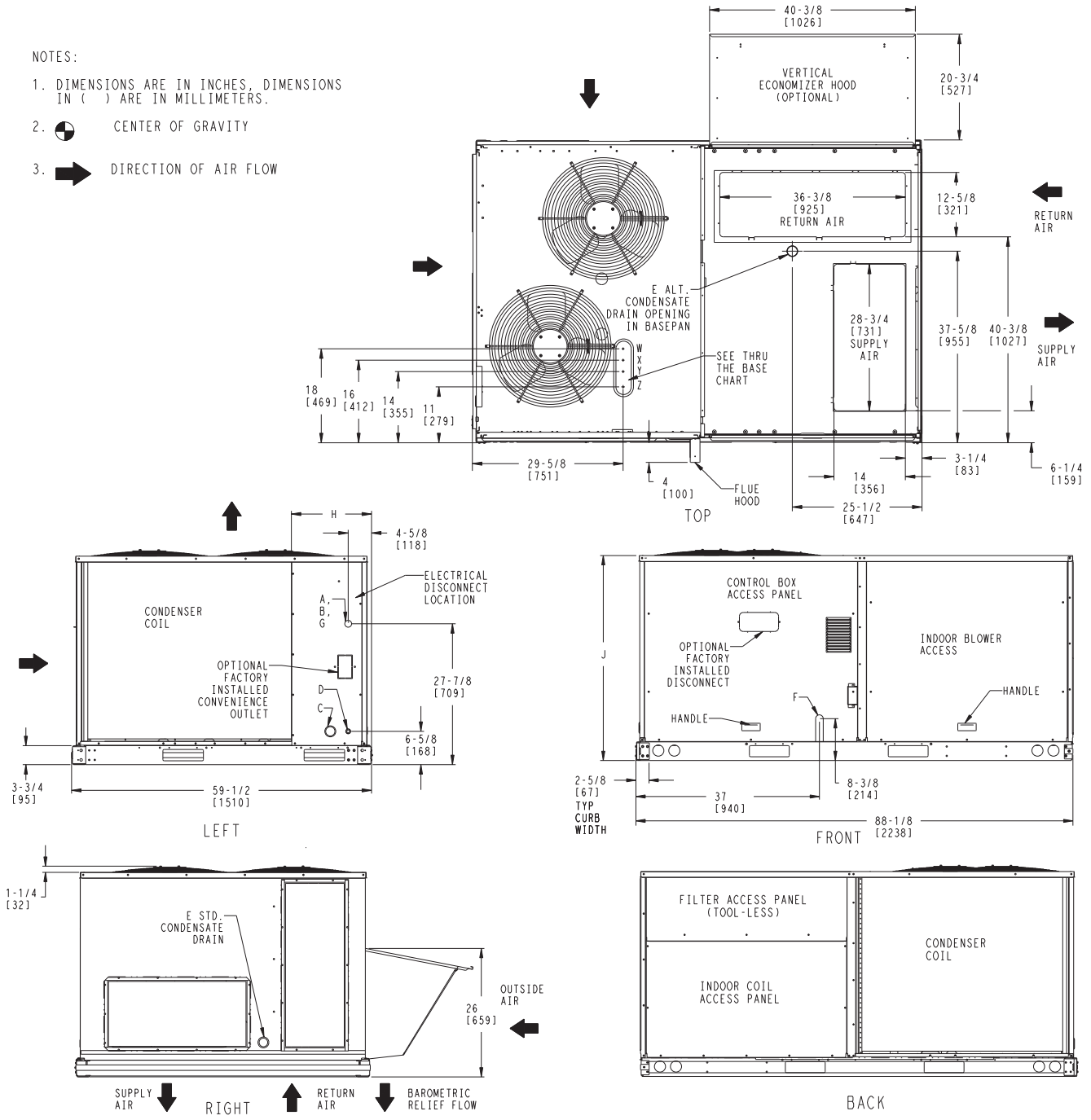

Fig. 6 - Dimensions 50TC 08-12

CURBS & WEIGHTS DIMENSIONS (cont.)

UNIT	STD. UNIT WEIGHT *		CORNER WEIGHT (A)		CORNER WEIGHT (B)		CORNER WEIGHT (C)		CORNER WEIGHT (D)		C.G.		
	LBS.	KG.	LBS.	KG.	LBS.	KG.	LBS.	KG.	LBS.	KG.	X	Y	Z
50TC-D08	750	340.5	156	70.8	153	69.5	219	99.4	222	100.8	43 3/4 [1111.3]	35 [889]	20 [508]
50TC-D09	855	388.2	223	101.2	171	77.6	200	90.8	261	118.5	38 3/8 [975]	32 1/8 [816]	19 1/8 [486]
50TC-D12	865	392.7	225	102.2	173	78.5	203	92.2	264	120	38 3/8 [975]	32 1/8 [816]	19 1/8 [486]

* STANDARD UNIT WEIGHT IS WITHOUT ELECTRIC HEAT AND WITHOUT PACKAGING.
FOR OTHER OPTIONS AND ACCESSORIES, REFER TO THE PRODUCT DATA CATALOG.

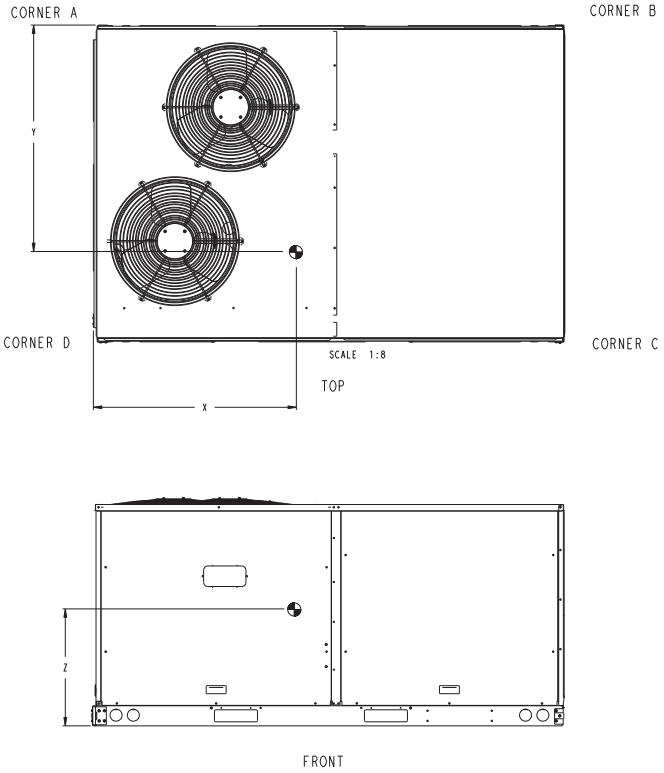

C09450B

Fig. 7 - Dimensions 50TC 08-12

Horizontal Connections / Economizer

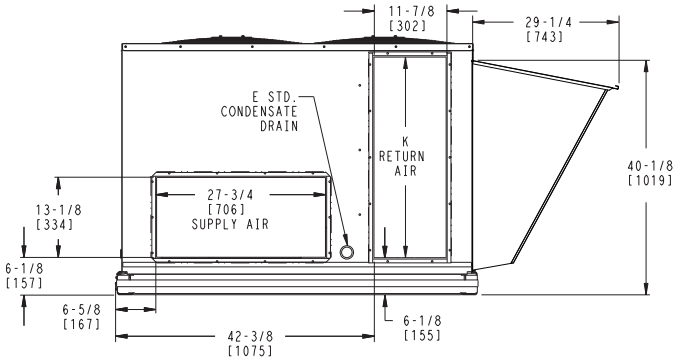

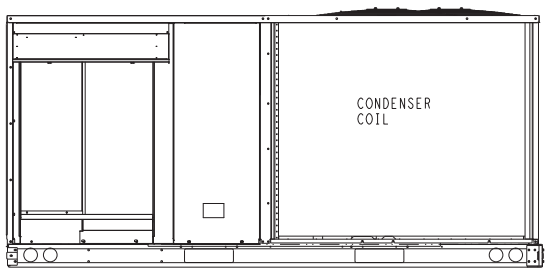

	CONNECTION SIZES
A	1 3/8" DIA [35] FIELD POWER SUPPLY HOLE
B	2 1/2" [64] DIA POWER SUPPLY KNOCKOUT
C	1 3/4" DIA [51] GAUGE ACCESS PLUG
D	7/8" DIA [22] FIELD CONTROL WIRING HOLE
E	3/4"-14 NPT CONDENSATE DRAIN
G	2 " DIA [51] POWER SUPPLY KNOCK-OUT

THRU-THE-BASE CHART THESE HOLES REQUIRED FOR USE CRBTMPWR002A01			
	THREADED CONDUIT SIZE	WIRE USE	REQ'D HOLE SIZES (MAX.)
W	1/2"	ACC.	7/8" (22.2)
X	1/2"	24V	7/8" (22.2)
Y	1 1/4" (002)	POWER	1 3/4" (44.4)
	FOR "THRU-THE-BASEPAN" FACTORY OPTION, FITTINGS FOR ONLY X & Y ARE PROVIDED		

UNIT	J	K	H
50TC-D08	41 1/4 [1048]	33 [658]	15 7/8 [403]
50TC-D09	49 3/8 [1253]	37 1/4 [946]	15 7/8 [403]
50TC-D12	49 3/8 [1253]	37 1/4 [946]	15 7/8 [403]

C09451

Fig. 8 - Dimensions 50TC 08-12

CURBS & WEIGHTS DIMENSIONS (cont.)

ROOFCURB ACCESSORY	A	UNIT SIZE
CRRFCURB003A01	1' - 2" (356)	50TC08-12
CRRFCURB004A01	2' - 0" (610)	

NOTES:
1. ROOFCURB ACCESSORY IS SHIPPED DISASSEMBLED.
2. INSULATED PANELS: 1" THK. POLYURETHANE FOAM, 1-3/4 # DENSITY.
3. DIMENSIONS IN [ ] ARE IN MILLIMETERS.
4. ROOFCURB: 16 GAGE STEEL.
5. ATTACH DUCTWORK TO CURB. (FLANGES OF DUCT REST ON CURB)
6. SERVICE CLEARANCE 4' ON EACH SIDE.
7. ▨ DIRECTION OF AIR FLOW.
8. CONNECTOR PACKAGES CRBTMPWR001A01 AND 2A01 ARE FOR THRU-THE-CURB GAS TYPE. PACKAGES CRBTMPWR003A01 AND 4A01 ARE FOR THE THRU-THE-BOTTOM TYPE GAS CONNECTIONS.

CONNECTOR PKG. ACC.	B	C	D ALT DRAIN HOLE	GAS	POWER	CONTROL	ACCESSORY PWR
CRBTMPWR001A01 CRBTMPWR002A01	2'-8 7/16" [827]	1'-10 15/16" [583]	1 3/4" [44.5]	3/4" [19] NPT	3/4" [19] NPT 1 1/4" [31.7]	1/2" [12.7] NPT	1/2" [12.7] NPT
CRBTMPWR003A01	↓	↓	↓	1/2" [12.7] NPT	3/4" [19] NPT	↓	↓
CRBTMPWR004A01	↓	↓	↓	3/4" [19] NPT	1 1/4" [31.7]	↓	↓

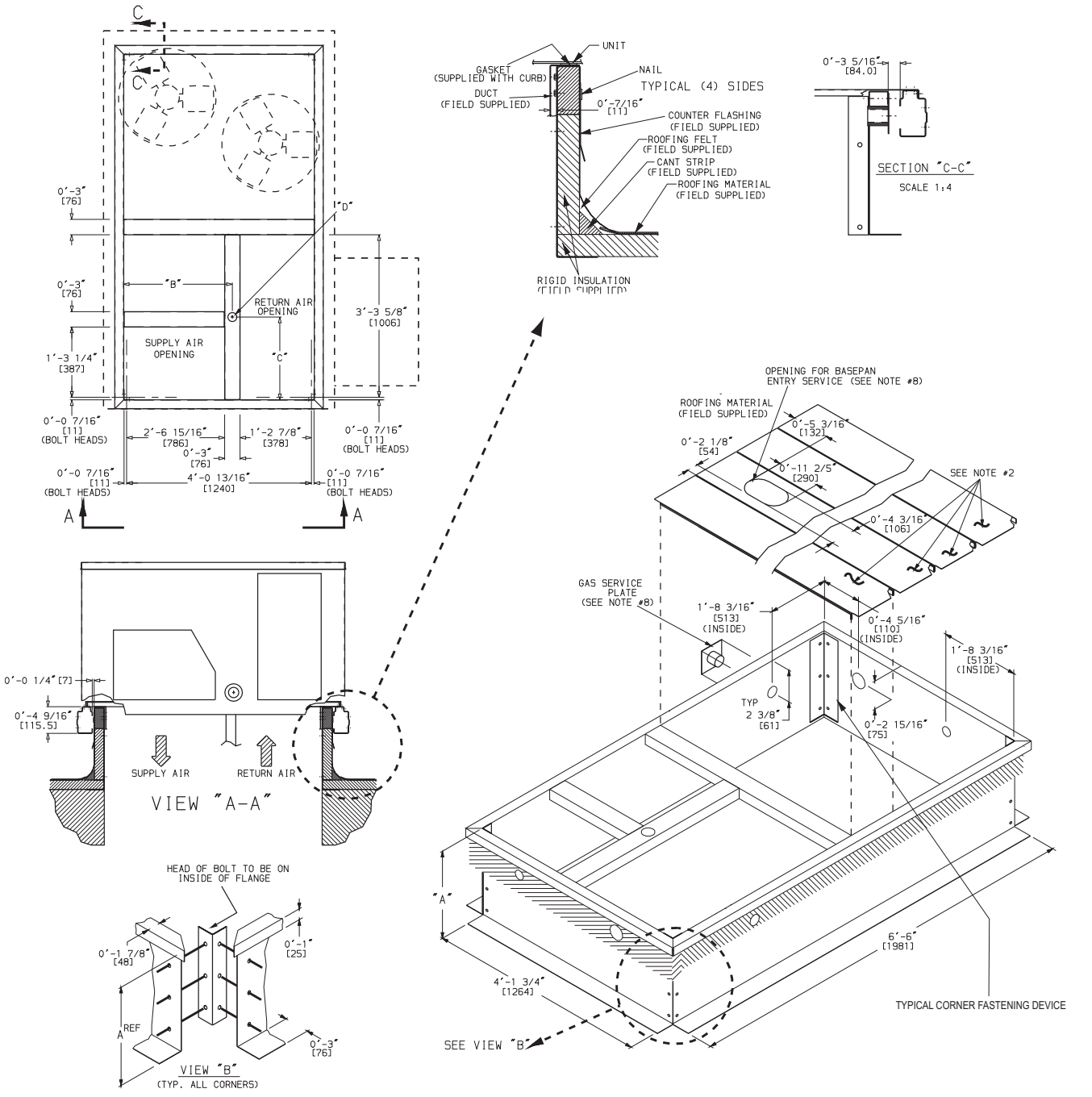

C10517

Fig. 9 - Curb Dimensions - 50TC-*08-12

CURBS & WEIGHTS DIMENSIONS (cont.)

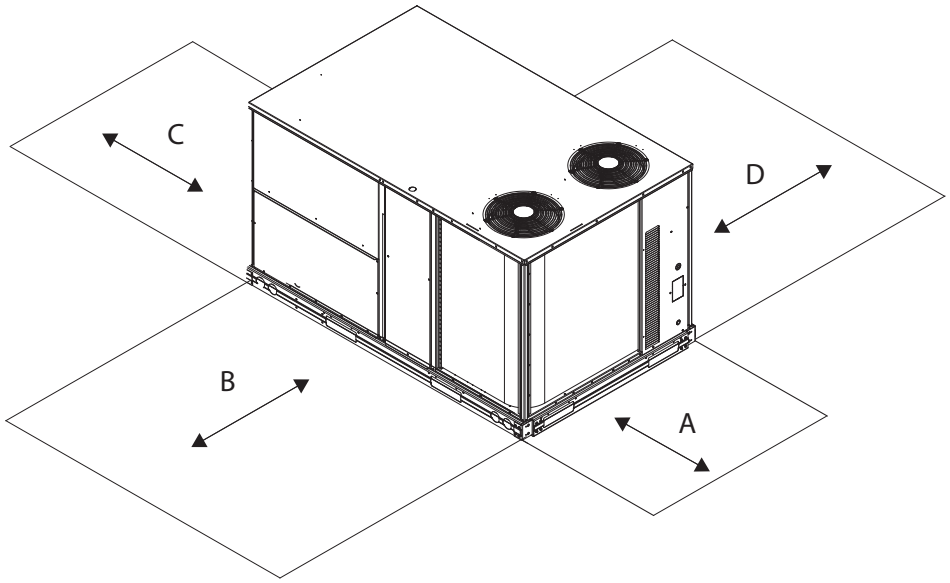

C10577

Fig. 10 - Service Clearance

LOC	DIMENSION	CONDITION
A	1219 mm (48–in)	Unit disconnect is mounted on panel
	457 mm (18–in)	No disconnect, convenience outlet option
	457 mm (18–in)	Recommended service clearance
	305 mm (12–in)	Minimum clearance
B	1067 mm (42–in)	Surface behind servicer is grounded (e.g., metal, masonry wall)
	914 mm (36–in)	Surface behind servicer is electrically non–conductive (e.g., wood, fiberglass)
	Special	Check for sources of flue products within 3m (10–ft) of unit fresh air intake hood
C	914 mm (36–in)	Side condensate drain is used
	457 mm (18–in)	Minimum clearance
D	1067 mm (42–in)	Surface behind servicer is grounded (e.g., metal, masonry wall, another unit)
	914 mm (36–in)	Surface behind servicer is electrically non–conductive (e.g., wood, fiberglass)

CURBS & WEIGHTS DIMENSIONS (cont.)

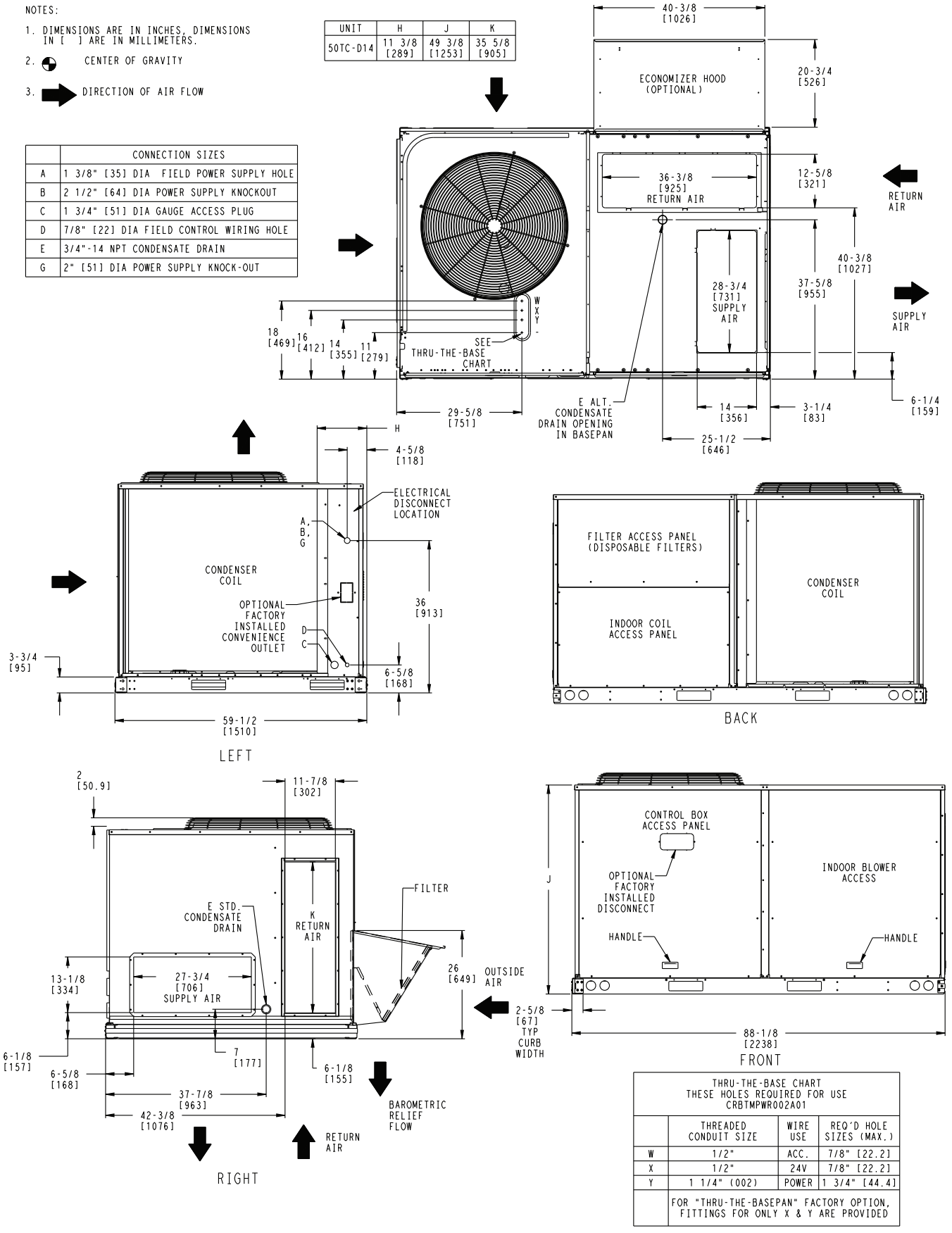

Fig. 11 – Dimensions 50TC 14

CURBS & WEIGHTS DIMENSIONS (cont.)

UNIT	STD. UNIT WEIGHT		CORNER WEIGHT (A)		CORNER WEIGHT (B)		CORNER WEIGHT (C)		CORNER WEIGHT (D)		C.G.		
	LBS.	KG.	LBS.	KG.	LBS.	KG.	LBS.	KG.	LBS.	KG.	X	Y	Z
50TC-D14	1030	467	294	133	146	66	197	89	395	179	28 3/8 [721]	33 1/8 [841]	21 3/8 [543]

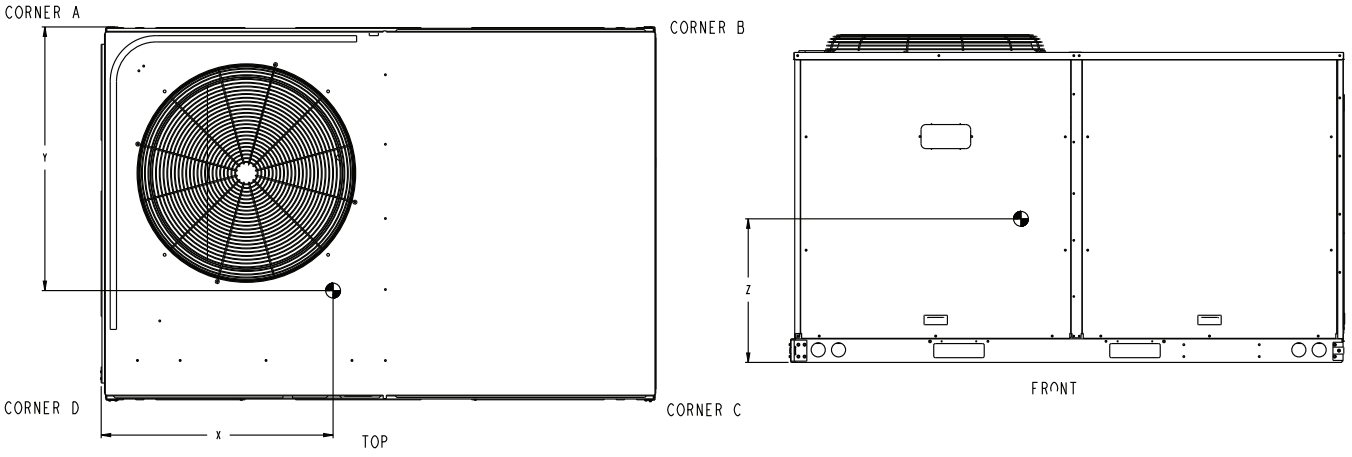

C10443

Fig. 12 - Dimensions 50TC 14

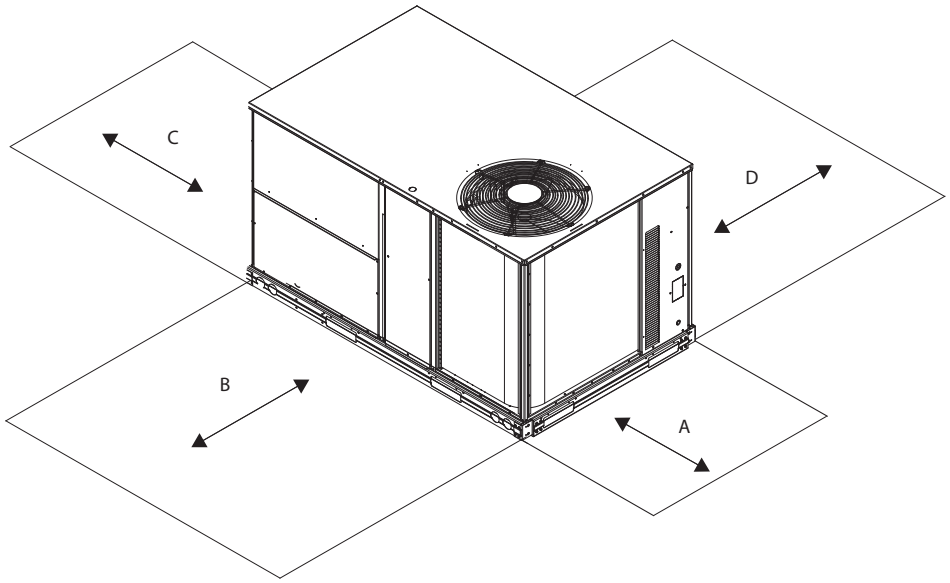

C08337

Fig. 13 - Service Clearance

LOC	DIMENSION	CONDITION
A	1219 mm (48–in)	Unit disconnect is mounted on panel
	457 mm (18–in)	No disconnect, convenience outlet option
	457 mm (18–in)	Recommended service clearance
	305 mm (12–in)	Minimum clearance
B	1067 mm (42–in)	Surface behind servicer is grounded (e.g., metal, masonry wall)
	914 mm (36–in)	Surface behind servicer is electrically non–conductive (e.g., wood, fiberglass)
	Special	Check for sources of flue products within 3m (10–ft) of unit fresh air intake hood
C	914 mm (36–in)	Side condensate drain is used
	457 mm (18–in)	Minimum clearance
D	1067 mm (42–in)	Surface behind servicer is grounded (e.g., metal, masonry wall, another unit)
	914 mm (36–in)	Surface behind servicer is electrically non–conductive (e.g., wood, fiberglass)

CURBS & WEIGHTS DIMENSIONS (cont.)

NOTES:

1. DIMENSIONS ARE IN INCHES. DIMENSIONS IN [ ] ARE IN MILLIMETERS.
2. ⊕ CENTER OF GRAVITY
3. ➡ DIRECTION OF AIR FLOW

	CONNECTION SIZES
B	2 1/2" [64] DIA POWER SUPPLY HOLE
D	7/8" [22] DIA FIELD CONTROL WIRING HOLE
E	3/4"-14 NPT CONDENSATE DRAIN
F	7/8" [22] DIA FIELD CONVENIENCE OUTLET HOLE

THRU-THE-BASE CHART THESE HOLES REQUIRED FOR USE CRBTMPWR005A00,006A00,007A00				
ACCESSORY NO.		THREADED CONDUIT SIZE	WIRE USE	REQ'D HOLE SIZES (MAX.)
005	W	1/2"	ACC.	7/8" [22.2]
	X	1/2"	24V	7/8" [22.2]
	Y	1 1/4"	POWER	1 1/2" [38.1]
006	W	1/2"	ACC.	7/8" [22.2]
	X	1/2"	24V	7/8" [22.2]
	Y	1 1/2"	POWER	2" [50.8]
007	W	1/2"	ACC.	7/8" [22.2]
	X	1/2"	24V	7/8" [22.2]
	Y	2"	POWER	2 1/2" [63.5]
	FOR "THRU-THE-BASEPAN" FACTORY OPTION, FITTINGS FOR X & Y ARE PROVIDED AS SPECIFIED ON "006".			

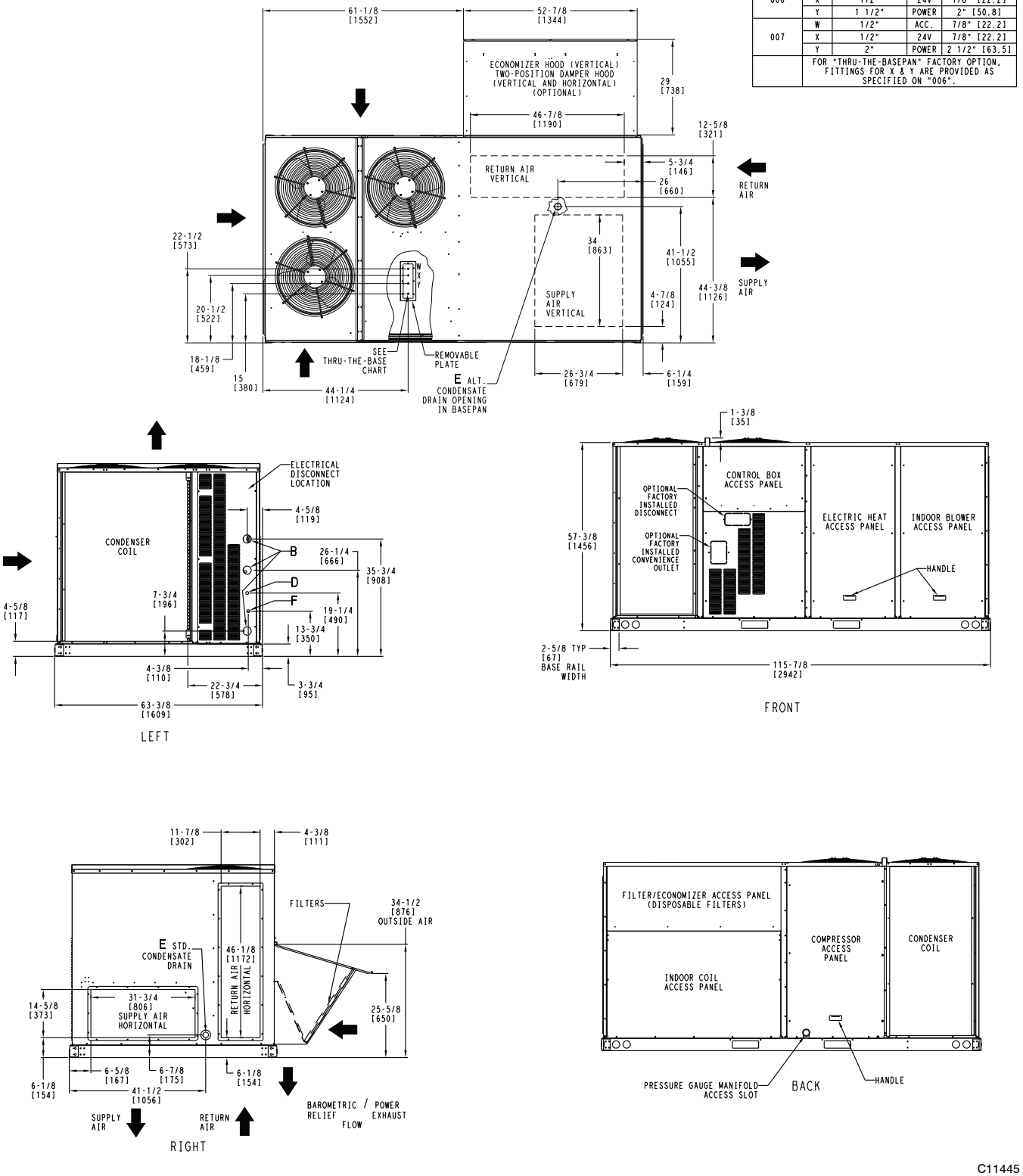

C11445

Fig. 14 - Dimensions 50TC 16

CURBS & WEIGHTS DIMENSIONS (cont.)

UNIT	STD UNIT WEIGHT		CORNER WEIGHT (A)		CORNER WEIGHT (B)		CORNER WEIGHT (C)		CORNER WEIGHT (D)		C.G.		
	LBS.	KG.	LBS.	KG.	LBS.	KG.	LBS.	KG.	LBS.	KG.	X	Y	Z
50TC 16	1305	593	268	122	325	148	389	177	322	146	58 1/2 [1486]	32 [813]	21 [533]

STANDARD UNIT WEIGHT IS WITHOUT ELECTRIC HEAT & WITHOUT PACKAGING.
FOR OPTIONS & ACCESSORIES, REFER TO THE PRODUCT DATA CATALOG.

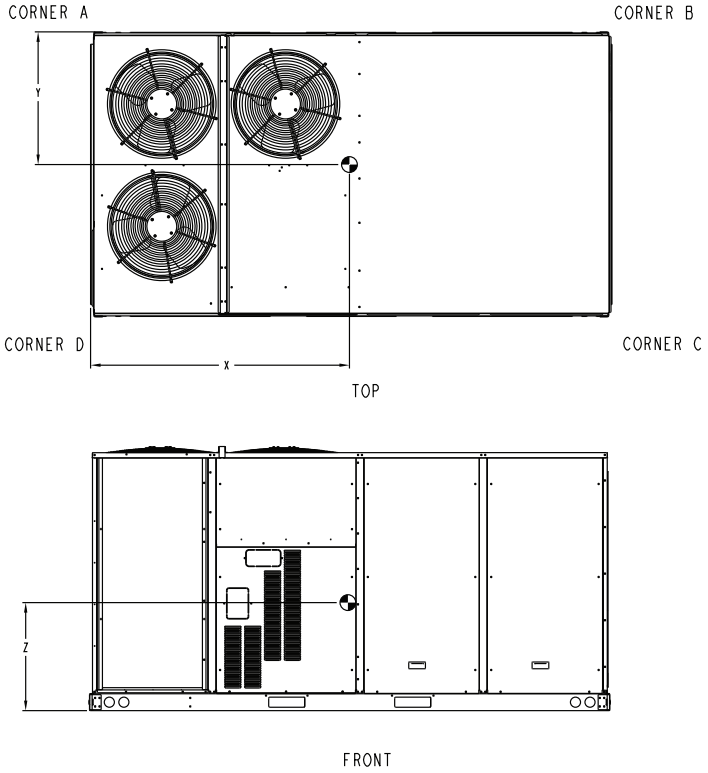

Horizontal Connections / Economizer

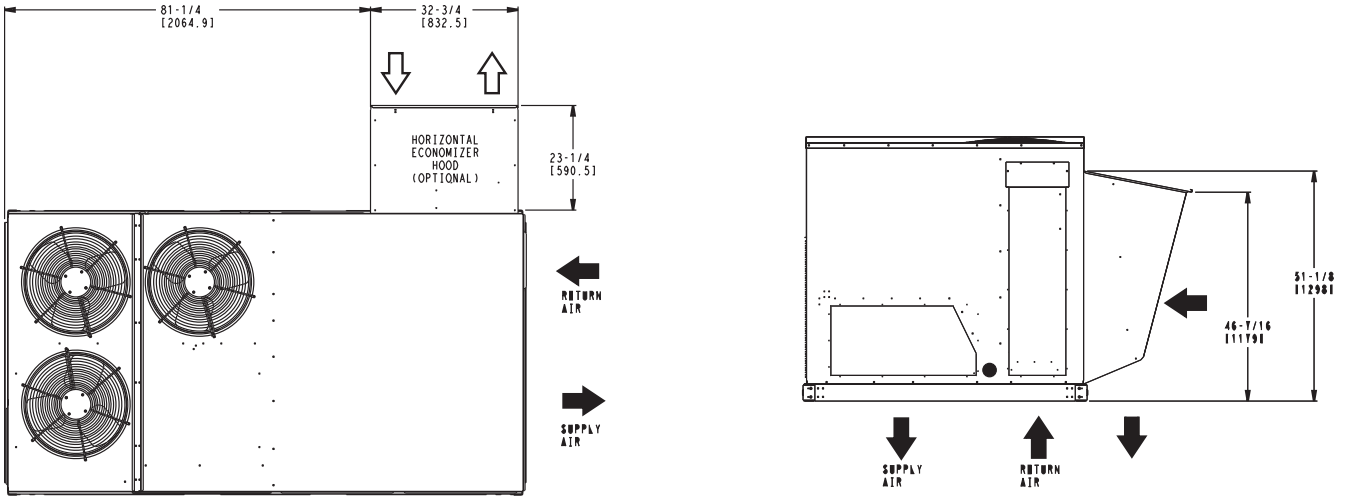

C11446

Fig. 15 - Dimensions 50TC 16

CURBS & WEIGHTS DIMENSIONS (cont.)

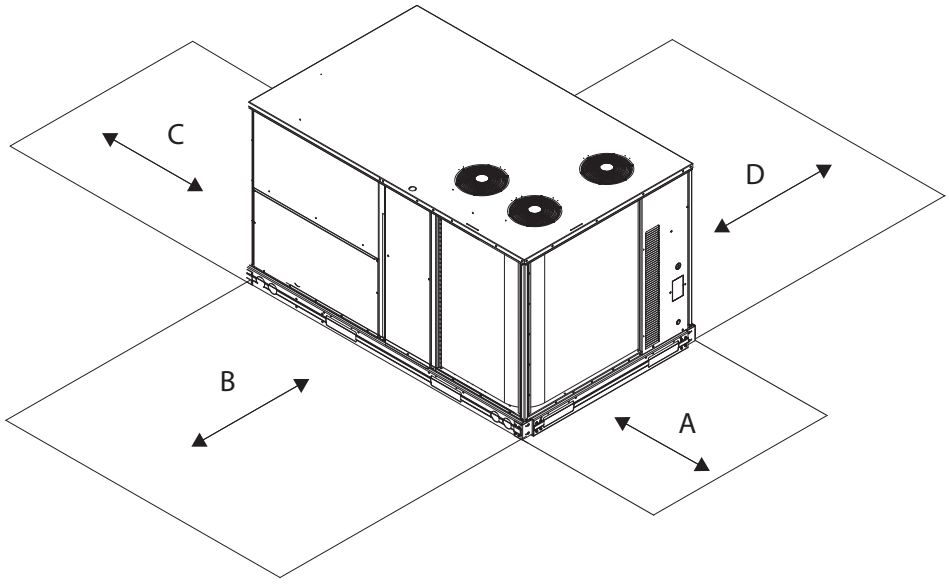

C10578B

Fig. 16 - Service Clearance

LOC	DIMENSION	CONDITION
A	1219 mm (48–in)	Unit disconnect is mounted on panel
	457 mm (18–in)	No disconnect, convenience outlet option
	457 mm (18–in)	Recommended service clearance
	305 mm (12–in)	Minimum clearance
B	1067 mm (42–in)	Surface behind servicer is grounded (e.g., metal, masonry wall)
	914 mm (36–in)	Surface behind servicer is electrically non–conductive (e.g., wood, fiberglass)
	Special	Check for sources of flue products within 3m (10–ft) of unit fresh air intake hood
C	914 mm (36–in)	Side condensate drain is used
	457 mm (18–in)	Minimum clearance
D	1067 mm (42–in)	Surface behind servicer is grounded (e.g., metal, masonry wall, another unit)
	914 mm (36–in)	Surface behind servicer is electrically non–conductive (e.g., wood, fiberglass)

APPLICATION DATA

Min operating ambient temp (cooling):

In mechanical cooling mode, your Carrier rooftop can safely operate down to an outdoor ambient temperature of 4°C (40°F) and -4°C (25°F), with an accessory winter start kit. It is possible to provide cooling at lower outdoor ambient temperatures by using less outside air, economizers, and/or accessory low ambient kits.

Max operating ambient temp (cooling):

The maximum operating ambient temperature for cooling mode is 52°C (125°F). While cooling operation above 52°C (125°F) may be possible, it could cause either a reduction in performance, reliability, or a protective action by the unit's internal safety devices.

Min and max airflow (cooling mode):

To maintain safe and reliable operation of your rooftop, operate within the cooling airflow limits. Operating above the max may cause blow-off, undesired airflow noise, or airflow related problems with the rooftop unit. Operating below the min may cause problems with coil freeze-up.

Airflow:

All units are draw-though in cooling mode.

Outdoor air application strategies:

Economizers reduce operating expenses and compressor run time by providing a free source of cooling and a means of ventilation to match application changing needs. In fact, they should be considered for most applications. Also, consider the various economizer control methods and their benefits, as well as sensors required to accomplish your application goals. Please contact your local Carrier representative for assistance.

Motor limits, break horsepower (BHP):

Due to Carrier's internal unit design, air path, and specially designed motors, the full horsepower (maximum continuous BHP) band, as listed in Table 5, can be used with the utmost confidence. There is no need for extra safety factors, as Carrier's motors are designed and rigorously tested to use the entire, listed BHP range without either nuisance tripping or premature motor failure.

Sizing a rooftop

Bigger isn't necessarily better. While an air conditioner needs to have enough capacity to meet the load, it doesn't need excess capacity. In fact, having excess capacity typically results in very poor part load performance and humidity control.

Using higher design temperatures than ASHRAE recommends for your location, adding "safety factors" to the calculated load, and rounding up to the next largest unit, are all signs of oversizing air conditioners. Oversizing can cause short-cycling, and short cycling leads to poor humidity control, reduced efficiency, higher utility bills, drastic indoor temperature swings, excessive noise, and increased wear and tear on the air conditioner.

Rather than oversizing an air conditioner, wise contractors and engineers "right-size" or even slightly undersize air conditioners. Correctly sizing an air conditioner controls humidity better; promotes efficiency; reduces utility bills; extends equipment life, and maintains even, comfortable temperatures.

Low ambient applications

When equipped with a Carrier economizer, your rooftop unit can cool your space by bringing in fresh, cool outside air. In fact, when so equipped, accessory low-ambient kit may not be necessary. In low ambient conditions, unless the outdoor air is excessively humid or contaminated, economizer-based "free cooling" is the preferred less costly and energy conscious method.

In low ambient applications where outside air might not be desired (such as contaminated or excessively humid outdoor environments), your Carrier rooftop can operate to ambient temperatures down to -29°C (-20°F) using the recommended accessory Motormaster low ambient controller.

Winter start

Carrier's winter start kit extends the low ambient limit of your rooftop to -4°C (25°F). The kit bypasses the low pressure switch, preventing nuisance tripping of the low pressure switch. Other low ambient precautions may still be prudent.

Table 9 – COOLING CAPACITIES (kW) 1-STAGE COOLING SI

50TC – A07				AMBIENT TEMPERATURE °C															
				29			35			41			46			52			
				EAT (db)			EAT (db)			EAT (db)			EAT (db)			EAT (db)			
				24	27	29	24	27	29	24	27	29	24	27	29	24	27	29	
708 L/s	EAT (wb)	14	THC	15.5	15.5	17.6	14.6	14.6	16.6	13.7	13.7	15.5	12.6	12.6	14.3	12.6	12.6	14.2	
			SHC	13.4	15.5	17.6	12.7	14.6	16.6	11.8	13.7	15.5	10.9	12.6	14.3	11.0	12.6	14.2	
			kW	3.7			4.2			4.7			5.3			5.6			
		17	THC	16.5	16.5	16.9	15.3	15.3	16.3	14.0	14.0	15.7	12.7	12.7	14.9	12.6	12.6	14.8	
			SHC	12.2	14.6	16.9	11.7	14.0	16.3	11.1	13.4	15.7	10.4	12.7	14.9	10.5	12.6	14.8	
			kW	3.8			4.2			4.7			5.3			5.6			
		19	THC	18.3	18.3	18.3	17.2	17.2	17.2	15.9	15.9	15.9	14.5	14.5	14.5	14.0	14.0	14.0	
			SHC	10.2	12.5	14.9	9.7	12.1	14.4	9.2	11.5	13.9	8.6	10.9	13.3	8.5	10.8	13.0	
			kW	3.9			4.4			4.9			5.5			5.6			
		22	THC	20.0	20.0	20.0	19.0	19.0	19.0	17.8	17.8	17.8	16.5	16.5	16.5	15.0	15.0	15.0	
			SHC	8.0	10.3	12.7	7.6	9.9	12.3	7.1	9.5	11.8	6.6	9.0	11.3	6.2	8.3	10.4	
			kW	4.0			4.5			5.0			5.6			5.6			
		24	THC	–	20.8	20.8	–	20.2	20.2	–	19.2	19.2	–	17.8	17.8	–	15.5	15.5	
			SHC	–	8.3	10.7	–	8.1	10.5	–	7.7	10.1	–	7.3	9.7	–	6.5	8.9	
			kW	4.0			4.5			5.1			5.6			5.7			
826 L/s	EAT (wb	14	THC	16.6	16.6	18.8	15.6	15.6	17.7	14.6	14.6	16.6	13.5	13.5	15.3	13.3	13.3	15.0	
			SHC	14.3	16.6	18.8	13.5	15.6	17.7	12.6	14.6	16.6	11.7	13.5	15.3	11.6	13.3	15.0	
			kW	3.8			4.3			4.5			5.4			5.6			
		17	THC	17.1	17.1	18.6	15.9	15.9	18.0	14.6	14.6	17.3	13.5	13.5	15.9	13.3	13.3	15.6	
			SHC	13.2	15.9	18.6	12.7	15.3	18.0	12.0	14.6	17.3	11.1	13.5	15.9	11.0	13.3	15.6	
			kW	3.9			4.3			4.8			5.4			5.6			
		19	THC	18.8	18.8	18.8	17.7	17.7	17.7	16.5	16.5	16.5	15.0	15.0	15.0	14.2	14.2	14.2	
			SHC	10.8	13.5	16.2	10.3	13.0	15.7	9.8	12.5	15.2	9.3	12.0	14.6	9.1	11.6	14.2	
			kW	3.9			4.4			5.0			5.5			5.6			
		22	THC	20.4	20.4	20.4	19.5	19.5	19.5	18.3	18.3	18.3	16.9	16.9	16.9	15.1	15.1	15.1	
			SHC	8.1	10.8	13.4	7.8	10.5	13.2	7.4	10.1	12.8	6.9	9.6	12.3	6.3	8.7	11.0	
			kW	4.0			4.5			5.0			5.6			5.7			
		24	THC	–	21.2	21.2	–	20.5	20.5	–	19.5	19.5	–	–	–	–	15.6	15.6	
			SHC	–	8.6	11.4	–	8.4	11.2	–	8.0	10.8	–	–	–	–	6.7	9.3	
			kW	4.0			4.5			5.1			5.7			5.7			
944 L/s	EAT (wb)	14	THC	17.4	17.4	19.7	16.4	16.4	18.6	15.4	15.4	17.4	14.2	14.2	16.1	13.8	13.8	15.6	
			SHC	15.1	17.4	19.7	14.2	16.4	18.6	13.3	15.4	17.4	12.3	14.2	16.1	12.0	13.8	15.6	
			kW	3.9			4.4			4.9			5.4			5.6			
		17	THC	17.6	17.6	20.1	16.5	16.5	19.4	15.4	15.4	18.2	14.3	14.3	16.8	13.8	13.8	16.2	
			SHC	14.1	17.1	20.1	13.5	16.5	19.4	12.6	15.4	18.2	11.7	14.3	16.8	11.5	13.8	16.2	
			kW	3.9			4.4			4.9			5.4			5.6			
		19	THC	19.2	19.2	19.2	18.1	18.1	18.1	16.8	16.8	16.8	15.4	15.4	15.9	14.4	14.4	15.1	
			SHC	11.4	14.4	17.4	10.9	14.0	17.0	10.4	13.5	16.5	9.8	12.9	15.9	9.5	12.3	15.1	
			kW	3.9			4.4			5.0			5.6			5.6			
		22	THC	20.5	20.5	20.5	19.8	19.8	19.8	18.6	18.6	18.6	17.3	17.3	17.3	15.2	15.2	15.2	
			SHC	8.3	11.2	14.1	8.0	11.0	14.1	7.6	10.7	13.7	7.1	10.2	13.2	6.4	9.0	11.6	
			kW	4.0			4.5			5.0			5.6			5.7			
		24	THC	–	21.4	21.4	–	20.7	20.7	–	19.7	19.7	–	–	–	–	15.7	15.7	
			SHC	–	8.8	11.9	–	8.6	11.7	–	8.3	11.3	–	–	–	–	6.8	9.6	
			kW	4.0			4.6			5.1			5.7			5.7			
1062 L/s	EAT (wb)	14	THC	18.0	18.0	20.5	17.1	17.1	19.4	16.1	16.1	18.2	14.9	14.9	16.9	14.2	14.2	16.0	
			SHC	15.6	18.0	20.5	14.8	17.1	19.4	13.9	16.1	18.2	12.9	14.9	16.9	12.3	14.2	16.0	
			kW	3.9			4.4			4.9			5.5			5.6			
		17	THC	18.0	18.0	21.3	17.1	17.1	20.2	16.1	16.1	18.9	14.9	14.9	17.6	14.2	14.2	16.6	
			SHC	14.8	18.0	21.3	14.0	17.1	20.2	13.2	16.1	18.9	12.2	14.9	17.6	11.8	14.2	16.6	
			kW	3.9			4.4			4.9			5.5			5.6			
		19	THC	19.6	19.6	19.6	18.5	18.5	18.5	17.1	17.1	17.8	15.7	15.7	17.2	14.5	14.5	16.0	
			SHC	11.9	15.2	18.6	11.5	14.9	18.3	11.0	14.4	17.8	10.4	13.8	17.2	9.9	12.9	16.0	
			kW	3.9			4.4			5.0			5.6			5.6			
		22	THC	20.7	20.7	20.7	20.1	20.1	20.1	18.9	18.9	18.9	17.5	17.5	17.5	15.3	15.3	15.3	
			SHC	8.4	11.6	14.7	8.2	11.5	14.8	7.8	11.2	14.5	7.3	10.7	14.1	6.5	9.3	12.0	
			kW	4.0			4.5			5.0			5.6			5.7			
		24	THC	–	21.5	21.5	–	20.9	20.9	–	19.9	19.9	–	–	–	–	15.7	15.7	
			SHC	–	9.0	12.3	–	8.8	12.1	–	8.5	11.8	–	–	–	–	7.0	9.9	
			kW	4.1			4.6			5.1			5.7			5.7			
1180 L/s	EAT (wb)	14	THC	18.5	18.5	21.0	17.6	17.6	20.0	16.6	16.6	18.8	15.4	15.4	17.5	14.4	14.4	16.3	
			SHC	16.1	18.5	21.0	15.3	17.6	20.0	14.4	16.6	18.8	13.3	15.4	17.5	12.6	14.4	16.3	
			kW	3.9			4.4			5.0			5.6			5.6			
		17	THC	18.6	18.6	21.9	17.6	17.6	20.8	16.6	16.6	19.5	15.4	15.4	18.2	14.4	14.4	16.9	
			SHC	15.2	18.6	21.9	14.5	17.6	20.8	13.6	16.6	19.5	12.7	15.4	18.2	12.0	14.4	16.9	
			kW	3.9			4.4			5.0			5.6			5.6			
		19	THC	19.8	19.8	19.8	18.7	18.7	19.4	17.4	17.4	18.9	15.9	15.9	18.3	14.6	14.6	16.7	
			SHC	12.3	16.0	19.7	12.0	15.7	19.4	11.5	15.2	18.9	10.9	14.6	18.3	10.2	13.5	16.7	
			kW	4.0			4.4			5.0			5.6			5.6			
		22	THC	20.9	20.9	20.9	20.2	20.2	20.2	19.1	19.1	19.1	17.7	17.7	17.7	15.4	15.4	15.4	
			SHC	8.5	11.9	15.3	8.4	11.9	15.5	8.0	11.6	15.3	7.5	11.2	14.9	6.6	9.5	12.5	
			kW	4.0			4.5			5.1			5.6			5.7			
		24	THC	–	21.6	21.6	–	20.9	20.9	–	20.0	20.0	–	–	–	–	15.8	15.8	
			SHC	–	9.1	12.7	–	8.9	12.5	–	8.7	12.3	–	–	–	–	7.1	10.1	
			kW	4.1			4.6			5.1			5.7			5.7			

LEGEND:

– = Do not operate
Cfm = Cubic feet per minute (supply air)
EAT(db) = Entering air temperature (dry bulb)
EAT(wb) = Entering air temperature (wet bulb)
kW = Compressor kilowatts
L/s = Liters per second
SHC = Sensible heat capacity (Gross)
THC = Total heat capacity (Gross)

Table 10 – COOLING CAPACITIES (MBH) 1-STAGE COOLING ENGLISH

50TC – A07				AMBIENT TEMPERATURE °F													
				85			95			105			115			125		
				EAT (db)			EAT (db0			EAT (db)			EAT (db)			EAT (db)		
				75	80	85	75	80	85	75	80	85	75	80	85	75	80	85
1500 Cfm	EAT (wb)	58	THC	52.9	52.9	60.0	49.9	49.9	56.6	46.6	46.6	52.9	43.1	43.1	48.9	43.1	43.1	48.6
			SHC	45.8	52.9	60.0	43.2	49.9	56.6	40.4	46.6	52.9	37.3	43.1	48.9	37.6	43.1	48.6
			kW		3.7			4.2			4.7			5.3			5.6	
		62	THC	56.2	56.2	57.6	52.2	52.2	55.7	47.8	47.8	53.5	43.2	43.2	51.0	43.1	43.1	50.5
			SHC	41.8	49.7	57.6	39.9	47.8	55.7	37.8	45.6	53.5	35.5	43.2	51.0	35.7	43.1	50.5
			kW		3.8			4.2			4.7			5.3			5.6	
		67	THC	62.4	62.4	62.4	58.8	58.8	58.8	54.4	54.4	54.4	49.5	49.5	49.5	47.6	47.6	47.6
			SHC	34.8	42.8	50.7	33.2	41.2	49.1	31.4	39.3	47.3	29.4	37.3	45.3	29.2	36.7	44.4
			kW		3.9			4.4			4.9			5.5			5.6	
		72	THC	68.2	68.2	68.2	64.8	64.8	64.8	60.8	60.8	60.8	56.2	56.2	56.2	51.1	51.1	51.1
			SHC	27.2	35.2	43.2	25.9	33.9	41.9	24.4	32.4	40.4	22.6	30.6	38.6	21.1	28.4	35.7
			kW		4.0			4.5			5.0			5.6			5.6	
		76	THC	–	71.1	71.1	–	69.0	69.0	–	65.4	65.4	–	60.9	60.9	–	52.9	52.9
			SHC	–	28.4	36.6	–	27.6	35.9	–	26.3	34.6	–	24.8	33.0	–	22.2	30.2
			kW		4.0			4.5			5.1			5.6			5.7	
1750 Cfm	EAT (wb)	58	THC	56.5	56.5	64.0	53.3	53.3	60.4	49.8	49.8	56.5	46.1	46.1	52.3	45.4	45.4	51.1
			SHC	48.9	56.5	64.0	46.1	53.3	60.4	43.1	49.8	56.5	39.9	46.1	52.3	39.6	45.4	51.1
			kW		3.8			4.3			4.5			5.4			5.6	
		62	THC	58.5	58.5	63.4	54.4	54.4	61.3	49.9	49.9	58.9	46.1	46.1	54.4	45.4	45.4	53.1
			SHC	45.2	54.3	63.4	43.2	52.2	61.3	41.0	49.9	58.9	37.9	46.1	54.4	37.7	45.4	53.1
			kW		3.9			4.3			4.8			5.4			5.6	
		67	THC	64.3	64.3	64.3	60.5	60.5	60.5	56.2	56.2	56.2	51.3	51.3	51.3	48.6	48.6	48.6
			SHC	36.9	46.1	55.2	35.3	44.5	53.7	33.6	42.8	51.9	31.6	40.8	49.9	30.9	39.6	48.3
			kW		3.9			4.4			5.0			5.5			5.6	
		72	THC	69.5	69.5	69.5	66.5	66.5	66.5	62.4	62.4	62.4	57.7	57.7	57.7	51.6	51.6	51.6
			SHC	27.8	36.9	45.9	26.7	35.9	45.1	25.2	34.5	43.7	23.5	32.8	42.0	21.5	29.6	37.7
			kW		4.0			4.5			5.0			5.6			5.7	
		76	THC	–	72.2	72.2	–	70.1	70.1	–	66.6	66.6	–	–	–	–	53.2	53.2
			SHC	–	29.3	38.9	–	28.6	38.2	–	27.4	36.8	–	–	–	–	22.8	31.6
			kW		4.0			4.5			5.1			5.7			5.7	
2000 Cfm	EAT (wb)	58	THC	59.3	59.3	67.3	56.1	56.1	63.6	52.5	52.5	59.5	48.6	48.6	55.1	47.1	47.1	53.1
			SHC	51.4	59.3	67.3	48.6	56.1	63.6	45.4	52.5	59.5	42.1	48.6	55.1	41.1	47.1	53.1
			kW		3.9			4.4			4.9			5.5			5.6	
		62	THC	60.1	60.1	68.5	56.2	56.2	66.3	52.5	52.5	62.0	48.7	48.7	57.4	47.1	47.1	55.2
			SHC	48.1	58.3	68.5	46.2	56.2	66.3	43.1	52.5	62.0	39.9	48.7	57.4	39.2	47.1	55.2
			kW		3.9			4.4			4.9			5.4			5.6	
		67	THC	65.7	65.7	65.7	61.9	61.9	61.9	57.5	57.5	57.5	52.6	52.6	54.4	49.2	49.2	51.6
			SHC	38.8	49.1	59.5	37.3	47.7	58.1	35.6	46.0	56.4	33.6	44.0	54.4	32.4	42.1	51.6
			kW		3.9			4.4			5.0			5.6			5.6	
		72	THC	70.1	70.1	70.1	67.6	67.6	67.6	63.6	63.6	63.6	58.9	58.9	58.9	52.0	52.0	52.0
			SHC	28.3	38.1	48.0	27.4	37.7	48.0	26.0	36.4	46.7	24.3	34.7	45.2	21.9	30.7	39.5
			kW		4.0			4.5			5.0			5.6			5.7	
		76	THC	–	72.9	72.9	–	70.8	70.8	–	67.4	67.4	–	–	–	–	53.6	53.6
			SHC	–	30.1	40.7	–	29.3	39.9	–	28.2	38.7	–	–	–	–	23.3	32.7
			kW		4.0			4.6			5.1			5.7			5.7	
2250 Cfm	EAT (wb)	58	THC	61.5	61.5	69.8	58.4	58.4	66.2	54.8	54.8	62.1	50.8	50.8	57.6	48.4	48.4	54.6
			SHC	53.2	61.5	69.8	50.5	58.4	66.2	47.4	54.8	62.1	43.9	50.8	57.6	42.1	48.4	54.6
			kW		3.9			4.4			4.9			5.5			5.6	
		62	THC	61.6	61.6	72.6	58.4	58.4	68.9	54.8	54.8	64.6	50.8	50.8	59.9	48.4	48.4	56.6
			SHC	50.6	61.6	72.6	47.9	58.4	68.9	45.0	54.8	64.6	41.7	50.8	59.9	40.2	48.4	56.6
			kW		3.9			4.4			4.9			5.5			5.6	
		67	THC	66.8	66.8	66.8	63.0	63.0	63.0	58.5	58.5	60.6	53.6	53.6	58.6	49.6	49.6	54.6
			SHC	40.5	52.0	63.4	39.1	50.7	62.3	37.4	49.0	60.6	35.5	47.0	58.6	33.7	44.1	54.6
			kW		3.9			4.4			5.0			5.6			5.6	
		72	THC	70.8	70.8	70.8	68.5	68.5	68.5	64.5	64.5	64.5	59.8	59.8	59.8	52.2	52.2	52.2
			SHC	28.7	39.5	50.2	28.0	39.3	50.5	26.7	38.1	49.6	25.0	36.6	48.1	22.3	31.7	41.1
			kW		4.0			4.5			5.0			5.6			5.7	
		76	THC	–	73.4	73.4	–	71.2	71.2	–	67.9	67.9	–	–	–	–	53.7	53.7
			SHC	–	30.7	42.1	–	30.0	41.4	–	28.9	40.4	–	–	–	–	23.7	33.7
			kW		4.1			4.6			5.1			5.7			5.7	
2500 Cfm	EAT (wb)	58	THC	63.3	63.3	71.8	60.1	60.1	68.2	56.5	56.5	64.1	52.6	52.6	59.6	49.2	49.2	55.5
			SHC	54.8	63.3	71.8	52.1	60.1	68.2	49.0	56.5	64.1	45.5	52.6	59.6	42.9	49.2	55.5
			kW		3.9			4.4			5.0			5.6			5.6	
		62	THC	63.4	63.4	74.7	60.2	60.2	71.0	56.6	56.6	66.7	52.6	52.6	62.1	49.2	49.2	57.6
			SHC	52.0	63.4	74.7	49.4	60.2	71.0	46.5	56.6	66.7	43.2	52.6	62.1	40.8	49.2	57.6
			kW		3.9			4.4			5.0			5.6			5.6	
		67	THC	67.6	67.6	67.6	63.8	63.8	66.2	59.3	59.3	64.6	54.4	54.4	62.5	49.9	49.9	57.1
			SHC	42.1	54.6	67.1	40.9	53.5	66.2	39.2	51.9	64.6	37.2	49.8	62.5	34.8	46.0	57.1
			kW		4.0			4.4			5.0			5.6			5.6	
		72	THC	71.3	71.3	71.3	69.0	69.0	69.0	65.1	65.1	65.1	60.4	60.4	60.4	52.5	52.5	52.5
			SHC	29.1	40.7	52.2	28.5	40.7	52.9	27.3	39.7	52.2	25.7	38.3	50.9	22.7	32.6	42.6
			kW		4.0			4.5			5.1			5.6			5.7	
		76	THC	–	73.8	73.8	–	71.4	71.4	–	68.3	68.3	–	–	–	–	53.9	53.9
			SHC	–	31.2	43.3	–	30.5	42.6	–	29.6	41.9	–	–	–	–	24.2	34.6
			kW		4.1			4.6			5.1			5.7			5.7	

LEGEND:

– = Do not operate
Cfm = Cubic feet per minute (supply air)
EAT(db) = Entering air temperature (dry bulb)
EAT(wb) = Entering air temperature (wet bulb)
kW = Compressor kilowatts
L/s = Liters per second
SHC = Sensible heat capacity (Gross) (Gross)
THC = Total heat capacity (Gross)

Table 11 – COOLING CAPACITIES (kW) 2-STAGE COOLING SI

50TC – D08				AMBIENT TEMPERATURE °C													
				29			35			41			46			52		
				EAT (db)			EAT (db)			EAT (db)			EAT (db)			EAT (db)		
				24	27	29	24	27	29	24	27	29	24	27	29	24	27	29
849 L/s	EAT (wb)	14	THC	18.6	18.6	21.0	17.5	17.5	19.8	16.3	16.3	18.4	15.1	15.1	17.0	13.7	13.7	15
			SHC	16.2	18.6	21.0	15.3	17.5	19.8	14.2	16.3	18.4	13.1	15.1	17.0	12.0	13.7	15
			kW	4.1			4.6			5.2			5.8			6.6		
		17	THC	19.7	19.7	20.4	18.3	18.3	19.6	16.6	16.6	18.8	15.1	15.1	17.7	13.7	13.7	16
			SHC	14.9	17.6	20.4	14.2	16.9	19.6	13.4	16.1	18.8	12.5	15.1	17.7	11.4	13.7	16
			kW	4.1			4.6			5.2			5.8			6.6		
		19	THC	22.2	22.2	22.2	20.7	20.7	20.7	19.1	19.1	19.1	17.2	17.2	17.2	15.3	15.3	15
			SHC	12.6	15.3	18.0	11.9	14.6	17.4	11.2	13.9	16.7	10.5	13.2	15.9	9.7	12.4	15
			kW	4.2			4.8			5.3			6.0			6.7		
		22	THC	24.5	24.5	24.5	23.3	23.3	23.3	21.7	21.7	21.7	19.9	19.9	19.9	18.0	18.0	18
			SHC	9.9	12.6	15.3	9.5	12.2	14.9	8.8	11.6	14.3	8.1	10.9	13.7	7.4	10.2	13
			kW	4.2			4.8			5.4			6.1			6.9		
		24	THC	–	25.5	25.5	–	24.9	24.9	–	23.6	23.6	–	22.0	22.0	–	20.1	20
			SHC	–	10.2	13.1	–	10.0	12.9	–	9.6	12.4	–	8.9	11.8	–	8.3	11
			kW	4.3			4.8			5.5			6.2			6.9		
991 L/s	EAT (wb)	14	THC	19.9	19.9	22.4	18.7	18.7	21.1	17.4	17.4	19.7	16.1	16.1	18.1	14.7	14.7	17
			SHC	17.3	19.9	22.4	16.3	18.7	21.1	15.2	17.4	19.7	14.0	16.1	18.1	12.8	14.7	17
			kW	4.1			4.6			5.2			5.9			6.7		
		17	THC	20.5	20.5	22.4	19.0	19.0	21.6	17.5	17.5	20.5	16.1	16.1	18.9	14.7	14.7	17
			SHC	16.1	19.2	22.4	15.4	18.5	21.6	14.5	17.5	20.5	13.3	16.1	18.9	12.2	14.7	17
			kW	4.2			4.7			5.2			5.9			6.7		
		19	THC	23.1	23.1	23.1	21.5	21.5	21.5	19.8	19.8	19.8	17.8	17.8	17.8	15.9	15.9	17
			SHC	13.4	16.5	19.6	12.7	15.9	19.0	12.0	15.2	18.3	11.3	14.4	17.6	10.5	13.6	17
			kW	4.2			4.8			5.4			6.0			6.7		
		22	THC	24.9	24.9	24.9	24.0	24.0	24.0	22.4	22.4	22.4	20.6	20.6	20.6	18.6	18.6	19
			SHC	10.1	13.1	16.1	9.8	12.9	16.0	9.2	12.4	15.5	8.6	11.7	14.9	7.8	11.0	14
			kW	4.3			4.8			5.4			6.1			6.9		
		24	THC	–	25.9	25.9	–	25.2	25.2	–	24.1	24.1	–	22.5	22.5	–	20.6	21
			SHC	–	10.6	13.9	–	10.3	13.7	–	9.9	13.2	–	9.3	12.6	–	8.7	12
			kW	4.3			4.9			5.5			6.2			7.0		
1133 L/s	EAT (wb)	14	THC	20.9	20.9	23.6	19.7	19.7	22.3	18.4	18.4	20.7	17.0	17.0	19.1	15.5	15.5	17
			SHC	18.3	20.9	23.6	17.2	19.7	22.3	16.0	18.4	20.7	14.8	17.0	19.1	13.5	15.5	17
			kW	4.2			4.7			5.3			6.0			6.7		
		17	THC	21.3	21.3	24.2	19.7	19.7	23.1	18.4	18.4	21.6	17.0	17.0	19.9	15.5	15.5	18
			SHC	17.3	20.7	24.2	16.4	19.7	23.1	15.3	18.4	21.6	14.1	17.0	19.9	12.9	15.5	18
			kW	4.2			4.7			5.3			6.0			6.7		
		19	THC	23.7	23.7	23.7	22.1	22.1	22.1	20.3	20.3	20.3	18.3	18.3	19.1	16.3	16.3	18
			SHC	14.1	17.6	21.1	13.5	17.1	20.6	12.8	16.3	19.9	12.0	15.6	19.1	11.2	14.7	18
			kW	4.2			4.8			5.4			6.1			6.8		
		22	THC	25.2	25.2	25.2	24.4	24.4	24.4	22.9	22.9	22.9	21.1	21.1	21.1	19.0	19.0	19
			SHC	10.3	13.6	16.9	10.0	13.5	17.0	9.5	13.1	16.6	8.9	12.4	16.0	8.2	11.7	15
			kW	4.3			4.8			5.4			6.2			6.9		
		24	THC	–	26.2	26.2	–	25.4	25.4	–	24.4	24.4	–	22.9	22.9	–	21.0	21
			SHC	–	10.8	14.5	–	10.5	14.2	–	10.2	13.8	–	9.7	13.3	–	9.1	13
			kW	4.3			4.9			5.5			6.2			7.0		
1274 L/s	EAT (wb)	14	THC	21.9	21.9	24.7	20.6	20.6	23.2	19.2	19.2	21.7	17.7	17.7	20.0	16.2	16.2	18
			SHC	19.0	21.9	24.7	18.0	20.6	23.2	16.8	19.2	21.7	15.5	17.7	20.0	14.1	16.2	18
			kW	4.2			4.8			5.3			6.0			6.8		
		17	THC	21.9	21.9	25.7	20.6	20.6	24.2	19.2	19.2	22.5	17.8	17.8	20.8	16.2	16.2	19
			SHC	18.2	21.9	25.7	17.1	20.6	24.2	15.9	19.2	22.5	14.7	17.8	20.8	13.4	16.2	19
			kW	4.2			4.8			5.3			6.0			6.8		
		19	THC	24.1	24.1	24.1	22.6	22.6	22.6	20.7	20.7	21.4	18.8	18.8	20.6	16.7	16.7	20
			SHC	14.6	18.5	22.3	14.2	18.1	22.0	13.5	17.4	21.4	12.7	16.6	20.6	11.8	15.8	20
			kW	4.2			4.8			5.4			6.1			6.8		
		22	THC	25.4	25.4	25.4	24.7	24.7	24.7	23.3	23.3	23.3	21.5	21.5	21.5	19.4	19.4	19
			SHC	10.5	14.0	17.6	10.3	14.0	17.8	9.8	13.7	17.6	9.2	13.1	17.1	8.5	12.4	16
			kW	4.3			4.8			5.5			6.2			6.9		
		24	THC	–	26.4	26.4	–	25.5	25.5	–	24.7	24.7	–	23.1	23.1	–	21.3	21
			SHC	–	11.0	14.9	–	10.7	14.6	–	10.5	14.4	–	10.0	13.9	–	9.4	13
			kW	4.3			4.9			5.5			6.2			7.0		
1416 L/s	EAT (wb)	14	THC	22.6	22.6	25.5	21.4	21.4	24.1	19.9	19.9	22.5	18.4	18.4	20.8	16.8	16.8	19
			SHC	19.7	22.6	25.5	18.6	21.4	24.1	17.4	19.9	22.5	16.1	18.4	20.8	14.6	16.8	19
			kW	4.2			4.8			5.4			6.1			6.8		
		17	THC	22.6	22.6	26.5	21.4	21.4	25.1	20.0	20.0	23.4	18.4	18.4	21.6	16.8	16.8	20
			SHC	18.8	22.6	26.5	17.7	21.4	25.1	16.6	20.0	23.4	15.3	18.4	21.6	13.9	16.8	20
			kW	4.2			4.8			5.4			6.1			6.8		
		19	THC	24.3	24.3	24.3	22.9	22.9	23.4	21.1	21.1	22.8	19.1	19.1	21.9	17.0	17.0	21
			SHC	15.2	19.3	23.4	14.8	19.1	23.4	14.2	18.5	22.8	13.3	17.6	21.9	12.5	16.7	21
			kW	4.2			4.8			5.4			6.1			6.8		
		22	THC	25.6	25.6	25.6	24.9	24.9	24.9	23.6	23.6	23.6	21.8	21.8	21.8	19.7	19.7	20
			SHC	10.6	14.4	18.2	10.4	14.5	18.5	10.0	14.2	18.5	9.4	13.7	18.0	8.7	13.1	17
			kW	4.3			4.8			5.5			6.2			6.9		
		24	THC	–	26.5	26.5	–	25.6	25.6	–	24.8	24.8	–	23.4	23.4	–	21.5	21
			SHC	–	11.2	15.4	–	10.9	15.0	–	10.7	14.9	–	10.3	14.5	–	9.7	14
			kW	4.3			4.9			5.5			6.2			7.0		

LEGEND:

– = Do not operate
Cfm = Cubic feet per minute (supply air)
EAT(db) = Entering air temperature (dry bulb)
EAT(wb) = Entering air temperature (wet bulb)
kW = Compressor kilowatts
L/s = Liters per second
SHC = Sensible heat capacity (Gross)
THC = Total heat capacity (Gross)

Table 12 – COOLING CAPACITIES (MBH) 2-STAGE COOLING ENGLISH

50TC – D08				AMBIENT TEMPERATURE °F													
				85			95			105			115			125		
				EAT (db)			EAT (db)			EAT (db)			EAT (db)			EAT (db)		
				75	80	85	75	80	85	75	80	85	75	80	85	75	80	85
1800 Cfm	EAT (wb)	58	THC	63.6	63.6	71.7	59.8	59.8	67.5	55.7	55.7	62.8	51.4	51.4	57.9	46.8	46.8	52.8
			SHC	55.4	63.6	71.7	52.1	59.8	67.5	48.5	55.7	62.8	44.8	51.4	57.9	40.8	46.8	52.8
			kW		4.1			4.6			5.2			5.8			6.6	
		62	THC	67.3	67.3	69.5	62.3	62.3	67	56.8	56.8	64.2	51.5	51.5	60.3	46.9	46.9	54.9
			SHC	50.9	60.2	69.5	48.5	57.7	67	45.8	55	64.2	42.7	51.5	60.3	38.9	46.9	54.9
			kW		4.1			4.6			5.2			5.8			6.6	
		67	THC	75.9	75.9	75.9	70.8	70.8	70.8	65.1	65.1	65.1	58.8	58.8	58.8	52.2	52.2	52.2
			SHC	42.9	52.2	61.4	40.7	50	59.3	38.3	47.6	56.9	35.7	45	54.3	33.1	42.4	51.7
			kW		4.2			4.8			5.3			6.0			6.7	
		72	THC	83.6	83.6	83.6	79.6	79.6	79.6	74.2	74.2	74.2	68	68	68	61.3	61.3	61.3
			SHC	33.8	43.1	52.3	32.3	41.6	50.9	30.2	39.5	48.9	27.8	37.2	46.6	25.4	34.7	44.1
			kW		4.2			4.8			5.4			6.1			6.9	
		76	THC	–	87.1	87.1	–	84.9	84.9	–	80.6	80.6	–	75	75	–	68.6	68.6
			SHC	–	34.8	44.7	–	34	43.9	–	32.6	42.4	–	30.5	40.2	–	28.3	37.8
			kW		4.3			4.8			5.5			6.2			6.9	
2100 Cfm	EAT (wb)	58	THC	67.8	67.8	76.5	63.9	63.9	72	59.5	59.5	67.2	54.9	54.9	61.9	50.1	50.1	56.5
			SHC	59.1	67.8	76.5	55.7	63.9	72	51.9	59.5	67.2	47.8	54.9	61.9	43.6	50.1	56.5
			kW		4.1			4.6			5.2			5.9			6.7	
		62	THC	70.1	70.1	76.4	64.9	64.9	73.6	59.6	59.6	69.8	54.9	54.9	64.4	50.1	50.1	58.7
			SHC	55.1	65.7	76.4	52.5	63.1	73.6	49.4	59.6	69.8	45.5	54.9	64.4	41.6	50.1	58.7
			kW		4.2			4.7			5.2			5.9			6.7	
		67	THC	78.8	78.8	78.8	73.4	73.4	73.4	67.5	67.5	67.5	60.9	60.9	60.9	54.1	54.1	57.2
			SHC	45.6	56.3	67	43.5	54.2	65	41.1	51.8	62.6	38.4	49.2	59.9	35.7	46.5	57.2
			kW		4.2			4.8			5.4			6.0			6.7	
		72	THC	84.9	84.9	84.9	81.9	81.9	81.9	76.6	76.6	76.6	70.3	70.3	70.3	63.4	63.4	63.4
			SHC	34.5	44.8	55.1	33.4	44.1	54.7	31.4	42.2	53	29.2	39.9	50.7	26.7	37.5	48.3
			kW		4.3			4.8			5.4			6.1			6.9	
		76	THC	–	88.5	88.5	–	86.1	86.1	–	82.3	82.3	–	76.9	76.9	–	70.4	70.4
			SHC	–	36.1	47.6	–	35.2	46.7	–	33.8	45	–	31.9	43	–	29.7	40.7
			kW		4.3			4.9			5.5			6.2			7.0	
2400 Cfm	EAT (wb)	58	THC	71.5	71.5	80.7	67.3	67.3	76	62.8	62.8	70.8	57.9	57.9	65.3	52.9	52.9	59.6
			SHC	62.3	71.5	80.7	58.7	67.3	76	54.7	62.8	70.8	50.5	57.9	65.3	46.1	52.9	59.6
			kW		4.2			4.7			5.3			6.0			6.7	
		62	THC	72.6	72.6	82.6	67.4	67.4	79	62.9	62.9	73.6	58	58	67.9	52.9	52.9	62
			SHC	58.9	70.8	82.6	55.9	67.4	79	52.1	62.9	73.6	48	58	67.9	43.9	52.9	62
			kW		4.2			4.7			5.3			6.0			6.7	
		67	THC	80.8	80.8	80.8	75.5	75.5	75.5	69.3	69.3	69.3	62.6	62.6	65.3	55.6	55.6	62.3
			SHC	48	59.9	71.9	46.1	58.2	70.3	43.6	55.8	67.9	41	53.1	65.3	38.2	50.2	62.3
			kW		4.2			4.8			5.4			6.1			6.8	
		72	THC	86	86	86	83.4	83.4	83.4	78.3	78.3	78.3	72	72	72	65	65	65
			SHC	35.1	46.4	57.8	34.3	46.1	58	32.5	44.6	56.6	30.3	42.4	54.6	27.9	40	52.2
			kW		4.3			4.8			5.4			6.2			6.9	
		76	THC	–	89.4	89.4	–	86.8	86.8	–	83.4	83.4	–	78.1	78.1	–	71.7	71.7
			SHC	–	37	49.6	–	36	48.4	–	34.8	47.2	–	33.1	45.4	–	31	43.2
			kW		4.3			4.9			5.5			6.2			7.0	
2700 Cfm	EAT (wb)	58	THC	74.6	74.6	84.2	70.3	70.3	79.3	65.6	65.6	74	60.5	60.5	68.3	55.3	55.3	62.3
			SHC	65	74.6	84.2	61.3	70.3	79.3	57.2	65.6	74	52.8	60.5	68.3	48.2	55.3	62.3
			kW		4.2			4.8			5.3			6.0			6.8	
		62	THC	74.8	74.8	87.6	70.4	70.4	82.5	65.7	65.7	76.9	60.6	60.6	71	55.3	55.3	64.8
			SHC	62	74.8	87.6	58.4	70.4	82.5	54.4	65.7	76.9	50.2	60.6	71	45.9	55.3	64.8
			kW		4.2			4.8			5.3			6.0			6.8	
		67	THC	82.2	82.2	82.2	77.1	77.1	77.1	70.8	70.8	73	64	64	70.2	56.9	56.9	67.1
			SHC	50	63.1	76.2	48.4	61.8	75.2	46	59.5	73	43.3	56.8	70.2	40.4	53.8	67.1
			kW		4.2			4.8			5.4			6.1			6.8	
		72	THC	86.8	86.8	86.8	84.4	84.4	84.4	79.6	79.6	79.6	73.3	73.3	73.3	66.3	66.3	66.3
			SHC	35.7	47.9	60.1	35	47.9	60.8	33.4	46.7	59.9	31.3	44.7	58.2	28.9	42.4	55.9
			kW		4.3			4.8			5.5			6.2			6.9	
		76	THC	–	90	90	–	87.1	87.1	–	84.2	84.2	–	79	79	–	72.7	72.7
			SHC	–	37.7	51	–	36.6	49.9	–	35.7	49.1	–	34.1	47.5	–	32.1	45.5
			kW		4.3			4.9			5.5			6.2			7.0	
3000 Cfm	EAT (wb)	58	THC	77.2	77.2	87.2	72.9	72.9	82.3	68	68	76.8	62.8	62.8	70.9	57.4	57.4	64.7
			SHC	67.3	77.2	87.2	63.6	72.9	82.3	59.3	68	76.8	54.8	62.8	70.9	50	57.4	64.7
			kW		4.2			4.8			5.4			6.1			6.8	
		62	THC	77.3	77.3	90.6	73	73	85.5	68.1	68.1	79.8	62.9	62.9	73.7	57.4	57.4	67.3
			SHC	64.1	77.3	90.6	60.5	73	85.5	56.5	68.1	79.8	52.1	62.9	73.7	47.6	57.4	67.3
			kW		4.2			4.8			5.4			6.1			6.8	
		67	THC	83.1	83.1	83.1	78.3	78.3	79.8	72.1	72.1	77.8	65.2	65.2	74.9	58.1	58.1	71.3
			SHC	51.8	65.9	80	50.5	65.2	79.8	48.3	63	77.8	45.5	60.2	74.9	42.5	56.9	71.3
			kW		4.2			4.8			5.4			6.1			6.8	
		72	THC	87.5	87.5	87.5	85.1	85.1	85.1	80.5	80.5	80.5	74.4	74.4	74.4	67.2	67.2	67.2
			SHC	36.2	49.2	62.2	35.6	49.4	63.2	34.2	48.6	63	32.2	46.8	61.5	29.8	44.6	59.4
			kW		4.3			4.8			5.5			6.2			6.9	
		76	THC	–	90.6	90.6	–	87.3	87.3	–	84.7	84.7	–	79.7	79.7	–	73.3	73.3
			SHC	–	38.3	52.4	–	37.2	51.2	–	36.5	50.8	–	35	49.4	–	33.1	47.6
			kW		4.3			4.9			5.5			6.2			7.0	

LEGEND:

– = Do not operate
Cfm = Cubic feet per minute (supply air)
EAT(db) = Entering air temperature (dry bulb)
EAT(wb) = Entering air temperature (wet bulb)
kW = Compressor kilowatts
L/s = Liters per second
SHC = Sensible heat capacity (Gross)
THC = Total heat capacity (Gross)

Table 13 – COOLING CAPACITIES (kW) 2-STAGE COOLING SI

50TC – D09				AMBIENT TEMPERATURE °C														
				29			35			41			46			52		
				EAT (db)			EAT (db)			EAT (db)			EAT (db)			EAT (db)		
				24	27	29	24	27	29	24	27	29	24	27	29	24	27	29
991 L/s	EAT (wb)	14	THC	21.6	21.6	24.4	20.3	20.3	22.9	18.9	18.9	21.4	17.4	17.4	19.7	15.9	15.9	18.0
			SHC	18.8	21.6	24.4	17.6	20.3	22.9	16.5	18.9	21.4	15.2	17.4	19.7	13.9	15.9	18.0
			kW	4.8			5.4			6.1			6.8			7.7		
		17	THC	22.4	22.4	23.9	20.8	20.8	23.1	19.1	19.1	22.0	17.5	17.5	20.5	15.9	15.9	18.7
			SHC	17.3	20.6	23.9	16.5	19.8	23.1	15.6	18.8	22.0	14.4	17.5	20.5	13.2	15.9	18.7
			kW	4.8			5.4			6.1			6.8			7.7		
		19	THC	25.2	25.2	25.2	23.5	23.5	23.5	21.6	21.6	21.6	19.5	19.5	19.5	17.4	17.4	17.8
			SHC	14.4	17.7	21.0	13.7	17.0	20.3	12.9	16.2	19.5	12.0	15.4	18.7	11.2	14.5	17.8
			kW	4.9			5.6			6.2			7.0			7.8		
		22	THC	27.8	27.8	27.8	26.4	26.4	26.4	24.5	24.5	24.5	22.5	22.5	22.5	20.3	20.3	20.3
			SHC	11.2	14.5	17.8	10.7	14.0	17.3	10.0	13.3	16.6	9.2	12.5	15.9	8.4	11.7	15.1
			kW	5.0			5.6			6.4			7.2			8.0		
		24	THC	–	29.4	29.4	–	28.2	28.2	–	26.8	26.8	–	24.9	24.9	–	22.7	22.7
			SHC	–	11.7	15.1	–	11.3	14.7	–	10.8	14.2	–	10.2	13.5	–	9.5	12.8
			kW	5.1			5.7			6.4			7.3			8.1		
1156 L/s	EAT (wb)	14	THC	22.7	22.7	25.8	21.4	21.4	24.3	20.0	20.0	22.6	18.4	18.4	20.9	16.8	16.8	19.1
			SHC	19.7	22.7	25.8	18.5	21.4	24.3	17.3	20.0	22.6	16.0	18.4	20.9	14.6	16.8	19.1
			kW	4.9			5.5			6.1			6.9			7.7		
		17	THC	23.2	23.2	26.0	21.6	21.6	25.0	20.0	20.0	23.6	18.5	18.5	21.7	16.8	16.8	19.9
			SHC	18.4	22.2	26.0	17.5	21.2	25.0	16.4	20.0	23.6	15.1	18.5	21.7	13.8	16.8	19.9
			kW	4.9			5.5			6.1			6.9			7.7		
		19	THC	25.9	25.9	25.9	24.1	24.1	24.1	22.2	22.2	22.2	20.1	20.1	20.4	17.9	17.9	19.5
			SHC	15.1	18.9	22.8	14.4	18.2	22.1	13.6	17.4	21.3	12.7	16.6	20.4	11.9	15.7	19.5
			kW	4.9			5.6			6.3			7.0			7.8		
		22	THC	28.3	28.3	28.3	27.0	27.0	27.0	25.2	25.2	25.2	23.1	23.1	23.1	20.9	20.9	20.9
			SHC	11.4	15.1	18.9	10.9	14.7	18.6	10.2	14.1	18.0	9.5	13.3	17.2	8.7	12.5	16.4
			kW	5.0			5.7			6.4			7.2			8.1		
		24	THC	–	29.8	29.8	–	28.6	28.6	–	27.3	27.3	–	25.4	25.4	–	23.3	23.3
			SHC	–	12.1	16.0	–	11.7	15.6	–	11.2	15.1	–	10.6	14.5	–	9.9	13.8
			kW	5.1			5.8			6.5			7.3			8.2		
1321 L/s	EAT (wb)	14	THC	23.8	23.8	27.0	22.4	22.4	25.4	20.9	20.9	23.7	19.3	19.3	21.9	17.6	17.6	20.0
			SHC	20.5	23.8	27.0	19.3	22.4	25.4	18.0	20.9	23.7	16.6	19.3	21.9	15.2	17.6	20.0
			kW	4.9			5.5			6.2			7.0			7.8		
		17	THC	24.0	24.0	27.8	22.4	22.4	26.5	20.9	20.9	24.7	19.3	19.3	22.8	17.6	17.6	20.9
			SHC	19.3	23.6	27.8	18.3	22.4	26.5	17.1	20.9	24.7	15.8	19.3	22.8	14.4	17.6	20.9
			kW	4.9			5.5			6.2			7.0			7.8		
		19	THC	26.5	26.5	26.5	24.7	24.7	24.7	22.7	22.7	23.0	20.6	20.6	22.2	18.3	18.3	21.2
			SHC	15.7	20.1	24.4	15.0	19.4	23.8	14.2	18.6	23.0	13.4	17.8	22.2	12.5	16.9	21.2
			kW	5.0			5.6			6.3			7.1			7.9		
		22	THC	28.7	28.7	28.7	27.5	27.5	27.5	25.7	25.7	25.7	23.6	23.6	23.6	21.3	21.3	21.3
			SHC	11.5	15.7	19.9	11.1	15.4	19.7	10.5	14.9	19.2	9.7	14.1	18.5	8.9	13.3	17.7
			kW	5.0			5.7			6.4			7.2			8.1		
		24	THC	–	30.1	30.1	–	28.9	28.9	–	27.7	27.7	–	25.8	25.8	–	23.7	23.7
			SHC	–	12.4	16.7	–	12.0	16.3	–	11.6	15.9	–	11.0	15.4	–	10.3	14.7
			kW	5.1			5.8			6.5			7.3			8.2		
1487 L/s	EAT (wb)	14	THC	24.7	24.7	28.1	23.2	23.2	26.5	21.7	21.7	24.7	20.0	20.0	22.8	18.3	18.3	20.9
			SHC	21.2	24.7	28.1	20.0	23.2	26.5	18.7	21.7	24.7	17.3	20.0	22.8	15.8	18.3	20.9
			kW	4.9			5.6			6.3			7.0			7.9		
		17	THC	24.7	24.7	29.3	23.3	23.3	27.6	21.7	21.7	25.7	20.1	20.1	23.8	18.3	18.3	21.7
			SHC	20.1	24.7	29.3	19.0	23.3	27.6	17.7	21.7	25.7	16.3	20.1	23.8	14.9	18.3	21.7
			kW	4.9			5.6			6.3			7.0			7.9		
		19	THC	27.0	27.0	27.0	25.2	25.2	25.4	23.1	23.1	24.7	20.9	20.9	23.8	18.7	18.7	22.8
			SHC	16.3	21.1	26.0	15.6	20.5	25.4	14.9	19.7	24.7	14.0	18.9	23.8	13.1	17.9	22.8
			kW	5.0			5.6			6.4			7.1			7.9		
		22	THC	29.0	29.0	29.0	27.8	27.8	27.8	26.1	26.1	26.1	24.0	24.0	24.0	21.7	21.7	21.7
			SHC	11.6	16.3	20.9	11.2	16.0	20.8	10.7	15.5	20.4	9.9	14.8	19.7	9.1	14.1	19.0
			kW	5.1			5.7			6.4			7.2			8.1		
		24	THC	–	30.4	30.4	–	29.1	29.1	–	27.9	27.9	–	26.1	26.1	–	24.0	24.0
			SHC	–	12.6	17.4	–	12.2	16.9	–	11.9	16.7	–	11.3	16.2	–	10.7	15.6
			kW	5.1			5.8			6.5			7.3			8.2		
1652 L/s	EAT (wb)	14	THC	25.5	25.5	29.0	24.0	24.0	27.4	22.4	22.4	25.5	20.7	20.7	23.6	18.9	18.9	21.6
			SHC	21.9	25.5	29.0	20.6	24.0	27.4	19.2	22.4	25.5	17.8	20.7	23.6	16.3	18.9	21.6
			kW	4.9			5.6			6.3			7.1			8.0		
		17	THC	25.5	25.5	30.3	24.0	24.0	28.5	22.4	22.4	26.6	20.7	20.7	24.6	19.0	19.0	22.5
			SHC	20.7	25.5	30.3	19.5	24.0	28.5	18.2	22.4	26.6	16.8	20.7	24.6	15.4	19.0	22.5
			kW	4.9			5.6			6.4			7.1			8.0		
		19	THC	27.3	27.3	27.3	25.5	25.5	27.0	23.5	23.5	26.3	21.3	21.3	25.3	19.2	19.2	23.9
			SHC	16.8	22.1	27.3	16.2	21.6	27.0	15.4	20.9	26.3	14.6	20.0	25.3	13.5	18.7	23.9
			kW	5.0			5.6			6.4			7.2			8.0		
		22	THC	29.2	29.2	29.2	28.0	28.0	28.0	26.4	26.4	26.4	24.3	24.3	24.3	21.9	21.9	21.9
			SHC	11.7	16.8	21.8	11.3	16.5	21.7	10.8	16.2	21.6	10.1	15.5	20.9	9.3	14.8	20.2
			kW	5.1			5.7			6.4			7.2			8.1		
		24	THC	–	30.6	30.6	–	29.3	29.3	–	28.1	28.1	–	26.3	26.3	–	24.2	24.2
			SHC	–	12.9	18.0	–	12.5	17.6	–	12.1	17.3	–	11.6	17.0	–	11.0	16.4
			kW	5.1			5.8			6.5			7.3			8.2		

LEGEND:

– = Do not operate
Cfm = Cubic feet per minute (supply air)
EAT(db) = Entering air temperature (dry bulb)
EAT(wb) = Entering air temperature (wet bulb)
kW = Compressor kilowatts
L/s = Liters per second
SHC = Sensible heat capacity (Gross)
THC = Total heat capacity (Gross)

Table 14 – COOLING CAPACITIES (MBH) 2-STAGE COOLING ENGLISH

50TC – D09				AMBIENT TEMPERATURE °F													
				85			95			105			115			125		
				EAT (db)			EAT (db)			EAT (db)			EAT (db)			EAT (db)		
				75	80	85	75	80	85	75	80	85	75	80	85	75	80	85
2100 Cfm	EAT (wb)	58	THC	73.6	73.6	83.2	69.3	69.3	78.3	64.6	64.6	73	59.5	59.5	67.3	54.3	54.3	61.4
			SHC	64	73.6	83.2	60.2	69.3	78.3	56.2	64.6	73	51.8	59.5	67.3	47.3	54.3	61.4
			kW		4.8			5.4			6.1			6.8			7.7	
		62	THC	76.6	76.6	81.5	71	71	78.8	65.2	65.2	75.1	59.6	59.6	70	54.4	54.4	63.9
			SHC	58.9	70.2	81.5	56.3	67.6	78.8	53.1	64.1	75.1	49.3	59.6	70	45	54.4	63.9
			kW		4.8			5.4			6.1			6.8			7.7	
		67	THC	86	86	86	80.1	80.1	80.1	73.7	73.7	73.7	66.7	66.7	66.7	59.4	59.4	60.8
			SHC	49	60.4	71.7	46.6	57.9	69.2	43.9	55.2	66.6	41.1	52.4	63.7	38.2	49.5	60.8
			kW		4.9			5.6			6.2			7.0			7.8	
		72	THC	94.8	94.8	94.8	90	90	90	83.7	83.7	83.7	76.7	76.7	76.7	69.3	69.3	69.3
			SHC	38.2	49.5	60.7	36.4	47.8	59.1	34	45.4	56.7	31.4	42.8	54.2	28.8	40.1	51.4
			kW		5.0			5.6			6.4			7.2			8.0	
		76	THC	–	100.2	100.2	–	96.3	96.3	–	91.4	91.4	–	84.9	84.9	–	77.6	77.6
			SHC	–	40.1	51.6	–	38.7	50.2	–	37	48.5	–	34.8	46.2	–	32.3	43.8
			kW		5.1			5.7			6.4			7.3			8.1	
2450 Cfm	EAT (wb)	58	THC	77.6	77.6	88	73	73	82.8	68.1	68.1	77.2	62.9	62.9	71.3	57.4	57.4	65.1
			SHC	67.2	77.6	88	63.3	73	82.8	59	68.1	77.2	54.5	62.9	71.3	49.7	57.4	65.1
			kW		4.9			5.5			6.1			6.9			7.7	
		62	THC	79.2	79.2	88.9	73.7	73.7	85.2	68.2	68.2	80.4	63	63	74.2	57.5	57.5	67.8
			SHC	62.8	75.8	88.9	59.7	72.4	85.2	56.1	68.2	80.4	51.7	63	74.2	47.2	57.5	67.8
			kW		4.9			5.5			6.1			6.9			7.7	
		67	THC	88.5	88.5	88.5	82.4	82.4	82.4	75.8	75.8	75.8	68.6	68.6	69.7	61.1	61.1	66.7
			SHC	51.4	64.6	77.7	49	62.1	75.3	46.3	59.4	72.6	43.4	56.6	69.7	40.5	53.6	66.7
			kW		4.9			5.6			6.2			7.0			7.8	
		72	THC	96.6	96.6	96.6	92.2	92.2	92.2	86	86	86	78.8	78.8	78.8	71.2	71.2	71.2
			SHC	38.8	51.6	64.5	37.2	50.3	63.5	34.9	48.1	61.3	32.3	45.5	58.7	29.7	42.8	56
			kW		5.0			5.7			6.4			7.2			8.1	
		76	THC	–	101.7	101.7	–	97.6	97.6	–	93.1	93.1	–	86.8	86.8	–	79.5	79.5
			SHC	–	41.3	54.7	–	39.8	53.1	–	38.3	51.6	–	36.2	49.5	–	33.8	47.1
			kW		5.1			5.8			6.5			7.3			8.2	
2800 Cfm	EAT (wb)	58	THC	81.1	81.1	92.1	76.4	76.4	86.8	71.3	71.3	81	65.8	65.8	74.8	60.1	60.1	68.3
			SHC	70	81.1	92.1	65.9	76.4	86.8	61.5	71.3	81	56.8	65.8	74.8	51.9	60.1	68.3
			kW		4.9			5.5			6.2			7.0			7.8	
		62	THC	81.8	81.8	94.8	76.5	76.5	90.4	71.4	71.4	84.4	65.9	65.9	77.9	60.2	60.2	71.2
			SHC	65.9	80.4	94.8	62.6	76.5	90.4	58.4	71.4	84.4	53.9	65.9	77.9	49.2	60.2	71.2
			kW		4.9			5.5			6.2			7.0			7.8	
		67	THC	90.5	90.5	90.5	84.3	84.3	84.3	77.4	77.4	78.5	70.2	70.2	75.6	62.5	62.5	72.4
			SHC	53.6	68.5	83.4	51.2	66.2	81.2	48.5	63.5	78.5	45.7	60.6	75.6	42.7	57.6	72.4
			kW		5.0			5.6			6.3			7.1			7.9	
		72	THC	97.8	97.8	97.8	93.8	93.8	93.8	87.7	87.7	87.7	80.5	80.5	80.5	72.7	72.7	72.7
			SHC	39.3	53.6	68	37.9	52.6	67.4	35.7	50.7	65.6	33.2	48.2	63.2	30.4	45.5	60.5
			kW		5.1			5.7			6.4			7.2			8.1	
		76	THC	–	102.9	102.9	–	98.6	98.6	–	94.4	94.4	–	88.1	88.1	–	80.8	80.8
			SHC	–	42.3	57.1	–	40.8	55.6	–	39.5	54.4	–	37.5	52.5	–	35.1	50.2
			kW		5.1			5.8			6.5			7.3			8.2	
3150 Cfm	EAT (wb)	58	THC	84.2	84.2	95.9	79.3	79.3	90.3	74	74	84.3	68.4	68.4	77.9	62.5	62.5	71.2
			SHC	72.5	84.2	95.9	68.3	79.3	90.3	63.8	74	84.3	58.9	68.4	77.9	53.8	62.5	71.2
			kW		4.9			5.6			6.3			7.0			7.9	
		62	THC	84.3	84.3	100	79.4	79.4	94.1	74.1	74.1	87.8	68.5	68.5	81.2	62.6	62.6	74.2
			SHC	68.7	84.3	100	64.7	79.4	94.1	60.4	74.1	87.8	55.8	68.5	81.2	51	62.6	74.2
			kW		4.9			5.6			6.3			7.0			7.9	
		67	THC	92	92	92	85.9	85.9	86.8	78.9	78.9	84.2	71.5	71.5	81.1	63.8	63.8	77.7
			SHC	55.6	72.1	88.6	53.4	70.1	86.8	50.7	67.4	84.2	47.8	64.5	81.1	44.7	61.2	77.7
			kW		5.0			5.6			6.4			7.1			7.9	
		72	THC	98.9	98.9	98.9	94.9	94.9	94.9	89	89	89	81.8	81.8	81.8	73.9	73.9	73.9
			SHC	39.7	55.5	71.3	38.3	54.7	71	36.4	53	69.7	33.9	50.6	67.4	31.2	48	64.8
			kW		5.1			5.7			6.4			7.2			8.1	
		76	THC	–	103.8	103.8	–	99.4	99.4	–	95.3	95.3	–	89.1	89.1	–	81.9	81.9
			SHC	–	43.1	59.3	–	41.7	57.8	–	40.5	56.9	–	38.6	55.3	–	36.4	53.1
			kW		5.1			5.8			6.5			7.3			8.2	
3500 Cfm	EAT (wb)	58	THC	86.9	86.9	99.1	81.9	81.9	93.4	76.4	76.4	87.2	70.7	70.7	80.6	64.6	64.6	73.7
			SHC	74.7	86.9	99.1	70.4	81.9	93.4	65.7	76.4	87.2	60.8	70.7	80.6	55.5	64.6	73.7
			kW		4.9			5.6			6.3			7.1			8.0	
		62	THC	87	87	103.3	82	82	97.3	76.5	76.5	90.9	70.8	70.8	84	64.7	64.7	76.8
			SHC	70.7	87	103.3	66.6	82	97.3	62.2	76.5	90.9	57.5	70.8	84	52.6	64.7	76.8
			kW		4.9			5.6			6.4			7.1			8.0	
		67	THC	93.1	93.1	93.3	87.1	87.1	92.3	80.2	80.2	89.7	72.7	72.7	86.5	65.4	65.4	81.6
			SHC	57.3	75.3	93.3	55.4	73.8	92.3	52.7	71.2	89.7	49.8	68.1	86.5	46.2	63.9	81.6
			kW		5.0			5.6			6.4			7.2			8.0	
		72	THC	99.7	99.7	99.7	95.6	95.6	95.6	90.1	90.1	90.1	82.9	82.9	82.9	74.9	74.9	74.9
			SHC	40	57.2	74.4	38.7	56.4	74	36.9	55.3	73.6	34.5	53	71.5	31.8	50.4	69
			kW		5.1			5.7			6.4			7.2			8.1	
		76	THC	–	104.6	104.6	–	100	100	–	95.9	95.9	–	89.9	89.9	–	82.7	82.7
			SHC	–	44	61.4	–	42.5	59.9	–	41.4	59.2	–	39.7	57.9	–	37.5	55.9
			kW		5.1			5.8			6.5			7.3			8.2	

LEGEND:

– = Do not operate
Cfm = Cubic feet per minute (supply air)
EAT(db) = Entering air temperature (dry bulb)
EAT(wb) = Entering air temperature (wet bulb)
kW = Compressor kilowatts
L/s = Liters per second
SHC = Sensible heat capacity (Gross)
THC = Total heat capacity (Gross)

Table 15 – COOLING CAPACITIES (kW) 2-STAGE COOLING SI

50TC – D12				AMBIENT TEMPERATURE °C													
				29			35			41			46			52		
				EAT (db)			EAT (db)			EAT (db)			EAT (db)			EAT (db)		
				24	27	29	24	27	29	24	27	29	24	27	29	24	27	29
1203 L/s	EAT (wb)	14	THC	27.3	27.3	30.8	25.7	25.7	28.9	23.9	23.9	27.0	22.1	22.1	24.9	20.0	20.0	22.6
			SHC	23.8	27.3	30.8	22.4	25.7	28.9	20.9	23.9	27.0	19.2	22.1	24.9	17.5	20.0	22.6
			kW	5.8			6.6			7.4			8.3			9.3		
		17	THC	28.6	28.6	30.0	26.5	26.5	28.9	24.2	24.2	27.6	22.1	22.1	25.9	20.1	20.1	23.5
			SHC	21.9	25.9	30.0	20.8	24.9	28.9	19.7	23.6	27.6	18.3	22.1	25.9	16.6	20.1	23.5
			kW	5.9			6.7			7.5			8.3			9.3		
		19	THC	32.3	32.3	32.3	29.9	29.9	29.9	27.5	27.5	27.5	24.9	24.9	24.9	22.1	22.1	22.2
			SHC	18.3	22.4	26.4	17.3	21.4	25.4	16.3	20.4	24.4	15.3	19.3	23.4	14.2	18.2	22.2
			kW	6.1			6.9			7.7			8.6			9.5		
		22	THC	35.4	35.4	35.4	33.7	33.7	33.7	31.3	31.3	31.3	28.6	28.6	28.6	25.8	25.8	25.8
			SHC	14.3	18.4	22.4	13.7	17.7	21.8	12.7	16.8	20.9	11.8	15.9	19.9	10.7	14.8	18.8
			kW	6.2			7.0			7.9			8.9			9.9		
		24	THC	–	37.7	37.7	–	35.9	35.9	–	34.0	34.0	–	31.6	31.6	–	28.9	28.9
			SHC	–	15.0	19.1	–	14.4	18.5	–	13.7	17.8	–	12.9	17.0	–	12.0	16.1
			kW	6.3			7.2			8.1			9.0			10.1		
1404 L/s	EAT (wb)	14	THC	29.2	29.2	32.9	27.4	27.4	30.9	25.6	25.6	28.9	23.6	23.6	26.6	21.5	21.5	24.2
			SHC	25.4	29.2	32.9	23.9	27.4	30.9	22.3	25.6	28.9	20.6	23.6	26.6	18.7	21.5	24.2
			kW	6.0			6.7			7.6			8.5			9.4		
		17	THC	29.8	29.8	33.1	27.7	27.7	31.6	25.6	25.6	30.0	23.6	23.6	27.7	21.5	21.5	25.2
			SHC	23.8	28.5	33.1	22.5	27.1	31.6	21.2	25.6	30.0	19.6	23.6	27.7	17.8	21.5	25.2
			kW	6.0			6.8			7.6			8.5			9.4		
		19	THC	33.3	33.3	33.3	31.0	31.0	31.0	28.5	28.5	28.5	25.8	25.8	25.9	22.8	22.8	24.7
			SHC	19.5	24.2	28.9	18.6	23.3	28.0	17.6	22.3	27.0	16.5	21.2	25.9	15.4	20.0	24.7
			kW	6.1			6.9			7.8			8.7			9.6		
		22	THC	36.3	36.3	36.3	34.5	34.5	34.5	32.3	32.3	32.3	29.6	29.6	29.6	26.6	26.6	26.6
			SHC	14.8	19.4	24.1	14.2	18.8	23.5	13.3	18.0	22.8	12.3	17.1	21.8	11.3	16.0	20.7
			kW	6.3			7.1			8.0			9.0			10.0		
		24	THC	–	38.4	38.4	–	36.6	36.6	–	34.7	34.7	–	32.4	32.4	–	29.7	29.7
			SHC	–	15.6	20.3	–	14.9	19.7	–	14.3	19.0	–	13.5	18.3	–	12.6	17.4
			kW	6.4			7.2			8.2			9.1			10.1		
1605 L/s	EAT (wb)	14	THC	30.8	30.8	34.7	28.9	28.9	32.6	27.0	27.0	30.4	24.9	24.9	28.1	22.7	22.7	25.6
			SHC	26.9	30.8	34.7	25.2	28.9	32.6	23.5	27.0	30.4	21.7	24.9	28.1	19.8	22.7	25.6
			kW	6.0			6.9			7.7			8.6			9.6		
		17	THC	31.1	31.1	35.6	28.9	28.9	33.9	27.0	27.0	31.6	24.9	24.9	29.2	22.7	22.7	26.6
			SHC	25.3	30.5	35.6	24.0	28.9	33.9	22.4	27.0	31.6	20.7	24.9	29.2	18.8	22.7	26.6
			kW	6.0			6.9			7.7			8.6			9.6		
		19	THC	34.1	34.1	34.1	31.8	31.8	31.8	29.2	29.2	29.4	26.4	26.4	28.3	23.5	23.5	27.1
			SHC	20.6	25.9	31.2	19.7	25.1	30.5	18.7	24.1	29.4	17.6	23.0	28.3	16.5	21.8	27.1
			kW	6.1			7.0			7.9			8.8			9.7		
		22	THC	36.9	36.9	36.9	35.1	35.1	35.1	33.0	33.0	33.0	30.3	30.3	30.3	27.3	27.3	27.3
			SHC	15.2	20.4	25.6	14.5	19.8	25.1	13.8	19.2	24.5	12.9	18.2	23.6	11.8	17.2	22.6
			kW	6.3			7.1			8.0			9.0			10.0		
		24	THC	–	39.0	39.0	–	37.1	37.1	–	35.2	35.2	–	33.0	33.0	–	30.2	30.2
			SHC	–	16.0	21.4	–	15.4	20.7	–	14.7	20.0	–	14.1	19.4	–	13.2	18.6
			kW	6.4			7.3			8.2			9.1			10.2		
1805 L/s	EAT (wb)	14	THC	32.2	32.2	36.3	30.2	30.2	34.1	28.2	28.2	31.8	26.0	26.0	29.4	23.7	23.7	26.8
			SHC	28.1	32.2	36.3	26.3	30.2	34.1	24.6	28.2	31.8	22.7	26.0	29.4	20.7	23.7	26.8
			kW	6.1			6.9			7.8			8.7			9.7		
		17	THC	32.2	32.2	37.7	30.2	30.2	35.4	28.2	28.2	33.0	26.0	26.0	30.5	23.7	23.7	27.8
			SHC	26.7	32.2	37.7	25.1	30.2	35.4	23.4	28.2	33.0	21.6	26.0	30.5	19.7	23.7	27.8
			kW	6.1			6.9			7.8			8.7			9.7		
		19	THC	34.6	34.6	34.6	32.6	32.6	32.8	29.9	29.9	31.8	27.0	27.0	30.7	24.1	24.1	29.1
			SHC	21.6	27.5	33.4	20.9	26.8	32.8	19.8	25.8	31.8	18.7	24.7	30.7	17.4	23.3	29.1
			kW	6.2			7.0			7.9			8.8			9.7		
		22	THC	37.4	37.4	37.4	35.6	35.6	35.6	33.5	33.5	33.5	30.9	30.9	30.9	27.8	27.8	27.8
			SHC	15.5	21.3	27.0	14.9	20.7	26.5	14.2	20.2	26.1	13.3	19.3	25.3	12.3	18.3	24.3
			kW	6.3			7.2			8.1			9.0			10.0		
		24	THC	–	39.4	39.4	–	37.5	37.5	–	35.5	35.5	–	33.3	33.3	–	30.6	30.6
			SHC	–	16.5	22.3	–	15.8	21.6	–	15.2	20.9	–	14.6	20.5	–	13.7	19.7
			kW	6.5			7.3			8.2			9.2			10.2		
2006 L/s	EAT (wb)	14	THC	33.2	33.2	37.4	31.3	31.3	35.3	29.2	29.2	33.0	27.0	27.0	30.4	24.6	24.6	27.7
			SHC	28.9	33.2	37.4	27.3	31.3	35.3	25.5	29.2	33.0	23.5	27.0	30.4	21.4	24.6	27.7
			kW	6.1			7.0			7.9			8.8			9.8		
		17	THC	33.2	33.2	38.9	31.4	31.4	36.7	29.3	29.3	34.3	27.0	27.0	31.6	24.6	24.6	28.9
			SHC	27.5	33.2	38.9	26.0	31.4	36.7	24.3	29.3	34.3	22.4	27.0	31.6	20.4	24.6	28.9
			kW	6.1			7.0			7.9			8.8			9.8		
		19	THC	35.0	35.0	35.5	33.1	33.1	35.0	30.4	30.4	34.1	27.5	27.5	32.8	24.7	24.7	30.9
			SHC	22.5	29.0	35.5	21.9	28.5	35.0	20.9	27.5	34.1	19.7	26.3	32.8	18.3	24.6	30.9
			kW	6.2			7.0			7.9			8.9			9.8		
		22	THC	37.8	37.8	37.8	35.9	35.9	35.9	33.9	33.9	33.9	31.3	31.3	31.3	28.2	28.2	28.2
			SHC	15.9	22.1	28.4	15.2	21.5	27.9	14.6	21.1	27.6	13.7	20.4	27.0	12.7	19.4	26.0
			kW	6.4			7.2			8.1			9.0			10.0		
		24	THC	–	39.7	39.7	–	37.8	37.8	–	35.7	35.7	–	33.6	33.6	–	30.9	30.9
			SHC	–	16.8	23.1	–	16.2	22.5	–	15.6	21.8	–	15.0	21.4	–	14.2	20.8
			kW	6.5			7.3			8.2			9.2			10.2		

LEGEND:

– = Do not operate
Cfm = Cubic feet per minute (supply air)
EAT(db) = Entering air temperature (dry bulb)
EAT(wb) = Entering air temperature (wet bulb)
kW = Compressor kilowatts
L/s = Liters per second
SHC = Sensible heat capacity (Gross)
THC = Total heat capacity (Gross)

Table 16 – COOLING CAPACITIES (MBH) 2-STAGE COOLING ENGLISH

50TC – D12				AMBIENT TEMPERATURE °F													
				85			95			105			115			125		
				EAT (db)			EAT (db)			EAT (db)			EAT (db)			EAT (db)		
				75	80	85	75	80	85	75	80	85	75	80	85	75	80	85
2550 Cfm	EAT (wb)	58	THC	93.2	93.2	105.1	87.6	87.6	98.8	81.7	81.7	92.1	75.3	75.3	84.9	68.4	68.4	77.2
			SHC	81.2	93.2	105.1	76.4	87.6	98.8	71.2	81.7	92.1	65.6	75.3	84.9	59.7	68.4	77.2
			kW		5.8			6.6			7.4			8.3			9.3	
		62	THC	97.7	97.7	102.3	90.3	90.3	98.7	82.7	82.7	94.1	75.4	75.4	88.3	68.6	68.6	80.3
			SHC	74.6	88.5	102.3	71.1	84.9	98.7	67.1	80.6	94.1	62.5	75.4	88.3	56.8	68.6	80.3
			kW		5.9			6.7			7.5			8.3			9.3	
		67	THC	110.1	110.1	110.1	102	102	102	93.9	93.9	93.9	84.9	84.9	84.9	75.3	75.3	75.9
			SHC	62.5	76.4	90.2	59.1	73	86.8	55.7	69.6	83.4	52.1	65.9	79.8	48.3	62.1	75.9
			kW		6.1			6.9			7.7			8.6			9.5	
		72	THC	120.9	120.9	120.9	114.9	114.9	114.9	106.7	106.7	106.7	97.7	97.7	97.7	87.9	87.9	87.9
			SHC	48.9	62.7	76.6	46.6	60.5	74.4	43.5	57.4	71.3	40.2	54.1	68	36.6	50.5	64.3
			kW		6.2			7.0			7.9			8.9			9.9	
		76	THC	–	128.5	128.5	–	122.6	122.6	–	116.2	116.2	–	108	108	–	98.5	98.5
			SHC	–	51.2	65.2	–	49.1	63.1	–	46.8	60.9	–	44	58	–	40.8	54.8
			kW		6.3			7.2			8.1			9.0			10.1	
2975 Cfm	EAT (wb)	58	THC	99.6	99.6	112.3	93.6	93.6	105.6	87.3	87.3	98.5	80.5	80.5	90.8	73.3	73.3	82.7
			SHC	86.8	99.6	112.3	81.6	93.6	105.6	76.1	87.3	98.5	70.2	80.5	90.8	63.9	73.3	82.7
			kW		6.0			6.7			7.6			8.5			9.4	
		62	THC	101.8	101.8	113.1	94.4	94.4	107.9	87.4	87.4	102.4	80.6	80.6	94.4	73.4	73.4	86
			SHC	81.2	97.1	113.1	76.8	92.4	107.9	72.5	87.4	102.4	66.8	80.6	94.4	60.8	73.4	86
			kW		6.0			6.8			7.6			8.5			9.4	
		67	THC	113.8	113.8	113.8	105.8	105.8	105.8	97.1	97.1	97.1	87.9	87.9	88.4	77.9	77.9	84.4
			SHC	66.6	82.7	98.7	63.5	79.5	95.6	59.9	76	92.1	56.3	72.3	88.4	52.4	68.4	84.4
			kW		6.1			6.9			7.8			8.7			9.6	
		72	THC	123.9	123.9	123.9	117.9	117.9	117.9	110.2	110.2	110.2	101	101	101	90.8	90.8	90.8
			SHC	50.5	66.3	82.2	48.3	64.2	80.2	45.5	61.6	77.7	42.1	58.3	74.4	38.5	54.7	70.8
			kW		6.3			7.1			8.0			9.0			10.0	
		76	THC	–	131.1	131.1	–	125	125	–	118.5	118.5	–	110.7	110.7	–	101.3	101.3
			SHC	–	53.1	69.4	–	51	67.2	–	48.7	64.9	–	46.2	62.4	–	43.1	59.3
			kW		6.4			7.2			8.2			9.1			10.1	
3400 Cfm	EAT (wb)	58	THC	105.2	105.2	118.6	98.6	98.6	111.3	92	92	103.8	85	85	95.8	77.4	77.4	87.3
			SHC	91.7	105.2	118.6	86	98.6	111.3	80.2	92	103.8	74.1	85	95.8	67.5	77.4	87.3
			kW		6.0			6.9			7.7			8.6			9.6	
		62	THC	106.1	106.1	121.5	98.8	98.8	115.7	92.2	92.2	107.9	85.1	85.1	99.6	77.5	77.5	90.8
			SHC	86.4	104	121.5	81.9	98.8	115.7	76.4	92.2	107.9	70.5	85.1	99.6	64.2	77.5	90.8
			kW		6.0			6.9			7.7			8.6			9.6	
		67	THC	116.4	116.4	116.4	108.7	108.7	108.7	99.7	99.7	100.5	90.2	90.2	96.7	80.1	80.1	92.6
			SHC	70.3	88.5	106.6	67.4	85.7	104	63.9	82.2	100.5	60.2	78.4	96.7	56.2	74.4	92.6
			kW		6.1			7.0			7.9			8.8			9.7	
		72	THC	126	126	126	119.9	119.9	119.9	112.6	112.6	112.6	103.4	103.4	103.4	93.1	93.1	93.1
			SHC	51.8	69.6	87.4	49.6	67.5	85.5	47.1	65.4	83.6	43.9	62.2	80.6	40.3	58.7	77
			kW		6.3			7.1			8.0			9.0			10.0	
		76	THC	–	133	133	–	126.7	126.7	–	120	120	–	112.5	112.5	–	103.2	103.2
			SHC	–	54.7	72.9	–	52.5	70.6	–	50.3	68.3	–	48	66.3	–	45.1	63.5
			kW		6.4			7.3			8.2			9.1			10.2	
3825 Cfm	EAT (wb)	58	THC	109.8	109.8	123.9	103.1	103.1	116.3	96.1	96.1	108.4	88.8	88.8	100.2	80.9	80.9	91.3
			SHC	95.8	109.8	123.9	89.9	103.1	116.3	83.8	96.1	108.4	77.4	88.8	100.2	70.5	80.9	91.3
			kW		6.1			6.9			7.8			8.7			9.7	
		62	THC	110	110	128.8	103.2	103.2	120.9	96.3	96.3	112.7	88.9	88.9	104.1	81	81	94.9
			SHC	91.2	110	128.8	85.6	103.2	120.9	79.8	96.3	112.7	73.7	88.9	104.1	67.2	81	94.9
			kW		6.1			6.9			7.8			8.7			9.7	
		67	THC	118.2	118.2	118.2	111.1	111.1	112	101.9	101.9	108.6	92.2	92.2	104.7	82.2	82.2	99.3
			SHC	73.7	93.9	114	71.2	91.6	112	67.7	88.2	108.6	63.9	84.3	104.7	59.4	79.4	99.3
			kW		6.2			7.0			7.9			8.8			9.7	
		72	THC	127.6	127.6	127.6	121.4	121.4	121.4	114.4	114.4	114.4	105.3	105.3	105.3	94.8	94.8	94.8
			SHC	53	72.7	92.3	50.8	70.6	90.4	48.6	68.8	89.1	45.5	66	86.4	41.9	62.5	83.1
			kW		6.3			7.2			8.1			9.0			10.0	
		76	THC	–	134.4	134.4	–	128	128	–	121.1	121.1	–	113.8	113.8	–	104.5	104.5
			SHC	–	56.2	76	–	54	73.8	–	51.8	71.5	–	49.7	69.8	–	46.9	67.3
			kW		6.5			7.3			8.2			9.2			10.2	
4250 Cfm	EAT (wb)	58	THC	113.3	113.3	127.8	106.9	106.9	120.6	99.7	99.7	112.5	92.1	92.1	103.9	84	84	94.7
			SHC	98.8	113.3	127.8	93.2	106.9	120.6	87	99.7	112.5	80.3	92.1	103.9	73.2	84	94.7
			kW		6.1			7.0			7.9			8.8			9.8	
		62	THC	113.4	113.4	132.8	107	107	125.3	99.9	99.9	116.9	92.2	92.2	108	84.1	84.1	98.5
			SHC	94	113.4	132.8	88.7	107	125.3	82.8	99.9	116.9	76.4	92.2	108	69.7	84.1	98.5
			kW		6.1			7.0			7.9			8.8			9.8	
		67	THC	119.6	119.6	121.1	112.9	112.9	119.5	103.8	103.8	116.3	94	94	112.1	84.4	84.4	105.4
			SHC	76.9	99	121.1	74.7	97.1	119.5	71.3	93.8	116.3	67.4	89.8	112.1	62.5	83.9	105.4
			kW		6.2			7.0			7.9			8.9			9.8	
		72	THC	128.9	128.9	128.9	122.5	122.5	122.5	115.7	115.7	115.7	106.7	106.7	106.7	96.2	96.2	96.2
			SHC	54.1	75.5	97	52	73.5	95.1	49.8	72	94.1	46.9	69.5	92.1	43.4	66.1	88.9
			kW		6.4			7.2			8.1			9.0			10.0	
		76	THC	–	135.5	135.5	–	129	129	–	122	122	–	114.7	114.7	–	105.5	105.5
			SHC	–	57.5	78.9	–	55.3	76.7	–	53.1	74.5	–	51.1	73.1	–	48.5	70.9
			kW		6.5			7.3			8.2			9.2			10.2	

LEGEND:

– = Do not operate
Cfm = Cubic feet per minute (supply air)
EAT(db) = Entering air temperature (dry bulb)
EAT(wb) = Entering air temperature (wet bulb)
kW = Compressor kilowatts
L/s = Liters per second
SHC = Sensible heat capacity (Gross)
THC = Total heat capacity (Gross)

Table 17 – COOLING CAPACITIES (kW) 2-STAGE COOLING SI

50TC–D14				AMBIENT TEMPERATURE °C															
				29			35			41			46			52		
				EAT (db)			EAT (db)			EAT (db)			EAT (db)			EAT (db)		
				24	27	29	24	27	29	24	27	29	24	27	29	24	27	29
1416 L/s	EAT (wb)	14	THC	–	–	–	–	–	–	–	–	–	–	–	–	21.2	21.2	24.6
			SHC	–	–	–	–	–	–	–	–	–	–	–	–	17.8	21.2	24.6
			kW	9.0			9.7			10.6			11.5			12.5		
		17	THC	31.9	31.9	31.9	29.4	29.4	29.6	26.7	26.7	28.6	23.9	23.9	27.5	21.2	21.2	25.8
			SHC	20.9	25.7	30.5	19.9	24.8	29.6	19.0	23.8	28.6	17.9	22.7	27.5	16.7	21.2	25.8
			kW	9.2			10.0			10.7			11.6			12.5		
		19	THC	36.1	36.1	36.1	33.3	33.3	33.3	30.6	30.6	30.6	27.6	27.6	27.6	24.4	24.4	24.4
			SHC	15.8	20.6	25.4	14.9	19.7	24.5	14.0	18.8	23.6	13.1	17.9	22.8	12.2	17.1	21.9
			kW	9.5			10.3			11.1			12.0			12.9		
		22	THC	40.4	40.4	40.4	37.8	37.8	37.8	34.9	34.9	34.9	31.8	31.8	31.8	28.6	28.6	28.6
			SHC	10.4	15.2	20.0	9.6	14.4	19.3	8.8	13.7	18.5	8.1	12.9	17.7	7.3	12.1	17.0
			kW	9.6			10.5			11.4			12.4			13.3		
		24	THC	–	43.5	43.5	–	41.3	41.3	–	38.5	38.5	–	35.5	35.5	–	32.2	32.2
			SHC	–	10.5	15.4	–	10.0	14.9	–	9.3	14.2	–	8.7	13.5	–	8.0	12.8
			kW	9.8			10.6			11.6			12.6			13.7		
1652 L/s	EAT (wb)	14	THC	31.4	31.4	36.5	29.4	29.4	34.1	27.3	27.3	31.7	25.1	25.1	29.1	22.7	22.7	26.4
			SHC	26.4	31.4	36.5	24.7	29.4	34.1	22.9	27.3	31.7	21.0	25.1	29.1	19.0	22.7	26.4
			kW	9.3			10.1			10.9			11.9			12.9		
		17	THC	33.2	33.2	34.0	30.5	30.5	33.1	27.7	27.7	32.1	25.1	25.1	30.5	22.7	22.7	27.7
			SHC	22.8	28.4	34.0	21.8	27.5	33.1	20.9	26.5	32.1	19.7	25.1	30.5	17.8	22.7	27.7
			kW	9.6			10.3			11.1			11.9			12.9		
		19	THC	37.4	37.4	37.4	34.5	34.5	34.5	31.6	31.6	31.6	28.5	28.5	28.5	25.1	25.1	25.1
			SHC	16.8	22.4	28.0	15.9	21.5	27.1	15.0	20.7	26.3	14.2	19.8	25.4	13.3	18.9	24.5
			kW	9.9			10.7			11.5			12.4			13.3		
		22	THC	41.6	41.6	41.6	39.1	39.1	39.1	36.1	36.1	36.1	32.8	32.8	32.8	29.4	29.4	29.4
			SHC	10.5	16.1	21.7	9.8	15.4	21.1	9.0	14.7	20.3	8.3	13.9	19.5	7.5	13.1	18.7
			kW	10.0			10.9			11.8			12.8			13.8		
		24	THC	–	44.4	44.4	–	42.2	42.2	–	39.6	39.6	–	36.5	36.5	–	–	–
			SHC	–	10.7	16.4	–	10.2	15.9	–	9.6	15.3	–	9.0	14.7	–	–	–
			kW	10.1			11.0			11.9			130			14.0		
1888 L/s	EAT (wb)	14	THC	33.2	33.2	38.5	31.0	31.0	36.0	28.7	28.7	33.4	26.4	26.4	30.7	23.9	23.9	27.8
			SHC	27.8	33.2	38.5	26.0	31.0	36.0	24.1	28.7	33.4	22.1	26.4	30.7	20.0	23.9	27.8
			kW	9.8			10.			11.4			12.3			13.3		
		17	THC	34.2	34.2	37.4	31.4	31.4	36.4	28.8	28.8	34.7	26.4	26.4	32.2	23.9	23.9	29.2
			SHC	24.6	31.0	37.4	23.6	30.0	36.4	22.3	28.5	34.7	20.7	26.4	32.2	18.7	23.9	29.2
			kW	10.0			10.7			11.4			12.3			13.3		
		19	THC	38.5	38.5	38.5	35.4	35.4	35.4	32.3	32.3	32.3	29.1	29.1	29.1	25.6	25.6	27.1
			SHC	17.8	24.2	30.6	16.8	23.3	29.7	16.0	22.4	28.8	15.1	21.5	28.0	14.2	20.7	27.1
			kW	10.3			11.1			12.0			12.8			13.8		
		22	THC	42.3	42.3	42.3	40.0	40.0	40.0	36.8	36.8	36.8	33.5	33.5	33.5	30.0	30.0	30.0
			SHC	10.5	16.9	23.3	9.9	16.3	22.8	9.2	15.6	22.1	8.4	14.8	21.3	7.6	14.0	20.5
			kW	10.4			11.3			12.2			13.2			14.3		
		24	THC	–	45.0	45.0	–	42.6	42.6	–	40.1	40.1	–	–	–	–	–	–
			SHC	–	10.9	17.3	–	10.4	16.8	–	9.9	16.3	–	–	–	–	–	–
			kW	10.5			11.4			12.3			13.4			14.5		
2124 L/s	EAT (wb)	14	THC	34.6	34.6	40.2	32.3	32.3	37.5	29.9	29.9	34.8	27.5	27.5	32.0	24.8	24.8	29.0
			SHC	29.0	34.6	40.2	27.0	32.3	37.5	25.0	29.9	34.8	22.9	27.5	32.0	20.7	24.8	29.0
			kW	10.2			11.0			11.8			12.8			13.8		
		17	THC	35.0	35.0	40.7	32.4	32.4	38.9	30.0	30.0	36.5	27.5	27.5	33.5	24.9	24.9	30.4
			SHC	26.3	33.5	40.7	25.0	31.9	38.9	23.4	30.0	36.5	21.4	27.5	33.5	19.4	24.9	30.4
			kW	10.4			11.1			11.8			12.8			13.8		
		19	THC	39.0	39.0	39.0	35.9	35.9	35.9	32.8	32.8	32.8	29.4	29.4	30.4	26.0	26.0	29.5
			SHC	18.6	25.8	33.0	17.7	24.9	32.1	16.9	24.1	31.3	16.0	23.2	30.4	15.1	22.4	29.5
			kW	10.7			11.6			12.4			13.3			14.2		
		22	THC	42.7	42.7	42.7	40.3	40.3	40.3	37.3	37.3	37.3	33.9	33.9	33.9	30.3	30.3	30.3
			SHC	10.5	17.6	24.8	9.9	17.1	24.3	9.2	16.4	23.7	8.5	15.7	22.9	7.7	14.9	22.1
			kW	10.8			11.7			12.7			13.7			14.8		
		24	THC	–	45.3	45.3	–	42.8	42.8	–	40.3	40.3	–	–	–	–	–	–
			SHC	–	11.0	18.2	–	10.5	17.7	–	10.0	17.2	–	–	–	–	–	–
			kW	10.9			11.8			12.8			13.8			14.7		
2360 L/s	EAT (wb)	14	THC	35.7	35.7	41.6	33.3	33.3	38.8	30.9	30.9	36.0	28.3	28.3	33.0	25.6	25.6	29.9
			SHC	29.9	35.7	41.6	27.8	33.3	38.8	25.8	30.9	36.0	23.6	28.3	33.0	21.3	25.6	29.9
			kW	10.7			11.5			12.3			13.3			14.3		
		17	THC	35.9	35.9	43.0	33.3	33.3	40.7	30.9	30.9	37.7	28.3	28.3	34.6	25.6	25.6	31.4
			SHC	27.6	35.3	43.0	26.0	33.3	40.7	24.1	30.9	37.7	22.0	28.3	34.6	19.9	25.6	31.4
			kW	10.8			11.5			12.3			13.3			14.3		
		19	THC	39.3	39.3	39.3	36.3	36.3	36.3	33.0	33.0	33.7	29.7	29.7	32.8	26.1	26.1	31.9
			SHC	19.3	27.3	35.2	18.5	26.5	34.5	17.7	25.7	33.7	16.8	24.8	32.8	16.0	24.0	31.9
			kW	11.2			12.0			12.9			13.8			14.7		
		22	THC	42.8	42.8	42.8	40.4	40.4	40.4	37.5	37.5	37.5	34.1	34.1	34.1	30.4	30.4	30.4
			SHC	10.4	18.3	26.2	9.8	17.8	25.7	9.2	17.2	25.2	8.4	16.5	24.5	7.7	15.7	23.7
			kW	11.3			12.2			13.2			14.2			15.3		
		24	THC	–	45.3	45.3	–	42.8	42.8	–	40.2	40.2	–	–	–	–	–	–
			SHC	–	11.0	19.0	–	10.5	18.4	–	10.0	17.9	–	–	–	–	–	–
			kW	11.4			12.3			13.2			14.3			15.2		

LEGEND:

– = Do not operate
Cfm = Cubic feet per minute (supply air)
EAT(db) = Entering air temperature (dry bulb)
EAT(wb) = Entering air temperature (wet bulb)
kW = Compressor kilowatts
L/s = Liters per second
SHC = Sensible heat capacity (Gross)
THC = Total heat capacity (Gross)

Table 18 – COOLING CAPACITIES (MBH) 2-STAGE COOLING ENGLISH

50TC – D14				AMBIENT TEMPERATURE °F													
				85			95			105			115			125		
				EAT (db)			EAT (db)			EAT (db)			EAT (db)			EAT (db)		
				75	80	85	75	80	85	75	80	85	75	80	85	75	80	85
3000 Cfm	EA (wb)	58	THC	–	–	–	–	–	–	–	–	–	–	–	–	72.3	72.3	84
			SHC	–	–	–	–	–	–	–	–	–	–	–	–	60.7	72.3	84
			kW	9.0			9.7			10.6			11.5			12.5		
		62	THC	108.9	108.9	108.9	100.3	100.3	101.0	91.1	91.1	97.7	81.4	81.4	93.8	72.5	72.5	88.1
			SHC	71.3	87.7	104.2	68.0	84.5	101.0	64.8	81.2	97.7	61.2	77.5	93.8	56.9	72.5	88.1
			kW	9.2			10.0			10.7			11.6			12.5		
		67	THC	123.1	123.1	123.1	113.7	113.7	113.7	104.3	104.3	104.3	94.1	94.1	94.1	83.2	83.2	83.2
			SHC	53.8	70.3	86.7	50.7	67.2	83.7	47.8	64.3	80.7	44.8	61.2	77.7	41.7	58.2	74.6
			kW	9.5			10.3			11.1			12.0			12.9		
		72	THC	138.0	138.0	138.0	128.9	128.9	128.9	119.0	119.0	119.0	108.5	108.5	108.5	97.5	97.5	97.5
			SHC	35.4	51.9	68.4	32.8	49.3	65.8	30.2	46.7	63.2	27.5	44.0	60.5	24.9	41.4	57.9
			kW	9.6			10.5			11.4			12.4			13.3		
		76	THC	–	148.4	148.4	–	141.1	141.1	–	131.5	131.5	–	121.1	121.1	–	109.9	109.9
			SHC	–	36.0	52.5	–	34.2	50.7	–	31.9	48.4	–	29.6	46.1	–	27.2	43.7
			kW	9.8			10.6			11.6			12.6			13.7		
3500 Cfm	EA (wb)	58	THC	107.3	107.3	124.5	100.4	100.4	116.5	93.2	93.2	108.2	85.5	85.5	99.3	77.4	77.4	90.0
			SHC	90.1	107.3	124.5	84.3	100.4	116.5	78.2	93.2	108.2	71.6	85.5	99.3	64.8	77.4	90.0
			kW	9.3			10.1			10.9			11.9			12.9		
		62	THC	113.3	113.3	116.1	104.1	104.1	112.8	94.6	94.6	109.5	85.6	85.6	104.1	77.5	77.5	94.4
			SHC	77.8	96.9	116.1	74.5	93.7	112.8	71.3	90.4	109.5	67.1	85.6	104.1	60.7	77.5	94.4
			kW	9.6			10.3			11.1			11.9			12.9		
		67	THC	127.8	127.8	127.8	117.8	117.8	117.8	107.8	107.8	107.8	97.1	97.1	97.1	85.8	85.8	85.8
			SHC	57.3	76.5	95.7	54.2	73.4	92.6	51.3	70.5	89.7	48.3	67.5	86.7	45.3	64.4	83.6
			kW	9.9			10.7			11.5			12.4			13.3		
		72	THC	142.0	142.0	142.0	133.5	133.5	133.5	123.1	123.1	123.1	112.0	112.0	112.0	100.4	100.4	100.4
			SHC	35.7	55.0	74.2	33.5	52.7	72.0	30.8	50.1	69.3	28.2	47.4	66.6	25.5	44.7	63.9
			kW	10.0			10.9			11.8			12.8			13.8		
		76	THC	–	151.7	151.7	–	144.0	144.0	–	135.1	135.1	–	124.6	124.6	–	–	–
			SHC	–	36.6	55.9	–	34.9	54.2	–	32.9	52.2	–	30.7	50.0	–	–	–
			kW	10.1			11.0			11.9			130			14.0		
4000 Cfm	EA (wb)	58	THC	113.2	113.2	131.4	105.8	105.8	122.9	98.1	98.1	114.0	90.0	90.0	104.7	81.5	81.5	94.9
			SHC	94.9	113.2	131.4	88.7	105.8	122.9	82.2	98.1	114.0	75.3	90.0	104.7	68.2	81.5	94.9
			kW	9.8			10.			11.4			12.3			13.3		
		62	THC	116.6	116.6	127.7	107.1	107.1	124.3	98.4	98.4	118.3	90.1	90.1	109.8	81.7	81.7	99.5
			SHC	84.0	105.8	127.7	80.7	102.5	124.3	76.2	97.3	118.3	70.5	90.1	109.8	63.8	81.7	99.5
			kW	10.0			10.7			11.4			12.3			13.3		
		67	THC	131.3	131.3	131.3	120.7	120.7	120.7	110.2	110.2	110.2	99.2	99.2	99.2	87.5	87.5	92.4
			SHC	60.6	82.5	104.4	57.5	79.4	101.3	54.6	76.5	98.4	51.6	73.5	95.4	48.6	70.5	92.4
			kW	10.3			11.1			12.0			12.8			13.8		
		72	THC	144.3	144.3	144.3	136.5	136.5	136.5	125.7	125.7	125.7	114.4	114.4	114.4	102.3	102.3	102.3
			SHC	35.9	57.8	79.6	33.9	55.8	77.7	31.3	53.3	75.3	28.6	50.6	72.6	26.0	47.9	69.9
			kW	10.4			11.3			12.2			13.2			14.3		
		76	THC	–	153.6	153.6	–	145.5	145.5	–	136.9	136.9	–	–	–	–	–	–
			SHC	–	37.2	59.2	–	35.5	57.5	–	33.7	55.7	–	–	–	–	–	–
			kW	10.5			11.4			12.3			13.4			14.5		
4500 Cfm	EA (wb)	58	THC	118.1	118.1	137.3	110.1	110.1	128.1	102.1	102.1	118.9	93.7	93.7	109.1	84.8	84.8	98.9
			SHC	98.9	118.1	137.3	92.2	110.1	128.1	85.4	102.1	118.9	78.2	93.7	109.1	70.8	84.8	98.9
			kW	10.2			11.0			11.8			12.8			13.8		
		62	THC	119.5	119.5	138.8	110.5	110.5	132.7	102.3	102.3	124.7	93.8	93.8	114.4	84.9	84.9	103.7
			SHC	89.9	114.3	138.8	85.3	109.0	132.7	79.9	102.3	124.7	73.2	93.8	114.4	66.1	84.9	103.7
			kW	10.4			11.1			11.8			12.8			13.8		
		67	THC	133.1	133.1	133.1	122.6	122.6	122.6	111.8	111.8	111.8	100.4	100.4	103.8	88.6	88.6	100.8
			SHC	63.4	88.0	112.6	60.5	85.1	109.7	57.6	82.2	106.8	54.7	79.2	103.8	51.7	76.3	100.8
			kW	10.7			11.6			12.4			13.3			14.2		
		72	THC	145.6	145.6	145.6	137.7	137.7	137.7	127.3	127.3	127.3	115.7	115.7	115.7	103.4	103.4	103.4
			SHC	35.8	60.1	84.5	33.9	58.4	82.8	31.5	56.1	80.8	28.9	53.6	78.2	26.2	50.9	75.5
			kW	10.8			11.7			12.7			13.7			14.8		
		76	THC	–	154.5	154.5	–	146.1	146.1	–	137.5	137.5	–	–	–	–	–	–
			SHC	–	37.5	62.2	–	35.8	60.4	–	34.1	58.7	–	–	–	–	–	–
			kW	10.9			11.8			12.8			13.8			14.7		
5000 Cfm	EA (wb)	58	THC	122.0	122.0	142.0	113.7	113.7	132.4	105.4	105.4	122.8	96.6	96.6	112.7	87.4	87.4	102.1
			SHC	102.0	122.0	142.0	95.0	113.7	132.4	87.9	105.4	122.8	80.5	96.6	112.7	72.7	87.4	102.1
			kW	10.7			11.5			12.3			13.3			14.3		
		62	THC	122.5	122.5	146.8	113.8	113.8	138.9	105.5	105.5	128.8	96.7	96.7	118.2	87.5	87.5	107.1
			SHC	94.2	120.5	146.8	88.8	113.8	138.9	82.2	105.5	128.8	75.2	96.7	118.2	67.9	87.5	107.1
			kW	10.8			11.5			12.3			13.3			14.3		
		67	THC	134.1	134.1	134.1	123.9	123.9	123.9	112.7	112.7	115.0	101.2	101.2	112.0	89.2	89.2	109.0
			SHC	66.0	93.1	120.3	63.3	90.6	117.9	60.4	87.7	115.0	57.5	84.8	112.0	54.7	81.8	109.0
			kW	11.2			12.0			12.9			13.8			14.7		
		72	THC	146.1	146.1	146.1	138.0	138.0	138.0	128.0	128.0	128.0	116.4	116.4	116.4	103.7	103.7	103.7
			SHC	35.5	62.4	89.3	33.6	60.6	87.6	31.4	58.7	86.0	28.8	56.2	83.6	26.2	53.6	80.9
			kW	11.3			12.2			13.2			14.2			15.3		
		76	THC	–	154.6	154.6	–	146.1	146.1	–	137.2	137.2	–	–	–	–	–	–
			SHC	–	37.6	64.7	–	35.9	62.8	–	34.2	61.1	–	–	–	–	–	–
			kW	11.4			12.3			13.2			14.3			15.2		

LEGEND:

– = Do not operate
Cfm = Cubic feet per minute (supply air)
EAT(db) = Entering air temperature (dry bulb)
EAT(wb) = Entering air temperature (wet bulb)
kW = Compressor kilowatts
L/s = Liters per second
SHC = Sensible heat capacity (Gross)
THC = Total heat capacity (Gross)

Table 19 – COOLING CAPACITIES (kW) 2-STAGE COOLING SI

50TC – D16				AMBIENT TEMPERATURE °C															
				29			35			41			46			52				
				EAT (db)			EAT (db)			EAT (db)			EAT (db)			EAT (db)				
				75	80	85	75	80	85	75	80	85	75	80	85	75	80	85	
1770 L/s	EAT (wb)	14	THC	37.9	37.9	42.7	36.0	36.0	40.8	33.6	33.6	38.2	28.8	28.8	32.7	28.8	28.8	32.7	
			SHC	32.6	37.7	42.7	31.1	36.0	40.8	29.1	33.6	38.2	25.0	28.8	32.7	24.9	28.8	32.7	
			kW	9.4			10.4			11.6			14.6			14.6			
		17	THC	40.2	40.2	40.7	37.7	37.7	39.5	34.7	34.7	38.0	29.0	29.0	33.7	29.0	29.0	33.7	
			SHC	29.6	35.2	40.7	28.5	34.0	39.5	27.1	32.5	38.0	23.5	28.6	33.7	23.5	28.6	33.7	
			kW	9.6			10.6			11.8			14.6			14.6			
		19	THC	44.5	44.5	44.5	42.3	42.3	42.3	39.3	39.3	39.3	32.6	32.6	32.6	32.6	32.6	32.6	
			SHC	24.2	29.7	35.2	23.4	28.9	34.5	22.2	27.8	33.3	19.6	25.1	30.7	19.6	25.1	30.7	
			kW	9.9			11.1			12.3			15.1			15.1			
		22	THC	48.3	48.3	48.3	46.4	46.4	46.4	44.0	44.0	44.0	37.5	37.5	37.5	37.5	37.5	37.5	
			SHC	18.3	23.9	29.4	17.6	23.2	28.8	16.8	22.4	28.0	14.5	20.1	25.7	14.5	20.1	25.7	
			kW	10.1			11.3			12.6			15.8			15.8			
		24	THC	–	51.1	51.1	–	49.0	49.0	–	46.8	46.8	–	41.1	41.1	–	41.1	41.1	
			SHC	–	19.1	25.2	–	18.5	24.5	–	17.7	23.7	–	15.9	21.7	–	15.9	21.7	
			kW	10.3			11.5			12.8			16.1			16.1			
2065 L/s	EAT (wb)	14	THC	40.1	40.1	45.5	38.2	38.2	43.3	35.8	35.8	40.6	30.7	30.7	34.8	30.7	30.7	34.8	
			SHC	34.7	40.1	45.5	33.1	38.2	43.3	31.0	35.8	40.6	26.6	30.7	34.8	26.6	30.7	34.8	
			kW	9.5			10.7			11.9			14.8			14.9			
		17	THC	41.6	41.6	44.5	39.1	39.1	43.3	36.4	36.4	40.9	30.7	30.7	36.3	30.7	30.7	36.2	
			SHC	31.9	38.2	44.5	30.7	37.0	43.3	28.8	34.9	40.9	25.2	30.7	36.3	25.2	30.7	36.2	
			kW	9.7			10.8			12.0			14.9			14.9			
		19	THC	45.8	45.8	45.8	43.7	43.7	43.7	40.7	40.7	40.7	33.7	33.7	33.9	33.6	33.6	33.9	
			SHC	25.6	31.9	38.1	24.9	31.2	37.6	23.8	30.2	36.6	21.1	27.5	33.9	21.1	27.5	33.9	
			kW	9.9			11.1			12.5			15.3			15.3			
		22	THC	49.5	49.5	49.5	47.5	47.5	47.5	45.1	45.1	45.1	38.6	38.6	38.6	38.6	38.6	38.6	
			SHC	18.8	25.1	31.3	18.2	24.5	30.7	17.4	23.8	30.1	15.2	21.7	28.1	15.2	21.7	28.1	
			kW	10.2			11.4			12.7			15.9			15.9			
		24	THC	–	52.1	52.1	–	49.9	49.9	–	47.5	47.5	–	42.1	42.1	–	42.1	42.1	
			SHC	–	19.8	26.7	–	19.1	25.9	–	18.3	25.1	–	16.6	23.2	–	16.6	23.2	
			kW	10.3			11.5			12.9			16.2			16.2			
2360 L/s	EAT (wb)	14	THC	42.0	42.0	47.6	40.0	40.0	45.4	37.6	37.6	42.6	32.3	32.3	36.6	32.3	32.3	36.6	
			SHC	36.3	42.0	47.6	34.7	40.0	45.4	32.6	37.6	42.6	28.0	32.3	36.6	27.9	32.3	36.6	
			kW	9.7			10.9			12.1			15.1			15.1			
		17	THC	42.8	42.8	47.7	40.6	40.6	45.8	37.9	37.9	43.7	32.3	32.3	38.1	32.3	32.3	38.1	
			SHC	33.7	40.7	47.7	32.2	39.0	45.8	30.5	37.1	43.7	26.5	32.3	38.1	26.5	32.3	38.1	
			kW	9.7			11.0			12.2			15.1			15.1			
		19	THC	46.8	46.8	46.8	44.7	44.7	44.7	41.7	41.7	41.7	34.5	34.5	36.9	34.5	34.5	36.8	
			SHC	26.8	33.8	40.8	26.2	33.3	40.4	25.2	32.4	39.6	22.5	29.7	36.9	22.5	29.7	36.8	
			kW	10.0			11.2			12.5			15.4			15.4			
		22	THC	50.4	50.4	50.4	48.2	48.2	48.2	45.9	45.9	45.9	39.5	39.5	39.5	39.4	39.4	39.4	
			SHC	19.3	26.2	33.1	18.6	25.6	32.5	17.9	24.9	32.0	15.8	23.0	30.3	15.8	23.0	30.2	
			kW	10.2			11.4			12.8			16.0			16.0			
		24	THC	–	52.8	52.8	–	50.5	50.5	–	48.0	48.0	–	42.7	42.7	–	42.7	42.7	
			SHC	–	20.4	28.0	–	19.7	27.3	–	18.9	26.3	–	17.3	24.6	–	17.2	24.6	
			kW	10.4			11.6			13.0			16.2			16.2			
2655 L/s	EAT (wb)	14	THC	43.5	43.5	49.3	41.6	41.6	47.2	39.2	39.2	44.4	33.6	33.6	38.2	33.6	33.6	38.1	
			SHC	37.7	43.5	49.3	36.0	41.6	47.2	33.9	39.2	44.4	29.1	33.6	38.2	29.1	33.6	38.1	
			kW	9.8			11.0			12.3			15.3			15.3			
		17	THC	43.9	43.9	49.8	41.9	41.9	48.3	39.2	39.2	46.2	33.7	33.7	39.7	33.6	33.6	39.7	
			SHC	34.9	42.4	49.8	33.7	41.0	48.3	32.1	39.2	46.2	27.6	33.7	39.7	27.6	33.6	39.7	
			kW	9.8			11.0			12.3			15.3			15.3			
		19	THC	47.5	47.5	47.5	45.4	45.4	45.4	42.5	42.5	42.5	35.2	35.2	39.6	35.2	35.2	39.6	
			SHC	27.9	35.6	43.3	27.4	35.2	43.0	26.5	34.4	42.4	23.7	31.7	39.6	23.7	31.7	39.6	
			kW	10.0			11.2			12.6			15.5			15.6			
		22	THC	51.0	51.0	51.0	48.8	48.8	48.8	46.5	46.5	46.5	40.1	40.1	40.1	40.1	40.1	40.1	
			SHC	19.6	27.1	34.6	19.0	26.5	34.1	18.3	26.0	33.6	16.4	24.3	32.3	16.4	24.3	32.3	
			kW	10.3			11.5			12.8			16.0			16.0			
		24	THC	–	53.4	53.4	–	51.0	51.0	–	48.4	48.4	–	43.1	43.1	–	43.1	43.1	
			SHC	–	20.9	29.1	–	20.2	28.3	–	19.3	27.3	–	17.8	25.8	–	17.8	25.8	
			kW	10.4			11.6			13.0			16.3			16.3			
2950 L/s	EAT (wb)	14	THC	44.7	44.7	50.7	43.0	43.0	48.7	40.5	40.5	46.0	34.8	34.8	39.5	34.8	34.8	39.5	
			SHC	38.7	44.7	50.7	37.2	43.0	48.7	35.1	40.5	46.0	30.2	34.8	39.5	30.1	34.8	39.5	
			kW	9.9			11.1			12.5			15.5			15.5			
		17	THC	44.8	44.8	52.0	43.0	43.0	50.8	40.6	40.6	47.9	34.8	34.8	41.1	34.8	34.8	41.1	
			SHC	36.2	44.1	52.0	35.2	43.0	50.8	33.3	40.6	47.9	28.6	34.8	41.1	28.6	34.8	41.1	
			kW	9.9			11.1			12.5			15.5			15.5			
		19	THC	48.1	48.1	48.1	46.0	46.0	46.0	43.1	43.1	45.0	35.8	35.8	42.0	35.8	35.8	42.0	
			SHC	28.9	37.3	45.6	28.4	36.9	45.4	27.7	36.3	45.0	24.8	33.4	42.0	24.8	33.4	42.0	
			kW	10.1			11.3			12.6			15.7			15.7			
		22	THC	51.5	51.5	51.5	49.3	49.3	49.3	46.8	46.8	46.8	40.6	40.6	40.6	40.6	40.6	40.6	
			SHC	20.0	28.1	36.1	19.3	27.4	35.6	18.6	26.9	35.1	16.9	25.5	34.2	16.9	25.5	34.2	
			kW	10.3			11.5			12.9			16.0			16.1			
		24	THC	–	53.8	53.8	–	51.4	51.4	–	48.7	48.7	–	43.4	43.4	–	43.4	43.4	
			SHC	–	21.3	30.0	–	20.6	29.2	–	19.8	28.3	–	18.3	26.9	–	18.3	26.9	
			kW	10.5			11.7			13.0			16.3			16.3			

Table 20 – COOLING CAPACITIES (MBH) 2-STAGE COOLING ENGLISH

50TC–D16				AMBIENT TEMPERATURE °F													
				85			95			105			115			125		
				EAT (db)			EAT (db)			EAT (db)			EAT (db)			EAT (db)		
				75	80	85	75	80	85	75	80	85	75	80	85	75	80	85
3750 Cfm	EAT (wb)	58	THC	129.3	129.3	145.8	122.7	122.7	139.1	114.8	114.8	130.2	98.4	98.4	111.6	98.4	98.4	111.6
			SHC	111.3	128.6	145.8	106.2	122.7	139.1	99.4	114.8	130.2	85.2	98.4	111.6	85.1	98.4	111.6
			kW		9.4			10.4			11.6			14.6			14.6	
		62	THC	137.1	137.1	139	128.7	128.7	134.9	118.5	118.5	129.6	99.1	99.1	115	99	99	114.9
			SHC	101.1	120	139	97.2	116.1	134.9	92.3	111	129.6	80.2	97.6	115	80.1	97.5	114.9
			kW		9.6			10.6			11.8			14.6			14.6	
		67	THC	151.8	151.8	151.8	144.3	144.3	144.3	134.2	134.2	134.2	111.2	111.2	111.2	111.1	111.1	111.1
			SHC	82.5	101.4	120.2	79.7	98.7	117.7	75.7	94.7	113.7	66.8	85.8	104.8	66.8	85.8	104.8
			kW		9.9			11.1			12.3			15.1			15.1	
		72	THC	164.9	164.9	164.9	158.4	158.4	158.4	150.1	150.1	150.1	127.9	127.9	127.9	127.8	127.8	127.8
			SHC	62.5	81.4	100.3	60.2	79.2	98.2	57.3	76.4	95.5	49.6	68.7	87.8	49.6	68.7	87.7
			kW		10.1			11.3			12.6			15.8			15.8	
		76	THC	–	174.4	174.4	–	167.3	167.3	–	159.7	159.7	–	140.4	140.4	–	140.3	140.3
			SHC	–	65.3	86	–	63	83.6	–	60.4	80.8	–	54.1	73.9	–	54.1	73.9
			kW		10.3			11.5			12.8			16.1			16.1	
4375 Cfm	EAT (wb)	58	THC	136.9	136.9	155.3	130.2	130.2	147.7	122.1	122.1	138.5	104.8	104.8	118.8	104.7	104.7	118.8
			SHC	118.5	136.9	155.3	112.8	130.2	147.7	105.7	122.1	138.5	90.7	104.8	118.8	90.6	104.7	118.8
			kW		9.5			10.7			11.9			14.8			14.9	
		62	THC	142.1	142.1	151.8	133.5	133.5	147.7	124.1	124.1	139.7	104.9	104.9	123.7	104.8	104.8	123.6
			SHC	108.7	130.2	151.8	104.8	126.2	147.7	98.3	119	139.7	86.1	104.9	123.7	86	104.8	123.6
			kW		9.7			10.8			12.0			14.9			14.9	
		67	THC	156.3	156.3	156.3	149	149	149	138.9	138.9	138.9	114.9	114.9	115.7	114.8	114.8	115.6
			SHC	87.2	108.7	130.1	84.8	106.6	128.3	81.1	103	124.9	72	93.8	115.7	72	93.8	115.6
			kW		9.9			11.1			12.5			15.3			15.3	
		72	THC	168.9	168.9	168.9	162.1	162.1	162.1	154	154	154	131.8	131.8	131.8	131.7	131.7	131.7
			SHC	64.3	85.6	106.9	62	83.5	104.9	59.3	81.1	102.8	51.9	73.9	95.8	51.9	73.9	95.8
			kW		10.2			11.4			12.7			15.9			15.9	
		76	THC	–	177.9	177.9	–	170.3	170.3	–	162	162	–	143.6	143.6	–	143.5	143.5
			SHC	–	67.7	91.2	–	65.2	88.5	–	62.6	85.7	–	56.7	79.3	–	56.7	79.2
			kW		10.3			11.5			12.9			16.2			16.2	
5000 Cfm	EAT (wb)	58	THC	143.3	143.3	162.5	136.6	136.6	155	128.3	128.3	145.5	110.2	110.2	125	110.1	110.1	124.9
			SHC	124	143.3	162.5	118.3	136.6	155	111.1	128.3	145.5	95.4	110.2	125	95.3	110.1	124.9
			kW		9.7			10.9			12.1			15.1			15.1	
		62	THC	146	146	162.8	138.6	138.6	156.2	129.2	129.2	149.1	110.3	110.3	130.1	110.2	110.2	130
			SHC	115.1	138.9	162.8	109.8	133	156.2	104	126.5	149.1	90.5	110.3	130.1	90.4	110.2	130
			kW		9.7			11.0			12.2			15.1			15.1	
		67	THC	159.6	159.6	159.6	152.4	152.4	152.4	142.4	142.4	142.4	117.7	117.7	125.8	117.6	117.6	125.7
			SHC	91.4	115.3	139.2	89.4	113.7	138	86	110.5	135.1	76.7	101.2	125.8	76.7	101.2	125.7
			kW		10.0			11.2			12.5			15.4			15.4	
		72	THC	171.8	171.8	171.8	164.6	164.6	164.6	156.6	156.6	156.6	134.7	134.7	134.7	134.6	134.6	134.6
			SHC	65.7	89.3	112.8	63.5	87.2	110.9	61	85	109.1	54	78.6	103.3	53.9	78.6	103.2
			kW		10.2			11.4			12.8			16.0			16.0	
		76	THC	–	180.3	180.3	–	172.4	172.4	–	163.8	163.8	–	145.7	145.7	–	145.6	145.6
			SHC	–	69.7	95.7	–	67.2	93	–	64.4	89.8	–	58.9	83.9	–	58.8	83.9
			kW		10.4			11.6			13.0			16.2			16.2	
5625 Cfm	EAT (wb)	58	THC	148.4	148.4	168.3	142	142	161.1	133.6	133.6	151.6	114.8	114.8	130.2	114.7	114.7	130.1
			SHC	128.5	148.4	168.3	123	142	161.1	115.7	133.6	151.6	99.4	114.8	130.2	99.3	114.7	130.1
			kW		9.8			11.0			12.3			15.3			15.3	
		62	THC	149.7	149.7	169.9	143	143	164.9	133.7	133.7	157.8	114.9	114.9	135.5	114.8	114.8	135.4
			SHC	119.1	144.5	169.9	115	140	164.9	109.6	133.7	157.8	94.3	114.9	135.5	94.2	114.8	135.4
			kW		9.8			11.0			12.3			15.3			15.3	
		67	THC	162.1	162.1	162.1	155	155	155	145	145	145	120.1	120.1	135	120	120	135
			SHC	95.2	121.4	147.7	93.4	120.1	146.7	90.4	117.5	144.6	81	108	135	80.9	108	135
			kW		10.0			11.2			12.6			15.5			15.6	
		72	THC	174	174	174	166.6	166.6	166.6	158.5	158.5	158.5	136.9	136.9	136.9	136.8	136.8	136.8
			SHC	67	92.6	118.2	64.8	90.5	116.3	62.4	88.6	114.7	55.8	83	110.2	55.8	83	110.2
			kW		10.3			11.5			12.8			16.0			16.0	
		76	THC	–	182.2	182.2	–	174	174	–	165.2	165.2	–	147.1	147.1	–	147	147
			SHC	–	71.3	99.2	–	68.8	96.4	–	66	93.2	–	60.8	88.1	–	60.8	88.1
			kW		10.4			11.6			13.0			16.3			16.3	
6250 Cfm	EAT (wb)	58	THC	152.6	152.6	173.1	146.6	146.6	166.3	138.3	138.3	156.8	118.8	118.8	134.8	118.8	118.8	134.7
			SHC	132.1	152.6	173.1	126.9	146.6	166.3	119.7	138.3	156.8	102.9	118.8	134.8	102.8	118.8	134.7
			kW		9.9			11.1			12.5			15.5			15.5	
		62	THC	153	153	177.4	146.6	146.6	173.2	138.5	138.5	163.3	118.9	118.9	140.3	118.9	118.9	140.2
			SHC	123.5	150.5	177.4	120.1	146.6	173.2	113.6	138.5	163.3	97.6	118.9	140.3	97.5	118.9	140.2
			kW		9.9			11.1			12.5			15.5			15.5	
		67	THC	164.1	164.1	164.1	156.9	156.9	156.9	147.1	147.1	153.4	122.3	122.3	143.3	122.2	122.2	143.2
			SHC	98.7	127.2	155.6	97	126	154.9	94.4	123.9	153.4	84.7	114	143.3	84.7	113.9	143.2
			kW		10.1			11.3			12.6			15.7			15.7	
		72	THC	175.8	175.8	175.8	168.1	168.1	168.1	159.8	159.8	159.8	138.6	138.6	138.6	138.5	138.5	138.5
			SHC	68.2	95.8	123.3	65.9	93.6	121.3	63.6	91.7	119.8	57.5	87.1	116.8	57.5	87.1	116.8
			kW		10.3			11.5			12.9			16.0			16.1	
		76	THC	–	183.7	183.7	–	175.3	175.3	–	166.3	166.3	–	148.2	148.2	–	148.1	148.1
			SHC	–	72.8	102.4	–	70.2	99.5	–	67.4	96.4	–	62.5	91.8	–	62.5	91.8
			kW		10.5			11.7			13.0			16.3			16.3	

Table 21 – STATIC PRESSURE ADDERS (FACTORY OPTIONS AND/OR ACCESSORIES)

Electric Heaters

18.17 kW (5 TONS)										
CFM (in. wg)	**600**	**900**	**1200**	**1400**	**1600**	**1800**	**2000**	**2200**	**2400**	**2600**
1 Electric Heater Module	0.03	0.05	0.07	0.09	0.09	0.10	0.11	0.11	0.12	0.13
2 Electric Heater Modules	0.13	0.15	0.16	0.16	0.16	0.17	0.17	0.17	0.18	0.18

21.48 kW – 34.0 kW (6 – 10 TONS)															
CFM (in. wg)	**2250**	**2500**	**2750**	**3000**	**3250**	**3500**	**3750**	**4000**	**4250**	**4500**	**4750**	**5000**	**5250**	**5500**	**5750**	**6000**
1 Electric Heater Module	0.03	0.04	0.04	0.05	0.06	0.07	0.08	0.09	0.10	0.11	0.12	0.13	0.14	0.15	0.16	0.18
2 Electric Heater Modules	0.04	0.05	0.05	0.06	0.07	0.08	0.09	0.10	0.11	0.12	0.13	0.15	0.16	0.17	0.19	0.20

42.5 kW (12.5 TONS)												
CFM	**2813**	**3125**	**3438**	**3750**	**4063**	**4375**	**4688**	**5000**	**5313**	**5625**	**5938**	**6250**
Vertical - 1 Electric Heater Module	0.01	0.01	0.02	0.02	0.02	0.02	0.02	0.03	0.03	0.03	0.03	0.04
Vertical - 2 Electric Heater Modules	0.02	0.03	0.03	0.03	0.04	0.04	0.05	0.05	0.06	0.06	0.07	0.08
Horizontal - 1 Electric Heater Module	0.03	0.03	0.04	0.04	0.05	0.05	0.06	0.06	0.07	0.07	0.08	0.09
Horizontal - 2 Electric Heater Modules	0.02	0.03	0.03	0.04	0.04	0.04	0.05	0.05	0.06	0.06	0.07	0.08

GENERAL FAN PERFORMANCE NOTES:

1. Interpolation is permissible. Do not extrapolate.
2. External static pressure is the static pressure difference between the return duct and the supply duct plus the static pressure caused by any FIOPs or accessories.
3. Tabular data accounts for pressure loss due to clean filters, unit casing, and wet coils. Factory options and accessories may add static pressure losses, as shown in Table 21. Selection software is available, through your salesperson, to help you select the best motor/drive combination for your application.
4. The Fan Performance tables offer motor/drive recommendations. In cases when two motor/drive combinations would work, Carrier recommends the lower horsepower option.
5. For information on the electrical properties of Carrier motors, please see the Electrical information section of this book.
6. For more information on the performance limits of Carrier motors, see the application data section of this book.

FAN PERFORMANCE

Table 22 – 50TC-*07 **HORIZONTAL SUPPLY** **SI**

L/S	AVAILABLE EXTERNAL STATIC PRESSURE (Pa)									
	50		100		150		200		250	
	RPM	kW	RPM	kW	RPM	kW	RPM	kW	RPM	kW
708	725	0.25	840	0.35	937	0.45	1023	0.56	1101	0.67
767	765	0.30	876	0.40	970	0.51	1054	0.62	1131	0.74
826	806	0.36	912	0.47	1004	0.58	1087	0.70	1162	0.83
885	847	0.42	950	0.54	1039	0.66	1120	0.78	1194	0.92
944	889	0.50	988	0.62	1075	0.75	1154	0.88	1226	1.01
1003	931	0.58	1027	0.71	1112	0.84	1189	0.98	1260	1.12
1062	974	0.67	1067	0.81	1149	0.95	1224	1.09	1294	1.24
1121	1018	0.77	1107	0.92	1187	1.06	1261	1.21	1329	1.37
1180	1061	0.88	1148	1.03	1226	1.19	1297	1.35	1364	1.51

L/S	AVAILABLE EXTERNAL STATIC PRESSURE (Pa)									
	300		350		400		450		500	
	RPM	kW	RPM	kW	RPM	kW	RPM	kW	RPM	kW
708	1172	0.79	1239	0.91	1302	1.04	1361	1.18	1418	1.32
767	1201	0.87	1267	1.00	1329	1.13	1388	1.27	1444	1.42
826	1231	0.96	1296	1.09	1358	1.23	1416	1.37	1472	1.52
885	1262	1.05	1326	1.19	1387	1.34	1445	1.48	1499	1.64
944	1294	1.16	1357	1.30	1417	1.45	1474	1.60	1528	1.76
1003	1326	1.27	1388	1.42	1447	1.58	1504	1.73	–	–
1062	1359	1.39	1420	1.55	1479	1.71	–	–	–	–
1121	1393	1.53	1453	1.69	–	–	–	–	–	–
1180	1427	1.67	–	–	–	–	–	–	–	–

Standard static – 858–1215, 1.4 HP
Mid–static – not available
High static – 1211–1568, 2.4 max HP
– Not Applicable

Table 23 – 50TC-*07 **VERTICAL SUPPLY** **SI**

L/S	AVAILABLE EXTERNAL STATIC PRESSURE (Pa)									
	50		100		150		200		250	
	RPM	kW	RPM	kW	RPM	kW	RPM	kW	RPM	kW
708	794	0.30	902	0.41	993	0.52	1074	0.63	1147	0.75
767	840	0.37	945	0.48	1034	0.60	1113	0.72	1185	0.84
826	888	0.44	988	0.56	1075	0.68	1153	0.81	1223	0.94
885	936	0.52	1033	0.65	1117	0.78	1193	0.92	1263	1.05
944	984	0.61	1078	0.75	1160	0.89	1235	1.03	1303	1.18
1003	1033	0.71	1124	0.86	1204	1.01	1277	1.16	1343	1.31
1062	1083	0.83	1170	0.98	1248	1.14	1319	1.30	1385	1.46
1121	1133	0.95	1217	1.12	1293	1.28	1363	1.45	1427	1.62
1180	1183	1.09	1265	1.27	1339	1.44	1406	1.62	1470	1.79

L/S	AVAILABLE EXTERNAL STATIC PRESSURE (Pa)									
	300		350		400		450		500	
	RPM	kW	RPM	kW	RPM	kW	RPM	kW	RPM	kW
708	1214	0.87	1277	0.99	1336	1.12	1392	1.25	1445	1.38
767	1251	0.97	1313	1.10	1371	1.23	1427	1.37	1479	1.51
826	1289	1.08	1350	1.21	1407	1.35	1462	1.50	1514	1.64
885	1327	1.20	1387	1.34	1444	1.49	1498	1.64	1550	1.79
944	1366	1.33	1426	1.48	1482	1.63	1535	1.79	–	–
1003	1406	1.47	1464	1.63	1520	1.79	–	–	–	–
1062	1446	1.62	1504	1.79	–	–	–	–	–	–
1121	1487	1.79	–	–	–	–	–	–	–	–
1180	–	–	–	–	–	–	–	–	–	–

Standard static – 858–1215, 1.4 HP
Mid–static – not available
High static – 1211–1568, 2.4 max HP
– Not Applicable

FAN PERFORMANCE (cont.)

Table 24 – 50TC-*08 **HORIZONTAL SUPPLY** **SI**

L/S	AVAILABLE EXTERNAL STATIC PRESSURE (Pa)									
	50		100		150		200		250	
	RPM	kW	RPM	kW	RPM	kW	RPM	kW	RPM	kW
850	415	0.21	510	0.34	588	0.48	655	0.64	715	0.80
920	431	0.24	525	0.38	601	0.53	668	0.69	727	0.86
991	448	0.28	540	0.43	615	0.58	681	0.75	740	0.93
1062	465	0.32	555	0.48	629	0.64	694	0.82	753	1.00
1133	483	0.37	571	0.53	644	0.70	708	0.89	766	1.08
1203	501	0.42	587	0.59	659	0.77	722	0.96	779	1.16
1274	519	0.48	603	0.66	674	0.85	737	1.04	793	1.25
1345	538	0.54	620	0.73	689	0.93	751	1.13	807	1.34
1416	557	0.61	637	0.81	705	1.01	766	1.23	822	1.45

L/S	AVAILABLE EXTERNAL STATIC PRESSURE (Pa)									
	300		350		400		450		500	
	RPM	kW	RPM	kW	RPM	kW	RPM	kW	RPM	kW
850	770	0.98	821	1.16	868	1.35	913	1.55	955	1.76
920	782	1.04	832	1.23	879	1.43	924	1.64	966	1.85
991	794	1.12	844	1.31	891	1.52	935	1.73	977	1.95
1062	806	1.19	856	1.40	903	1.61	947	1.82	988	2.05
1133	819	1.28	868	1.49	915	1.70	958	1.93	1000	2.16
1203	832	1.37	881	1.58	927	1.81	971	2.04	1012	2.27
1274	845	1.46	894	1.68	940	1.91	983	2.15	1024	2.39
1345	859	1.57	907	1.79	953	2.03	995	2.27	1036	2.52
1416	873	1.67	921	1.91	966	2.15	1008	2.40	1049	2.66

Standard static – 858–1215, 1.4 HP
Mid–static – 606–837, 2.4 HP
High static – 1211–1568, 2.4 max HP
– Not Applicable

Table 25 – 50TC-*08 **VERTICAL SUPPLY** **SI**

L/S	AVAILABLE EXTERNAL STATIC PRESSURE (Pa)									
	50		100		150		200		250	
	RPM	kW	RPM	kW	RPM	kW	RPM	kW	RPM	kW
850	446	0.24	534	0.37	609	0.52	676	0.68	736	0.85
920	467	0.29	552	0.42	625	0.58	690	0.74	750	0.92
991	489	0.34	571	0.48	642	0.64	706	0.81	764	0.99
1062	511	0.39	591	0.54	660	0.71	722	0.88	779	1.07
1133	534	0.46	611	0.61	678	0.79	739	0.97	795	1.16
1203	558	0.53	631	0.69	697	0.87	756	1.06	811	1.26
1274	581	0.61	652	0.78	716	0.96	774	1.16	828	1.36
1345	605	0.69	674	0.87	736	1.06	792	1.27	845	1.48
1416	630	0.79	696	0.98	756	1.17	811	1.38	863	1.60

L/S	AVAILABLE EXTERNAL STATIC PRESSURE (Pa)									
	300		350		400		450		500	
	RPM	kW	RPM	kW	RPM	kW	RPM	kW	RPM	kW
850	791	1.04	843	1.23	892	1.44	938	1.66	981	1.89
920	804	1.11	855	1.31	903	1.52	949	1.74	992	1.97
991	818	1.19	868	1.39	915	1.61	961	1.83	1003	2.07
1062	832	1.27	882	1.48	928	1.70	973	1.93	1015	2.17
1133	847	1.37	896	1.58	942	1.81	986	2.04	1028	2.29
1203	862	1.47	910	1.69	956	1.92	999	2.16	1041	2.41
1274	878	1.58	926	1.81	971	2.04	1013	2.29	1055	2.54
1345	895	1.70	941	1.93	986	2.18	1028	2.43	1069	2.68
1416	912	1.83	958	2.07	1001	2.32	1043	2.57	1083	2.84

Standard static – 858–1215, 1.4 HP
Mid–static – 606–837, 2.4 HP
High static – 1211–1568, 2.4 max HP
– Not Applicable

FAN PERFORMANCE (cont.)

Table 26 – 50TC-*09 **HORIZONTAL SUPPLY** **SI**

L/S	AVAILABLE EXTERNAL STATIC PRESSURE (Pa)									
	50		100		150		200		250	
	RPM	kW	RPM	kW	RPM	kW	RPM	kW	RPM	kW
1038	427	0.21	514	0.29	592	0.39	664	0.49	731	0.59
1109	444	0.24	527	0.33	602	0.43	672	0.53	737	0.64
1180	462	0.28	541	0.37	614	0.48	681	0.58	744	0.69
1251	480	0.32	556	0.42	626	0.53	691	0.64	753	0.75
1321	498	0.36	571	0.47	639	0.58	702	0.70	762	0.82
1392	517	0.41	587	0.52	652	0.64	714	0.76	772	0.88
1463	536	0.47	603	0.58	666	0.70	726	0.83	783	0.96
1534	555	0.53	620	0.65	681	0.77	739	0.90	794	1.03
1605	575	0.60	637	0.72	696	0.85	752	0.98	806	1.12

L/S	AVAILABLE EXTERNAL STATIC PRESSURE (Pa)									
	300		350		400		450		500	
	RPM	kW	RPM	kW	RPM	kW	RPM	kW	RPM	kW
1038	793	0.70	853	0.81	909	0.92	963	1.04	1014	1.17
1109	798	0.75	856	0.87	911	0.99	964	1.11	1015	1.24
1180	804	0.81	861	0.93	915	1.05	967	1.18	1017	1.31
1251	811	0.87	866	1.00	919	1.13	970	1.26	1019	1.39
1321	819	0.94	873	1.07	925	1.20	975	1.34	1023	1.48
1392	827	1.01	880	1.15	931	1.28	980	1.42	1028	1.57
1463	837	1.09	889	1.23	938	1.37	986	1.51	1033	1.66
1534	847	1.17	897	1.31	946	1.46	993	1.61	1039	1.76
1605	858	1.26	907	1.41	955	1.55	1001	1.71	1046	1.86

Standard static – 858–1215, 1.4 HP
Mid–static – 606–837, 2.4 HP
High static – 1211–1568, 2.4 max HP
– Not Applicable

Table 27 – 50TC-*09 **VERTICAL SUPPLY** **SI**

L/S	AVAILABLE EXTERNAL STATIC PRESSURE (Pa)									
	50		100		150		200		250	
	RPM	kW	RPM	kW	RPM	kW	RPM	kW	RPM	kW
1038	451	0.23	531	0.31	599	0.40	660	0.48	715	0.57
1109	470	0.27	547	0.36	614	0.45	673	0.54	728	0.63
1180	489	0.31	564	0.40	629	0.50	688	0.60	741	0.69
1251	509	0.36	581	0.46	645	0.56	702	0.66	755	0.76
1321	528	0.41	599	0.51	661	0.62	718	0.73	769	0.83
1392	549	0.46	617	0.58	678	0.69	733	0.80	784	0.91
1463	569	0.52	636	0.64	695	0.76	749	0.88	799	1.00
1534	590	0.59	655	0.72	713	0.84	766	0.96	815	1.09
1605	611	0.67	674	0.80	730	0.93	782	1.06	831	1.19

L/S	AVAILABLE EXTERNAL STATIC PRESSURE (Pa)									
	300		350		400		450		500	
	RPM	kW	RPM	kW	RPM	kW	RPM	kW	RPM	kW
1038	765	0.66	813	0.75	857	0.84	900	0.93	940	1.02
1109	778	0.72	825	0.81	869	0.91	911	1.01	951	1.10
1180	791	0.79	837	0.89	881	0.99	922	1.09	962	1.19
1251	804	0.86	850	0.97	893	1.07	934	1.18	973	1.29
1321	817	0.94	863	1.05	905	1.16	946	1.27	985	1.39
1392	831	1.03	876	1.14	918	1.26	959	1.37	997	1.49
1463	846	1.12	890	1.24	932	1.36	972	1.48	1010	1.60
1534	861	1.21	904	1.34	945	1.46	985	1.59	1023	1.72
1605	876	1.32	919	1.45	960	1.58	998	1.71	1036	1.84

Standard static – 858–1215, 1.4 HP
Mid–static – 606–837, 2.4 HP
High static – 1211–1568, 2.4 max HP
– Not Applicable

FAN PERFORMANCE (cont.)

Table 28 – 50TC-*12 HORIZONTAL SUPPLY SI

L/S	AVAILABLE EXTERNAL STATIC PRESSURE (Pa)									
	50		100		150		200		250	
	RPM	kW	RPM	kW	RPM	kW	RPM	kW	RPM	kW
1133	450	0.25	532	0.35	606	0.44	675	0.55	739	0.66
1203	468	0.29	546	0.39	618	0.49	684	0.60	747	0.71
1274	486	0.33	561	0.44	630	0.54	695	0.66	756	0.77
1345	504	0.38	576	0.49	643	0.60	706	0.72	765	0.84
1416	523	0.43	592	0.54	657	0.66	718	0.78	775	0.91
1487	542	0.49	609	0.60	671	0.73	730	0.85	786	0.98
1557	562	0.55	626	0.67	686	0.80	743	0.93	798	1.06
1628	581	0.62	643	0.74	701	0.87	757	1.01	810	1.15
1699	601	0.69	661	0.82	717	0.96	771	1.09	823	1.24

L/S	AVAILABLE EXTERNAL STATIC PRESSURE (Pa)									
	300		350		400		450		500	
	RPM	kW	RPM	kW	RPM	kW	RPM	kW	RPM	kW
1133	800	0.77	858	0.89	912	1.01	965	1.13	1015	1.26
1203	806	0.83	863	0.95	916	1.08	968	1.21	1018	1.34
1274	813	0.90	869	1.02	921	1.15	972	1.28	1021	1.42
1345	822	0.96	875	1.09	927	1.23	977	1.37	1024	1.51
1416	830	1.04	883	1.17	934	1.31	982	1.45	1029	1.60
1487	840	1.12	891	1.26	941	1.40	989	1.54	1035	1.69
1557	850	1.20	901	1.34	949	1.49	996	1.64	1041	1.79
1628	861	1.29	911	1.44	958	1.59	1004	1.74	1048	1.90
1699	873	1.39	921	1.54	967	1.69	1012	1.85	1056	2.01

Standard static – 858–1215, 1.4 HP
Mid–static – 606–837, 2.4 HP
High static – 1211–1568, 2.4 max HP
– Not Applicable

Table 29 – 50TC-*12 VERTICAL SUPPLY SI

L/S	AVAILABLE EXTERNAL STATIC PRESSURE (Pa)									
	50		100		150		200		250	
	RPM	kW	RPM	kW	RPM	kW	RPM	kW	RPM	kW
1133	476	0.28	553	0.37	619	0.46	678	0.56	732	0.65
1203	495	0.32	570	0.42	634	0.52	693	0.62	746	0.71
1274	515	0.37	587	0.47	650	0.58	707	0.68	760	0.79
1345	535	0.42	605	0.53	667	0.64	723	0.75	774	0.86
1416	556	0.48	623	0.60	684	0.71	738	0.83	789	0.94
1487	576	0.55	642	0.67	701	0.79	755	0.91	804	1.03
1557	597	0.62	661	0.74	718	0.87	771	0.99	820	1.12
1628	618	0.69	680	0.82	736	0.96	788	1.09	836	1.22
1699	639	0.77	700	0.91	754	1.05	805	1.19	8.52	1.32

L/S	AVAILABLE EXTERNAL STATIC PRESSURE (Pa)									
	300		350		400		450		500	
	RPM	kW	RPM	kW	RPM	kW	RPM	kW	RPM	kW
1133	782	0.74	829	0.84	873	0.94	914	1.03	954	1.13
1203	795	0.81	841	0.91	885	1.02	926	1.12	965	1.22
1274	808	0.89	854	1.00	897	1.10	938	1.21	977	1.32
1345	822	0.97	867	1.08	910	1.19	950	1.31	989	1.42
1416	836	1.06	881	1.17	923	1.29	963	1.41	1001	1.53
1487	851	1.15	895	1.27	936	1.39	976	1.52	1014	1.64
1557	866	1.25	909	1.37	950	1.50	989	1.63	1027	1.76
1628	881	1.35	924	1.48	964	1.62	1003	1.75	1040	1.88
1699	897	1.46	939	160	979	1.74	1017	1.88	1054	2.02

Standard static – 858–1215, 1.4 HP
Mid–static – 606–837, 2.4 HP
High static – 1211–1568, 2.4 max HP
– Not Applicable

FAN PERFORMANCE (cont.)

Table 30 – 50TC-*14 **HORIZONTAL SUPPLY** **SI**

L/S	AVAILABLE EXTERNAL STATIC PRESSURE (Pa)									
	50		100		150		200		250	
	RPM	kW	RPM	kW	RPM	kW	RPM	kW	RPM	kW
1770	**621**	**0.77**	**679**	**0.90**	734	1.04	786	1.19	837	1.34
1917	**663**	**0.95**	717	1.10	769	1.25	818	1.40	866	1.56
2065	706	1.17	757	1.32	805	1.48	852	1.64	897	1.81
2212	749	1.41	797	1.58	843	1.74	887	1.92	930	2.09
2360	793	1.69	838	1.86	881	2.04	923	2.22	965	2.41
2507	837	2.00	880	2.19	921	2.38	961	2.57	1000	2.76
2655	882	2.35	922	2.55	961	2.75	999	2.95	1037	3.15
2802	926	2.74	964	2.95	1001	3.16	1038	3.37	–	–
2950	971	3.18	1007	3.39	–	–	–	–	–	–

L/S	AVAILABLE EXTERNAL STATIC PRESSURE (Pa)									
	300		350		400		450		500	
	RPM	kW	RPM	kW	RPM	kW	RPM	kW	RPM	kW
1770	885	1.49	932	1.64	978	1.80	1022	1.97	1065	2.13
1917	912	1.72	957	1.88	1001	2.05	1043	2.22	1084	2.40
2065	941	1.98	984	2.15	1026	2.33	1066	2.51	1106	2.70
2212	972	2.27	1013	2.46	1053	2.64	1092	2.83	1130	3.03
2360	1005	2.60	1044	2.79	1082	2.99	1119	3.19	1156	3.39
2507	1038	2.96	1076	3.16	1113	3.37	–	–	–	–
2655	1073	3.36	–	–	–	–	–	–	–	–
2802	–	–	–	–	–	–	–	–	–	–
2950	–	–	–	–	–	–	–	–	–	–

Standard static – 698–893, 1.8 kW
Mid–static – 838–1084, 2.3 kW
High static – 1022–1240, 2.9 max kW
– Not Applicable

Table 31 – 50TC-*14 **VERTICAL SUPPLY** **SI**

L/S	AVAILABLE EXTERNAL STATIC PRESSURE (Pa)									
	50		100		150		200		250	
	RPM	kW	RPM	kW	RPM	kW	RPM	kW	RPM	kW
1770	661	0.86	719	1.01	773	1.15	822	1.29	869	1.44
1917	706	1.07	761	1.22	812	1.38	860	1.54	904	1.69
2065	752	1.31	804	1.48	852	1.64	898	1.81	941	1.98
2212	798	1.58	847	1.76	894	1.94	937	2.12	979	2.30
2360	844	1.89	891	2.09	936	2.28	978	2.47	1018	2.66
2507	891	2.24	936	2.45	978	2.65	1019	2.86	1057	3.06
2655	938	2.63	981	2.85	1022	3.07	1060	3.29	1097	3.50
2802	986	3.07	1026	3.30	–	–	–	–	–	–
2950	–	–	–	–	–	–	–	–	–	–

L/S	AVAILABLE EXTERNAL STATIC PRESSURE (Pa)									
	300		350		400		450		500	
	RPM	kW	RPM	kW	RPM	kW	RPM	kW	RPM	kW
1770	912	1.58	954	1.72	994	1.87	1031	2.01	1068	2.16
1917	947	1.85	987	2.00	1025	2.16	1062	2.31	1098	2.47
2065	982	2.15	1021	2.31	1058	2.48	1094	2.65	1129	2.81
2212	1018	2.48	1056	2.66	1093	2.84	1128	3.02	1162	3.20
2360	1056	2.85	1093	3.04	1128	3.23	1162	3.42	–	–
2507	1094	3.26	1130	3.47	–	–	–	–	–	–
2655	–	–	–	–	–	–	–	–	–	–
2802	–	–	–	–	–	–	–	–	–	–
2950	–	–	–	–	–	–	–	–	–	–

Standard static – 698–893, 1.8 kW
Mid–static – 838–1084, 2.3 kW
High static – 1022–1240, 2.9 max kW
– Not Applicable

FAN PERFORMANCE (cont.)

Table 32 – 50TC-*16 **HORIZONTAL SUPPLY** **SI**

L/s	AVAILABLE EXTERNAL STATIC PRESSURE (Pa)									
	50		100		150		200		250	
	RPM	kW	RPM	kW	RPM	kW	RPM	kW	RPM	kW
1770	**377**	**0.38**	**449**	**0.51**	516	0.67	579	0.84	640	1.03
1917	**464**	**0.45**	464	0.60	527	0.76	587	0.94	645	1.13
2065	**480**	**0.54**	480	0.70	540	0.86	597	1.05	652	1.24
2212	**497**	**0.64**	497	0.81	554	0.98	608	1.17	660	1.37
2360	514	0.75	514	0.93	569	1.11	620	1.30	670	1.51
2507	532	0.87	532	1.06	584	1.25	634	1.45	681	1.66
2655	550	1.01	550	1.21	600	1.41	648	1.62	694	1.84
2802	568	1.16	568	1.37	617	1.58	663	1.80	707	2.02
2950	587	1.32	587	1.54	634	1.76	678	1.99	721	2.22

L/s	AVAILABLE EXTERNAL STATIC PRESSURE (Pa)									
	300		350		400		450		500	
	RPM	kW	RPM	kW	RPM	kW	RPM	kW	RPM	kW
1770	697	1.24	751	1.47	802	1.71	850	1.96	*895*	*2.21*
1917	700	1.34	753	1.57	803	1.81	851	2.07	*896*	*2.33*
2065	705	1.46	756	1.69	805	1.93	852	2.19	*897*	*2.46*
2212	711	1.59	761	1.82	808	2.07	854	2.33	*899*	*2.60*
2360	719	1.73	766	1.96	812	2.21	*857*	*2.48*	*901*	*2.75*
2507	728	1.89	773	2.13	818	2.38	*861*	*2.64*	*904*	*2.92*
2655	738	2.06	782	2.31	825	2.56	*867*	*2.83*	*908*	*3.11*
2802	750	2.26	792	2.50	833	2.76	*873*	*3.03*	*913*	*3.31*
2950	762	2.47	803	2.72	842	2.98	*881*	*3.25*	*920*	*3.54*

Table 33 – 50TC-*16 **VERTICAL SUPPLY** **SI**

L/s	AVAILABLE EXTERNAL STATIC PRESSURE (Pa)									
	50		100		150		200		250	
	RPM	kW	RPM	kW	RPM	kW	RPM	kW	RPM	kW
1770	**379**	**0.38**	**452**	**0.55**	521	0.74	588	0.97	652	1.23
1917	**467**	**0.45**	467	0.63	532	0.83	595	1.06	656	1.31
2065	**483**	**0.53**	483	0.72	544	0.93	603	1.16	661	1.42
2212	**500**	**0.63**	500	0.83	558	1.04	614	1.27	668	1.53
2360	517	0.73	517	0.94	572	1.16	625	1.40	677	1.66
2507	534	0.84	534	1.07	588	1.30	638	1.54	688	1.81
2655	552	0.97	552	1.21	603	1.45	652	1.70	699	1.97
2802	570	1.11	570	1.36	620	1.61	667	1.87	712	2.14
2950	589	1.26	589	1.52	637	1.78	682	2.05	725	2.34

L/s	AVAILABLE EXTERNAL STATIC PRESSURE (Pa)									
	300		350		400		450		500	
	RPM	kW	RPM	kW	RPM	kW	RPM	kW	RPM	kW
1770	712	1.51	768	1.81	821	2.14	*870*	*2.47*	*917*	*2.82*
1917	714	1.60	769	1.91	822	2.24	*871*	*2.58*	*918*	*2.94*
2065	717	1.70	771	2.01	822	2.34	*871*	*2.69*	*918*	*3.06*
2212	722	1.82	774	2.13	824	2.46	*872*	*2.81*	*918*	*3.18*
2360	728	1.95	778	2.26	827	2.59	*874*	*2.94*	*919*	*3.32*
2507	736	2.09	784	2.40	831	2.74	*876*	*3.09*	*921*	*3.46*
2655	746	2.26	791	2.57	836	2.90	*880*	*3.25*	*923*	*3.63*
2802	756	2.44	800	2.75	843	3.08	*885*	*3.43*	–	–
2950	768	2.63	810	2.95	851	3.28	*892*	*3.64*	–	–

Standard static – 698–893, 1.8 kW
Mid–static – 838–1084, 2.3 kW
High static – 1022–1240, 2.9 max kW
– Not Applicable
Italics Requires high static drive package with KR11HY232 (1VP65) motor pulley.

FAN PERFORMANCE (cont.)

Table 34 – 50TC-*07 **HORIZONTAL SUPPLY** **ENGLISH**

CFM	AVAILABLE EXTERNAL STATIC PRESSURE (IN. WG)									
	0.2		0.4		0.6		0.8		1.0	
	RPM	BHP	RPM	BHP	RPM	BHP	RPM	BHP	RPM	BHP
1500	725	0.33	840	0.46	937	0.60	1023	0.75	1101	0.90
1625	765	0.40	876	0.54	970	0.68	1054	0.84	1131	1.00
1750	806	0.48	912	0.63	1004	0.78	1087	0.94	1162	1.11
1875	847	0.57	950	0.72	1039	0.88	1120	1.05	1194	1.23
2000	889	0.66	988	0.83	1075	1.00	1154	1.18	1226	1.36
2125	931	0.78	1027	0.95	1112	1.13	1189	1.31	1260	1.50
2250	974	0.90	1067	1.08	1149	1.27	1224	1.46	1294	1.66
2375	1018	1.03	1107	1.23	1187	1.43	1261	1.63	1329	1.84
2500	1061	1.19	1148	1.39	1226	1.59	1297	1.81	1364	2.02

CFM	AVAILABLE EXTERNAL STATIC PRESSURE (IN. WG)									
	1.2		1.4		1.6		1.8		2.0	
	RPM	BHP	RPM	BHP	RPM	BHP	RPM	BHP	RPM	BHP
1500	1172	1.06	1239	1.23	1302	1.40	1361	1.58	1418	1.77
1625	1201	1.16	1267	1.34	1329	1.52	1388	1.71	1444	1.90
1750	1231	1.28	1296	1.46	1358	1.65	1416	1.84	1472	2.04
1875	1262	1.41	1326	1.60	1387	1.79	1445	1.99	1499	2.20
2000	1294	1.55	1357	1.74	1417	1.95	1474	2.15	1528	2.36
2125	1326	1.70	1388	1.90	1447	2.11	1504	2.33	–	–
2250	1359	1.87	1420	2.08	1479	2.29	–	–	–	–
2375	1393	2.05	1453	2.27	–	–	–	–	–	–
2500	1427	2.24	–	–	–	–	–	–	–	–

Standard static – 858–1215, 1.4 HP
Mid–static – not available
High static – 1211–1568, 2.4 max HP
– Not Applicable

Table 35 – 50TC-*07 **VERTICAL SUPPLY** **ENGLISH**

CFM	AVAILABLE EXTERNAL STATIC PRESSURE (IN. WG)									
	0.2		0.4		0.6		0.8		1.0	
	RPM	BHP	RPM	BHP	RPM	BHP	RPM	BHP	RPM	BHP
1500	794	0.41	902	0.55	993	0.69	1074	0.85	1147	1.00
1625	840	0.49	945	0.64	1034	0.80	1113	0.96	1185	1.13
1750	888	0.59	988	0.75	1075	0.92	1153	1.09	1223	1.26
1875	936	0.70	1033	0.87	1117	1.05	1193	1.23	1263	1.41
2000	984	0.82	1078	1.00	1160	1.19	1235	1.39	1303	1.58
2125	1033	0.96	1124	1.15	1204	1.35	1277	1.56	1343	1.76
2250	1083	1.11	1170	1.32	1248	1.53	1319	1.74	1385	1.96
2375	1133	1.28	1217	1.50	1293	1.72	1363	1.95	1427	2.17
2500	1183	1.47	1265	1.70	1339	1.93	1406	2.17	1470	2.41

CFM	AVAILABLE EXTERNAL STATIC PRESSURE (IN. WG)									
	1.2		1.4		1.6		1.8		2.0	
	RPM	BHP	RPM	BHP	RPM	BHP	RPM	BHP	RPM	BHP
1500	1214	1.16	1277	1.33	1336	1.50	1392	1.67	1445	1.85
1625	1251	1.30	1313	1.47	1371	1.65	1427	1.83	1479	2.02
1750	1289	1.44	1350	1.63	1407	1.81	1462	2.01	1514	2.20
1875	1327	1.60	1387	1.80	1444	1.99	1498	2.19	1550	2.40
2000	1366	1.78	1426	1.98	1482	2.19	1535	2.40	–	–
2125	1406	1.97	1464	2.18	1520	2.40	–	–	–	–
2250	1446	2.18	1504	2.40	–	–	–	–	–	–
2375	1487	2.40	–	–	–	–	–	–	–	–
2500	–	–	–	–	–	–	–	–	–	–

Standard static – 858–1215, 1.4 HP
Mid–static – not available
High static – 1211–1568, 2.4 max HP
– Not Applicable

FAN PERFORMANCE (cont.)

Table 36 – 50TC-*08 **HORIZONTAL SUPPLY** **ENGLISH**

CFM	AVAILABLE EXTERNAL STATIC PRESSURE (IN. WG)									
	0.2		0.4		0.6		0.8		1.0	
	RPM	BHP	RPM	BHP	RPM	BHP	RPM	BHP	RPM	BHP
1800	415	0.28	510	0.46	588	0.65	655	0.85	715	1.08
1950	431	0.32	525	0.51	601	0.71	668	0.93	727	1.16
2100	448	0.38	540	0.57	615	0.78	681	1.01	740	1.25
2250	465	0.43	555	0.64	629	0.86	694	1.10	753	1.34
2400	483	0.49	571	0.71	644	0.94	708	1.19	766	1.45
2550	501	0.56	587	0.79	659	1.04	722	1.29	779	1.56
2700	519	0.64	603	0.88	674	1.14	737	1.40	793	1.68
2850	538	0.72	620	0.98	689	1.24	751	1.52	807	1.80
3000	557	0.82	637	1.08	705	1.36	766	1.64	822	1.94

CFM	AVAILABLE EXTERNAL STATIC PRESSURE (IN. WG)									
	1.2		1.4		1.6		1.8		2.0	
	RPM	BHP	RPM	BHP	RPM	BHP	RPM	BHP	RPM	BHP
1800	770	1.31	821	1.56	868	1.82	913	2.09	955	2.36
1950	782	1.40	832	1.66	879	1.92	924	2.20	966	2.49
2100	794	1.50	844	1.76	891	2.03	935	2.32	977	2.61
2250	806	1.60	856	1.87	903	2.15	947	2.45	988	2.75
2400	819	1.71	868	1.99	915	2.28	958	2.58	1000	2.89
2550	832	1.83	881	2.12	927	2.42	971	2.73	1012	3.05
2700	845	1.96	894	2.26	940	2.57	983	2.88	1024	3.21
2850	859	2.10	907	2.41	953	2.72	995	3.05	1036	3.38
3000	873	2.24	921	2.56	966	2.89	1008	3.22	1049	3.56

Standard static – 858–1215, 1.4 HP
Mid–static – 606–837, 2.4 HP
High static – 1211–1568, 2.4 max HP
– Not Applicable

Table 37 – 50TC-*08 **VERTICAL SUPPLY** **ENGLISH**

CFM	AVAILABLE EXTERNAL STATIC PRESSURE (IN. WG)									
	0.2		0.4		0.6		0.8		1.0	
	RPM	BHP	RPM	BHP	RPM	BHP	RPM	BHP	RPM	BHP
1800	446	0.33	534	0.50	609	0.70	676	0.91	736	1.14
1950	467	0.39	552	0.57	625	0.77	690	0.99	750	1.23
2100	489	0.45	571	0.64	642	0.86	706	1.08	764	1.33
2250	511	0.53	591	0.73	660	0.95	722	1.19	779	1.44
2400	534	0.61	611	0.82	678	1.05	739	1.30	795	1.56
2550	558	0.71	631	0.93	697	1.17	756	1.42	811	1.69
2700	581	0.81	652	1.04	716	1.29	774	1.55	828	1.83
2850	605	0.93	674	1.17	736	1.43	792	1.70	845	1.98
3000	630	1.06	696	1.31	756	1.58	811	1.86	863	2.15

CFM	AVAILABLE EXTERNAL STATIC PRESSURE (IN. WG)									
	1.2		1.4		1.6		1.8		2.0	
	RPM	BHP	RPM	BHP	RPM	BHP	RPM	BHP	RPM	BHP
1800	791	1.39	843	1.65	892	1.93	938	2.22	981	2.53
1950	804	1.49	855	1.76	903	2.04	949	2.34	992	2.65
2100	818	1.59	868	1.87	915	2.16	961	2.46	1003	2.78
2250	832	1.71	882	1.99	928	2.29	973	2.59	1015	2.92
2400	847	1.83	896	2.12	942	2.43	986	2.74	1028	3.07
2550	862	1.97	910	2.27	956	2.58	999	2.90	1041	3.23
2700	878	2.12	926	2.42	971	2.74	1013	3.07	1055	3.41
2850	895	2.28	941	2.59	986	2.92	1028	3.25	1069	3.60
3000	912	2.46	958	2.78	1001	3.11	1043	3.45	1083	3.80

Standard static – 858–1215, 1.4 HP
Mid–static – 606–837, 2.4 HP
High static – 1211–1568, 2.4 max HP
– Not Applicable

FAN PERFORMANCE (cont.)

Table 38 – 50TC-*09 **HORIZONTAL SUPPLY** **ENGLISH**

CFM	AVAILABLE EXTERNAL STATIC PRESSURE (IN. WG)									
	0.2		0.4		0.6		0.8		1.0	
	RPM	BHP	RPM	BHP	RPM	BHP	RPM	BHP	RPM	BHP
2200	427	0.28	514	0.39	592	0.52	664	0.65	731	0.79
2350	444	0.32	527	0.45	602	0.58	672	0.71	737	0.86
2500	462	0.37	541	0.50	614	0.64	681	0.78	744	0.93
2650	480	0.43	556	0.56	626	0.70	691	0.85	753	1.01
2800	498	0.49	571	0.63	639	0.78	702	0.93	762	1.09
2950	517	0.56	587	0.70	652	0.86	714	1.02	772	1.18
3100	536	0.63	603	0.78	666	0.94	726	1.11	783	1.28
3250	555	0.71	620	0.87	681	1.04	739	1.21	794	1.39
3400	575	0.80	637	0.96	696	1.14	752	1.31	806	1.50

CFM	AVAILABLE EXTERNAL STATIC PRESSURE (IN. WG)									
	1.2		1.4		1.6		1.8		2.0	
	RPM	BHP	RPM	BHP	RPM	BHP	RPM	BHP	RPM	BHP
2200	793	0.93	853	1.09	909	1.24	963	1.40	1014	1.57
2350	798	1.01	856	1.16	911	1.32	964	1.49	1015	1.66
2500	804	1.09	861	1.25	915	1.41	967	1.59	1017	1.76
2650	811	1.17	866	1.34	919	1.51	970	1.69	1019	1.87
2800	819	1.26	873	1.43	925	1.61	975	1.79	1023	1.98
2950	827	1.36	880	1.54	931	1.72	980	1.91	1028	2.10
3100	837	1.46	889	1.65	938	1.83	986	2.03	1033	2.23
3250	847	1.57	897	1.76	946	1.96	993	2.16	1039	2.36
3400	858	1.69	907	1.88	955	2.09	1001	2.29	1046	2.50

Standard static – 858–1215, 1.4 HP
Mid–static – 606–837, 2.4 HP
High static – 1211–1568, 2.4 max HP
– Not Applicable

Table 39 – 50TC-*09 **VERTICAL SUPPLY** **ENGLISH**

CFM	AVAILABLE EXTERNAL STATIC PRESSURE (IN. WG)									
	0.2		0.4		0.6		0.8		1.0	
	RPM	BHP	RPM	BHP	RPM	BHP	RPM	BHP	RPM	BHP
2200	451	0.31	531	0.42	599	0.53	660	0.65	715	0.76
2350	470	0.36	547	0.48	614	0.60	673	0.72	728	0.84
2500	489	0.41	564	0.54	629	0.67	688	0.80	741	0.93
2650	509	0.48	581	0.61	645	0.75	702	0.88	755	1.02
2800	528	0.54	599	0.69	661	0.83	718	0.98	769	1.12
2950	549	0.62	617	0.77	678	0.92	733	1.07	784	1.23
3100	569	0.70	636	0.86	695	1.02	749	1.18	799	1.34
3250	590	0.79	655	0.96	713	1.13	766	1.29	815	1.46
3400	611	0.89	674	1.07	730	1.24	782	1.42	831	1.59

CFM	AVAILABLE EXTERNAL STATIC PRESSURE (IN. WG)									
	1.2		1.4		1.6		1.8		2.0	
	RPM	BHP	RPM	BHP	RPM	BHP	RPM	BHP	RPM	BHP
2200	765	0.88	813	1.00	857	1.12	900	1.24	940	1.37
2350	778	0.97	825	1.09	869	1.22	911	1.35	951	1.48
2500	791	1.06	837	1.19	881	1.33	922	1.46	962	1.60
2650	804	1.16	850	1.30	893	1.44	934	1.58	973	1.72
2800	817	1.26	863	1.41	905	1.56	946	1.71	985	1.86
2950	831	1.38	876	1.53	918	1.69	959	1.84	997	2.00
3100	846	1.50	890	1.66	932	1.82	972	1.98	1010	2.15
3250	861	1.63	904	1.79	945	1.96	985	2.13	1023	2.30
3400	876	1.76	919	1.94	960	2.12	998	2.29	1036	2.47

Standard static – 858–1215, 1.4 HP
Mid–static – 606–837, 2.4 HP
High static – 1211–1568, 2.4 max HP
– Not Applicable

FAN PERFORMANCE (cont.)

Table 40 – 50TC-*12 **HORIZONTAL SUPPLY** **ENGLISH**

CFM	AVAILABLE EXTERNAL STATIC PRESSURE (IN. WG)									
	0.2		0.4		0.6		0.8		1.0	
	RPM	BHP	RPM	BHP	RPM	BHP	RPM	BHP	RPM	BHP
2400	450	0.34	532	0.46	606	0.60	675	0.74	739	0.88
2550	468	0.39	546	0.52	618	0.66	684	0.80	747	0.96
2700	486	0.45	561	0.58	630	0.73	695	0.88	756	1.04
2850	504	0.51	576	0.65	643	0.80	706	0.96	765	1.12
3000	523	0.58	592	0.73	657	0.88	718	1.05	775	1.22
3150	542	0.66	609	0.81	671	0.97	730	1.14	786	1.32
3300	562	0.74	626	0.90	686	1.07	743	1.24	798	1.42
3450	581	0.83	643	1.00	701	1.17	757	1.35	810	1.54
3600	601	0.93	661	1.10	717	1.28	771	1.47	823	1.66

CFM	AVAILABLE EXTERNAL STATIC PRESSURE (IN. WG)									
	1.2		1.4		1.6		1.8		2.0	
	RPM	BHP	RPM	BHP	RPM	BHP	RPM	BHP	RPM	BHP
2400	800	1.03	858	1.19	912	1.35	965	1.52	1015	1.69
2550	806	1.11	863	1.28	916	1.45	968	1.62	1018	1.80
2700	813	1.20	869	1.37	921	1.54	972	1.72	1021	1.90
2850	822	1.29	875	1.47	927	1.65	977	1.83	1024	2.02
3000	830	1.39	883	1.57	934	1.76	982	1.95	1029	2.14
3150	840	1.50	891	1.68	941	1.87	989	2.07	1035	2.27
3300	850	1.61	901	1.80	949	2.00	996	2.20	1041	2.40
3450	861	1.73	911	1.93	958	2.13	1004	2.34	1048	2.55
3600	873	1.86	921	2.06	967	2.27	1012	2.48	1056	2.70

Standard static – 858–1215, 1.4 HP
Mid–static – 606–837, 2.4 HP
High static – 1211–1568, 2.4 max HP
– Not Applicable

Table 41 – 50TC-*12 **VERTICAL SUPPLY** **ENGLISH**

CFM	AVAILABLE EXTERNAL STATIC PRESSURE (IN. WG)									
	0.2		0.4		0.6		0.8		1.0	
	RPM	BHP	RPM	BHP	RPM	BHP	RPM	BHP	RPM	BHP
2400	476	0.38	553	0.50	619	0.62	678	0.75	732	0.87
2550	495	0.43	570	0.56	634	0.70	693	0.83	746	0.96
2700	515	0.50	587	0.64	650	0.77	707	0.91	760	1.05
2850	535	0.57	605	0.72	667	0.86	723	1.01	774	1.15
3000	556	0.65	623	0.80	684	0.95	738	1.11	789	1.26
3150	576	0.73	642	0.89	701	1.06	755	1.22	804	1.38
3300	597	0.83	661	1.00	718	1.17	771	1.33	820	1.50
3450	618	0.93	680	1.11	736	1.28	788	1.46	836	1.63
3600	639	1.04	700	1.22	754	1.41	805	1.59	852	1.78

CFM	AVAILABLE EXTERNAL STATIC PRESSURE (IN. WG)									
	1.2		1.4		1.6		1.8		2.0	
	RPM	BHP	RPM	BHP	RPM	BHP	RPM	BHP	RPM	BHP
2400	782	1.00	829	1.13	873	1.25	914	1.39	954	1.52
2550	795	1.09	841	1.23	885	1.36	926	1.50	965	1.64
2700	808	1.19	854	1.34	897	1.48	938	1.62	977	1.77
2850	822	1.30	867	1.45	910	1.60	950	1.75	989	1.90
3000	836	1.42	881	1.57	923	1.73	963	1.89	1001	2.05
3150	851	1.54	895	1.70	936	1.87	976	2.03	1014	2.20
3300	866	1.67	909	1.84	950	2.01	989	2.19	1027	2.36
3450	881	1.81	924	1.99	964	2.17	1003	2.35	1040	2.53
3600	897	1.96	939	2.14	979	2.33	1017	2.52	1054	2.70

Standard static – 858–1215, 1.4 HP
Mid–static – 606–837, 2.4 HP
High static – 1211–1568, 2.4 max HP
– Not Applicable

FAN PERFORMANCE (cont.)

Table 42 – 50TC-*14 **HORIZONTAL SUPPLY** **ENGLISH**

CFM	AVAILABLE EXTERNAL STATIC PRESSURE (IN. WG)									
	0.2		0.4		0.6		0.8		1.0	
	RPM	BHP	RPM	BHP	RPM	BHP	RPM	BHP	RPM	BHP
3750	**621**	**1.03**	**679**	**1.21**	734	1.40	786	1.59	837	1.79
4063	**663**	**1.28**	717	1.47	769	1.67	818	1.88	866	2.09
4375	706	1.56	757	1.77	805	1.98	852	2.20	897	2.43
4688	749	1.89	797	2.11	843	2.34	887	2.57	930	2.81
5000	793	2.26	838	2.50	881	2.74	923	2.98	965	3.23
5313	837	2.69	880	2.93	921	3.19	961	3.44	1000	3.71
5625	882	3.16	922	3.42	961	3.68	999	3.95	1037	4.23
5938	926	3.68	964	3.96	1001	4.23	1038	4.52	–	–
6250	971	4.26	1007	4.55	–	–	–	–	–	–

CFM	AVAILABLE EXTERNAL STATIC PRESSURE (IN. WG)									
	1.2		1.4		1.6		1.8		2.0	
	RPM	BHP	RPM	BHP	RPM	BHP	RPM	BHP	RPM	BHP
3750	885	1.99	932	2.20	978	2.42	1022	2.64	1065	2.86
4063	912	2.31	957	2.53	1001	2.75	1043	2.98	1084	3.22
4375	941	2.66	984	2.89	1026	3.13	1066	3.37	1106	3.62
4688	972	3.05	1013	3.29	1053	3.54	1092	3.80	1130	4.06
5000	1005	3.49	1044	3.74	1082	4.01	1119	4.27	1156	4.55
5313	1038	3.97	1076	4.24	1113	4.519	–	–	–	–
5625	1073	4.51	–	–	–	–	–	–	–	–
5938	–	–	–	–	–	–	–	–	–	–
6250	–	–	–	–	–	–	–	–	–	–

Standard static – 858–1215, 1.4 HP
Mid–static – 606–837, 2.4 HP
High static – 1211–1568, 2.4 max HP
– Not Applicable

Table 43 – 50TC-*14 **VERTICAL SUPPLY** **ENGLISH**

CFM	AVAILABLE EXTERNAL STATIC PRESSURE (IN. WG)									
	0.2		0.4		0.6		0.8		1.0	
	RPM	BHP	RPM	BHP	RPM	BHP	RPM	BHP	RPM	BHP
3750	661	1.16	719	1.35	773	1.54	822	1.73	869	1.93
4063	706	1.43	761	1.64	812	1.85	860	2.06	904	2.27
4375	752	1.75	804	1.98	852	2.20	898	2.43	941	2.65
4688	798	2.12	847	2.36	894	2.60	937	2.85	979	3.09
5000	844	2.54	891	2.80	936	3.06	978	3.31	1018	3.57
5313	891	3.01	936	3.28	978	3.56	1019	3.83	1057	4.11
5625	938	3.53	981	3.83	1022	4.12	1060	4.41	1097	4.70
5938	986	4.12	1026	4.43	–	–	–	–	–	–
6250	–	–	–	–	–	–	–	–	–	–

CFM	AVAILABLE EXTERNAL STATIC PRESSURE (IN. WG)									
	1.2		1.4		1.6		1.8		2.0	
	RPM	BHP	RPM	BHP	RPM	BHP	RPM	BHP	RPM	BHP
3750	912	2.12	954	2.31	994	2.50	1031	2.70	1068	2.89
4063	947	2.48	987	2.68	1025	2.89	1062	3.10	1098	3.31
4375	982	2.88	1021	3.10	1058	3.32	1094	3.55	1129	3.77
4688	1018	3.33	1056	3.57	1093	3.81	1128	4.04	1162	4.29
5000	1056	3.82	1093	4.08	1128	4.34	1162	4.59	–	–
5313	1094	4.38	1130	4.65	–	–	–	–	–	–
5625	–	–	–	–	–	–	–	–	–	–
5938	–	–	–	–	–	–	–	–	–	–
6250	–	–	–	–	–	–	–	–	–	–

Standard static – 858–1215, 1.4 HP
Mid–static – 606–837, 2.4 HP
High static – 1211–1568, 2.4 max HP
– Not Applicable

FAN PERFORMANCE (cont.)

Table 44 – 50TC-*16 **HORIZONTAL SUPPLY** **ENGLISH**

CFM	AVAILABLE EXTERNAL STATIC PRESSURE (in. w.g.)									
	0.2		0.4		0.6		0.8		1.0	
	RPM	BHP	RPM	BHP	RPM	BHP	RPM	BHP	RPM	BHP
3750	**377**	**0.50**	**449**	**0.69**	516	0.90	579	1.13	640	1.39
4063	**396**	**0.61**	464	0.81	527	1.02	587	1.26	645	1.52
4375	**415**	**0.72**	480	0.94	540	1.16	597	1.40	652	1.67
4688	**435**	**0.85**	497	1.08	554	1.32	608	1.57	660	1.84
5000	455	1.00	514	1.24	569	1.49	620	1.75	670	2.02
5313	475	1.17	532	1.42	584	1.68	634	1.95	681	2.23
5625	496	1.35	550	1.62	600	1.89	648	2.17	694	2.46
5938	516	1.55	568	1.83	617	2.12	663	2.41	707	2.71
6250	537	1.77	587	2.07	634	2.37	678	2.67	721	2.98

CFM	AVAILABLE EXTERNAL STATIC PRESSURE (in. w.g.)									
	1.2		1.4		1.6		1.8		2.0	
	RPM	BHP	RPM	BHP	RPM	BHP	RPM	BHP	RPM	BHP
3750	697	1.67	751	1.97	802	2.29	850	2.62	*895*	*2.97*
4063	700	1.80	753	2.11	803	2.43	851	2.77	*896*	*3.13*
4375	705	1.96	756	2.26	805	2.59	852	2.94	*897*	*3.30*
4688	711	2.13	761	2.44	808	2.77	854	3.12	*899*	*3.49*
5000	719	2.32	766	2.63	812	2.97	*857*	*3.32*	*901*	*3.69*
5313	728	2.53	773	2.85	818	3.19	*861*	*3.55*	*904*	*3.92*
5625	738	2.77	782	3.09	825	3.43	*867*	*3.79*	*908*	*4.17*
5938	750	3.03	792	3.35	833	3.70	*873*	*4.06*	*913*	*4.44*
6250	762	3.31	803	3.64	842	3.99	*881*	*4.36*	*920*	*4.74*

Table 45 – 50TC-*16 **VERTICAL SUPPLY** **ENGLISH**

CFM	AVAILABLE EXTERNAL STATIC PRESSURE (in. w.g.)									
	0.2		0.4		0.6		0.8		1.0	
	RPM	BHP	RPM	BHP	RPM	BHP	RPM	BHP	RPM	BHP
3750	**379**	**0.51**	**452**	**0.73**	521	0.99	588	1.30	652	1.65
4063	**398**	**0.61**	467	0.84	532	1.11	595	1.42	656	1.76
4375	**417**	**0.72**	483	0.97	544	1.24	603	1.55	661	1.90
4688	**436**	**0.84**	500	1.11	558	1.39	614	1.70	668	2.05
5000	456	0.98	517	1.26	572	1.56	625	1.88	677	2.23
5313	476	1.13	534	1.43	588	1.74	638	2.07	688	2.42
5625	496	1.30	552	1.62	603	1.94	652	2.28	699	2.64
5938	516	1.48	570	1.82	620	2.16	667	2.51	712	2.87
6250	536	1.69	589	2.04	637	2.39	682	2.76	725	3.13

CFM	AVAILABLE EXTERNAL STATIC PRESSURE (in. w.g.)									
	1.2		1.4		1.6		1.8		2.0	
	RPM	BHP	RPM	BHP	RPM	BHP	RPM	BHP	RPM	BHP
3750	712	2.03	768	2.43	821	2.86	*870*	*3.31*	*917*	*3.78*
4063	714	2.15	769	2.56	822	3.00	*871*	*3.46*	*918*	*3.94*
4375	717	2.28	771	2.70	822	3.14	*871*	*3.61*	*918*	*4.10*
4688	722	2.43	774	2.85	824	3.30	*872*	*3.77*	*918*	*4.27*
5000	728	2.61	778	3.03	827	3.47	*874*	*3.95*	*919*	*4.45*
5313	736	2.81	784	3.22	831	3.67	*876*	*4.14*	*921*	*4.64*
5625	746	3.03	791	3.44	836	3.89	*880*	*4.36*	*923*	*4.86*
5938	756	3.27	800	3.69	843	4.13	*885*	*4.61*	–	–
6250	768	3.53	810	3.95	851	4.40	*892*	*4.88*	–	–

Standard static – 858–1215, 1.4 HP
Mid–static – 606–837, 2.4 HP
High static – 1211–1568, 2.4 max HP
– Not Applicable
Italics Requires high static drive package with KR11HY232 (1VP65) motor pulley.

FAN PERFORMANCE (cont.)

Table 46 – PULLEY ADJUSTMENT

UNIT		MOTOR/DRIVE COMBO	MOTOR PULLEY TURNS OPEN										
			0	0.5	1.0	1.5	2.0	2.5	3.0	3.5	4.0	4.5	5.0
07	3 phase	Standard Static	1211	1175	1140	1104	1069	1033	997	962	926	891	855
		Medium Static	N/A	N/A	N/A	N/A	N/A	N/A	N/A	N/A	N/A	N/A	N/A
		High Static	1568	1532	1497	1461	1425	1390	1354	1318	1282	1247	1211
08	3 phase	Standard Static	689	665	641	618	594	570	546	522	499	475	451
		Medium Static	903	879	855	832	808	784	760	736	713	689	665
		High Static	1140	1114	1088	1062	1036	1011	985	959	933	907	881
09	3 phase	Standard Static	689	665	641	618	594	570	546	522	499	475	451
		Medium Static	903	879	855	832	808	784	760	736	713	689	665
		High Static	1140	1114	1088	1062	1036	1011	985	959	933	907	881
12	3 phase	Standard Static	689	665	641	618	594	570	546	522	499	475	451
		Medium Static	903	879	855	832	808	784	760	736	713	689	665
		High Static	1140	1114	1088	1062	1036	1011	985	959	933	907	881
14	3 phase	Standard Static	838	813	789	764	739	715	690	665	640	616	591
		Medium Static	1084	1059	1035	1010	986	961	936	912	887	863	838
		High Static	1240	1218	1196	1175	1153	1131	1109	1087	1066	1044	1022
16	3 phase	Standard Static	564	550	536	522	508	494	479	465	451	437	423
		Medium Static	709	690	672	653	635	616	597	579	560	542	523
		High Static	795	780	765	750	735	721	706	691	676	661	646

NOTE: Do not adjust pulley further than 5 turns open.

– Factory settings

ECONOMIZER, BAROMETRIC RELIEF AND PE PERFORMANCE

Vertical Application

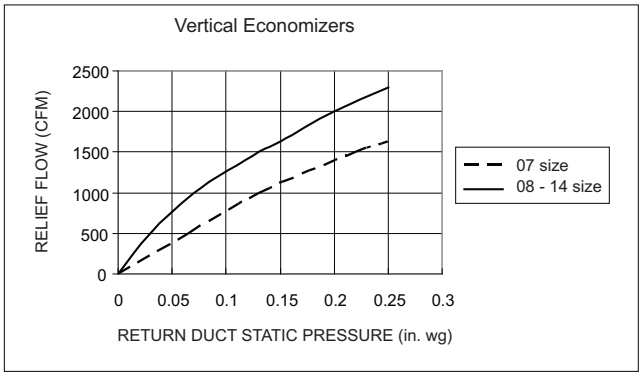

C12117

Fig. 17 - Barometric Relief Flow Capacity

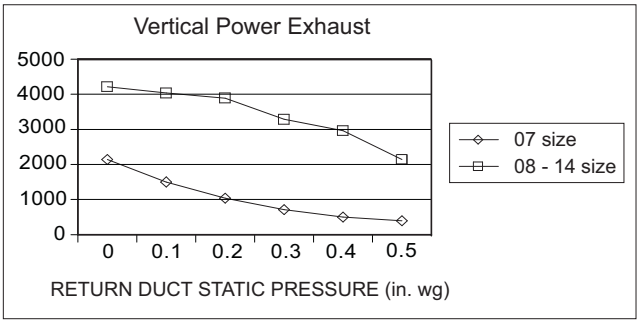

C12120

Fig. 20 - Power Exhaust Performance

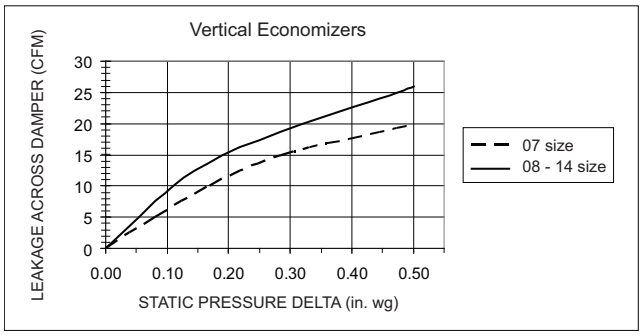

C12118

Fig. 18 - Outdoor Air Damper Leakage

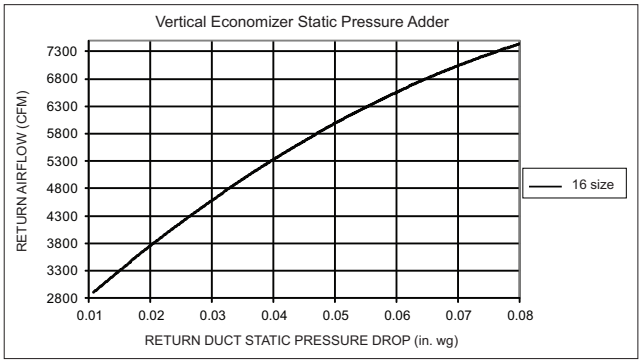

C12123

Fig. 21 - Return Air Pressure Drop

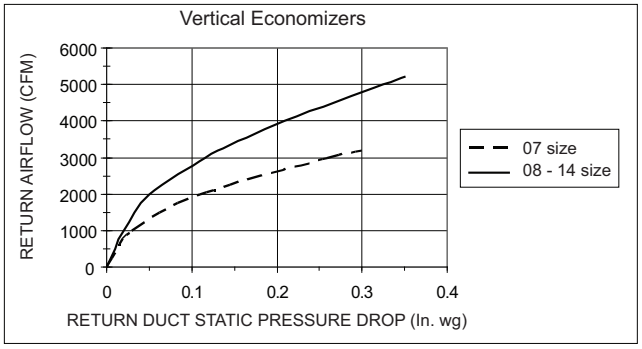

C12119

Fig. 19 - Return Air Pressure Drop

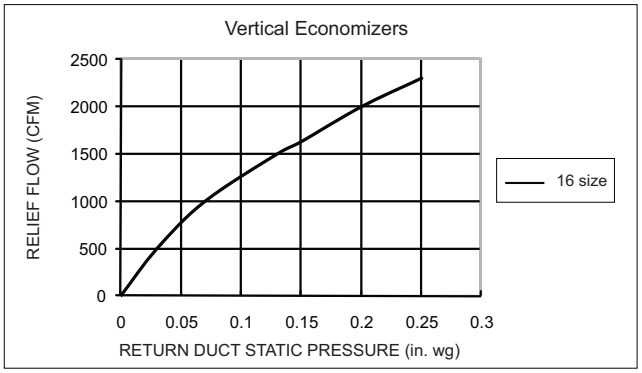

C12124

Fig. 22 - Barometric Relief Flow

Horizontal Application

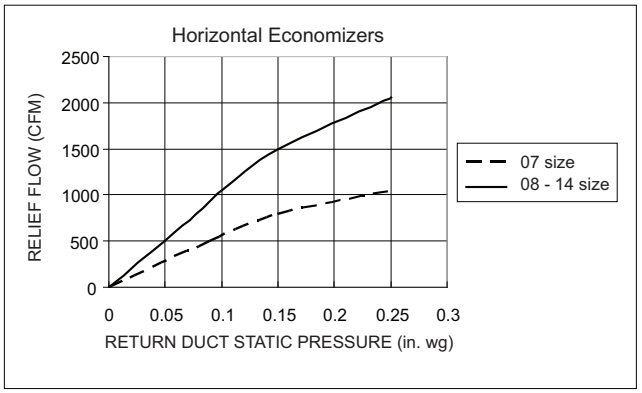

C12113

Fig. 23 - Barometric Relief Flow Capacity

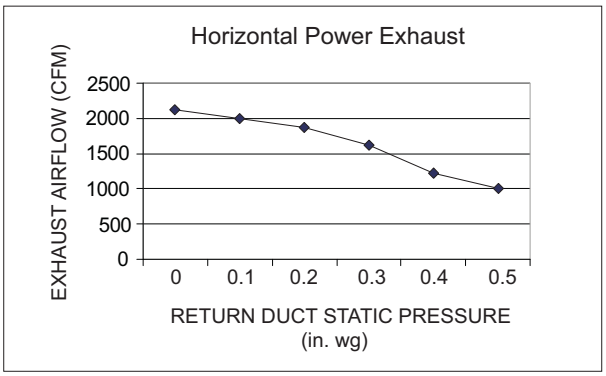

C12116

Fig. 26 - Power Exhaust Performance

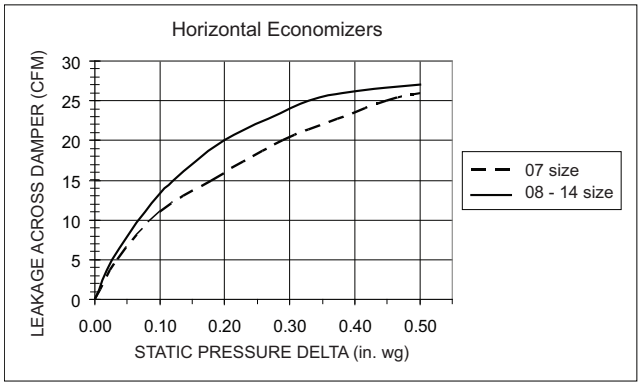

C12114

Fig. 24 - Outdoor Air Damper Leakage

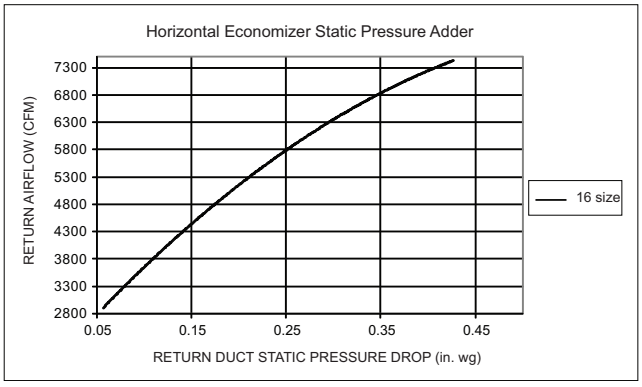

C12125

Fig. 27 - Return Air Pressure Drop

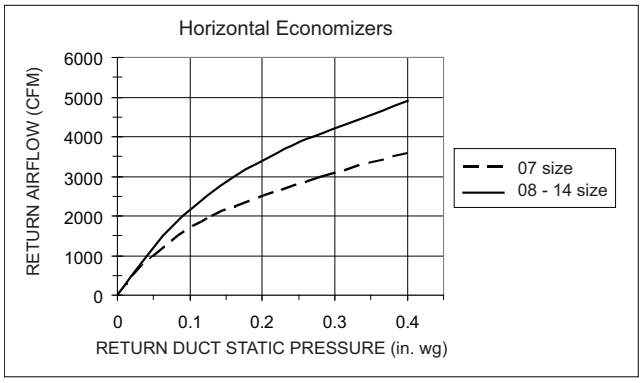

C12115

Fig. 25 - Return Air Pressure Drop

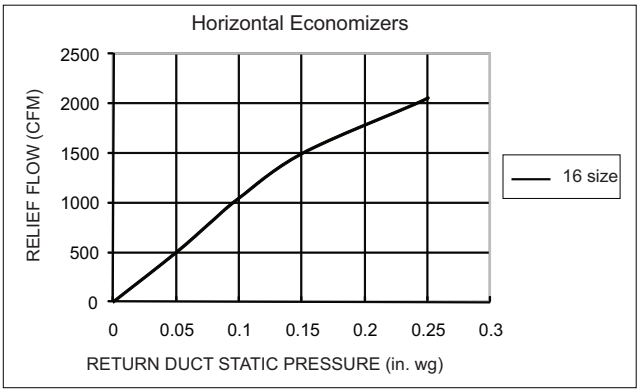

C12126

Fig. 28 - Barometric Relief Flow

ELECTRICAL INFORMATION

Table 47 – 50TC-A07 **1-STAGE COOLING**

V–Ph–Hz	VOLTAGE RANGE		COMP (ea)		OFM (ea)		IFM				
	MIN	MAX	RLA	LRA	WATTS	FLA	TYPE	Max WATTS	Max AMP Draw	EFF at Full Load	FLA
400–3–50	360	440	9.7	64	325	0.7	STD	2120	2.7	80%	2.6
							N/A	N/A	N/A	N/A	N/A
							HIGH	3775	3.6	81%	3.4

Table 48 – 50TC-D08 **2-STAGE COOLING**

V–Ph–Hz	VOLTAGE RANGE		COMP (Cir 1)		COMP (Cir 2)		OFM (ea)		IFM				
	MIN	MAX	RLA	LRA	RLA	LRA	WATTS	FLA	TYPE	Max WATTS	Max AMP Draw	EFF at Full Load	FLA
400–3–50	360	440	6.0	43	6.0	43	325	0.7	STD	1448	2.7	80%	2.6
									MED	2278	3.6	81%	3.4
									HIGH	4400	7.4	81%	7.4

Table 49 – 50TC-D09 **2-STAGE COOLING**

V–Ph–Hz	VOLTAGE RANGE		COMP (Cir 1)		COMP (Cir 2)		OFM (ea)		IFM				
	MIN	MAX	RLA	LRA	RLA	LRA	WATTS	FLA	TYPE	Max WATTS	Max AMP Draw	EFF at Full Load	FLA
400–3–50	360	440	6.2	52	6.1	43	325	0.7	STD	1448	2.73	80%	2.6
									MED	2120	2.73	80%	2.6
									HIGH	2694	4.62	80%	4.4

Table 50 – 50TC-D12 **2-STAGE COOLING**

V–Ph–Hz	VOLTAGE RANGE		COMP (Cir 1)		COMP (Cir 2)		OFM (ea)		IFM				
	MIN	MAX	RLA	LRA	RLA	LRA	WATTS	FLA	TYPE	Max WATTS	Max AMP Draw	EFF at Full Load	FLA
400–3–50	360	440	7.8	52	7.8	52	325	0.7	STD	2120	2.7	80%	2.6
									MED	3775	4.6	81%	4.4
									HIGH	4400	7.4	81%	7.4

Table 51 – 50TC-D14 **2-STAGE COOLING**

V–Ph–Hz	VOLTAGE RANGE		COMP (Cir 1)		COMP (Cir 2)		OFM (ea)		IFM				
	MIN	MAX	RLA	LRA	RLA	LRA	WATTS	FLA	TYPE	Max WATTS	Max AMP Draw	EFF at Full Load	FLA
400–3–50	360	440	9.7	64	10.6	74	800	3.4	STD	2278	3.6	81%	3.4
									MED	2694	4.6	81%	4.4
									HIGH	4400	7.4	81%	7.4

Table 52 – 50TC-D16 **2-STAGE COOLING**

V–Ph–Hz	VOLTAGE RANGE		COMP (Cir 1)		COMP (Cir 2)		OFM (ea)		IFM				
	MIN	MAX	RLA	LRA	RLA	LRA	WATTS	FLA	TYPE	Max WATTS	Max AMP Draw	EFF at Full Load	FLA
400–3–50	360	440	12.2	101	12.2	100	800	0.7	STD	2278	3.6	81%	3.4
									MED	2694	4.6	81%	4.4
									HIGH	4400	10.2	81%	10.2

Table 53 – MCA/MOCP DETERMINATION NO C.O. OR UNPWRD C.O.

UNIT	NOM. V–PH–HZ	IFM TYPE	ELECTRIC HEATER		NO C.O. OR UNPWR C.O.			
					NO P.E.			
			NOM (KW)	FLA	MCA	MOCP	DISC. SIZE	
							FLA	LRA
50TC*A07 (1–stage cool)	400–3–50	STD	–	–	15.4	25	15	75
			4.2	6.0	15.4	25	15	75
			8.0	11.5	17.6	25	16	75
			9.7	14.0	20.8	25	19	75
			16.0	23.1	32.1	35	30	75
			17.7	25.6	35.3	40	32	75
		HIGH	–	–	16.2	25	16	94
			4.2	6.0	16.2	25	16	94
			8.0	11.5	18.6	25	17	94
			9.7	14.0	21.8	25	20	94
			16.0	23.1	33.1	35	30	94
			17.7	25.6	36.3	40	33	94
50TC*D08 (2–stage cool)	400–3–50	STD	–	–	17.5	20	18	99
			9.7	13.9	20.6	25	19	99
			11.5	16.5	23.9	25	22	99
			19.3	27.9	38.1	40	35	99
			22.9	33.1	44.6	45	41	99
			29.0	41.8	55.5	60	51	99
		MED	–	–	18.3	20	19	118
			9.7	13.9	21.6	25	20	118
			11.5	16.5	24.9	25	23	118
			19.3	27.9	39.1	40	36	118
			22.9	33.1	45.6	50	42	118
			29.0	41.8	56.5	60	52	118
		HIGH	–	–	22.7	30	24	171
			9.7	13.9	26.6	30	24	171
			11.5	16.5	29.9	30	27	171
			19.3	27.9	44.1	45	41	171
			22.9	33.1	50.6	60	47	171
			29.0	41.8	61.5	70	57	171
50TC*D09 (2–stage cool)	400–3–50	STD	–	–	17.9	20	19	108
			9.7	13.9	20.6	25	19	108
			11.5	16.5	23.9	25	22	108
			19.3	27.9	38.1	40	35	108
			22.9	33.1	44.6	45	41	108
			29.0	41.8	55.5	60	51	108
		MED	–	–	17.9	20	19	114
			9.7	13.9	20.6	25	19	114
			11.5	16.5	23.9	25	22	114
			19.3	27.9	38.1	40	35	114
			22.9	33.1	44.6	45	41	114
			29.0	41.8	55.5	60	51	114
		HIGH	–	–	19.7	25	21	172
			9.7	13.9	22.9	25	21	172
			11.5	16.5	26.1	30	24	172
			19.3	27.9	40.4	45	37	172
			22.9	33.1	46.9	50	43	172
			29.0	41.8	57.8	60	53	172

Table 39 – MCA/MOCP DETERMINATION NO C.O. OR UNPWRD C.O. (cont.)

UNIT	NOM. V–PH–HZ	IFM TYPE	ELECTRIC HEATER		NO C.O. OR UNPWR C.O.			
					NO P.E.			
			NOM (KW)	FLA	MCA	MOCP	DISC. SIZE	
							FLA	LRA
50TC*(A,D)12 (2–stage cool)	400–3–50	STD	–	–	21.6	25	23	123
			9.7	13.9	21.6	25	23	123
			11.5	16.5	23.9	25	23	123
			22.9	33.1	44.6	45	41	123
			29.0	41.8	55.5	60	51	123
			34.7	50.1	65.9	70	61	123
		MED	–	–	23.4	30	25	181
			9.7	13.9	23.4	30	25	181
			11.5	16.5	26.1	30	25	181
			22.9	33.1	46.9	50	43	181
			29.0	41.8	57.8	60	53	181
			34.7	50.1	68.1	70	63	181
		HIGH	–	–	26.4	30	28	189
			9.7	13.9	26.6	30	28	189
			11.5	16.5	29.9	30	28	189
			22.9	33.1	50.6	60	47	189
			29.0	41.8	61.5	70	57	189
			34.7	50.1	71.9	80	66	189
50TC*(A,D)14 (2–stage cool)	400–3–50	STD	–	–	29.8	40	31	198
			9.7	13.9	29.8	40	31	198
			11.5	16.5	29.8	40	31	198
			22.9	33.1	45.6	50	42	198
			29.0	41.8	56.5	60	52	198
			34.7	50.1	66.9	70	62	198
		MED	–	–	30.8	40	32	243
			9.7	13.9	30.8	40	32	243
			11.5	16.5	30.8	40	32	243
			22.9	33.1	46.9	50	43	243
			29.0	41.8	57.8	60	53	243
			34.7	50.1	68.1	70	63	243
		HIGH	–	–	33.8	40	36	251
			9.7	13.9	33.8	40	36	251
			11.5	16.5	33.8	40	36	251
			22.9	33.1	50.6	60	47	251
			29.0	41.8	61.5	70	57	251
			34.7	50.1	71.9	80	66	251
50TC*AD16 (2–stage cool)	400–3–50	STD	–	–	33.0	45	34	235
			11.5	16.6	33.0	45	34	235
			23.3	33.6	46.3	50	43	235
			30.2	43.6	58.8	60	54	235
			34.7	50.2	67.0	70	62	235
			46.5	67.2	88.3	90	81	235
		MED	–	–	34.0	45	36	280
			11.5	16.6	34.0	45	36	280
			23.3	33.6	47.5	50	44	280
			30.2	43.6	60.0	60	55	280
			34.7	50.2	68.3	70	63	280
			46.5	67.2	89.5	90	82	280
		HIGH	–	–	39.8	50	42	253
			11.5	16.6	39.8	50	42	253
			23.3	33.6	54.8	60	50	253
			30.2	43.6	67.3	70	62	253
			34.7	50.2	75.5	80	69	253
			46.5	67.2	96.8	100	89	253

WIRING DIAGRAMS

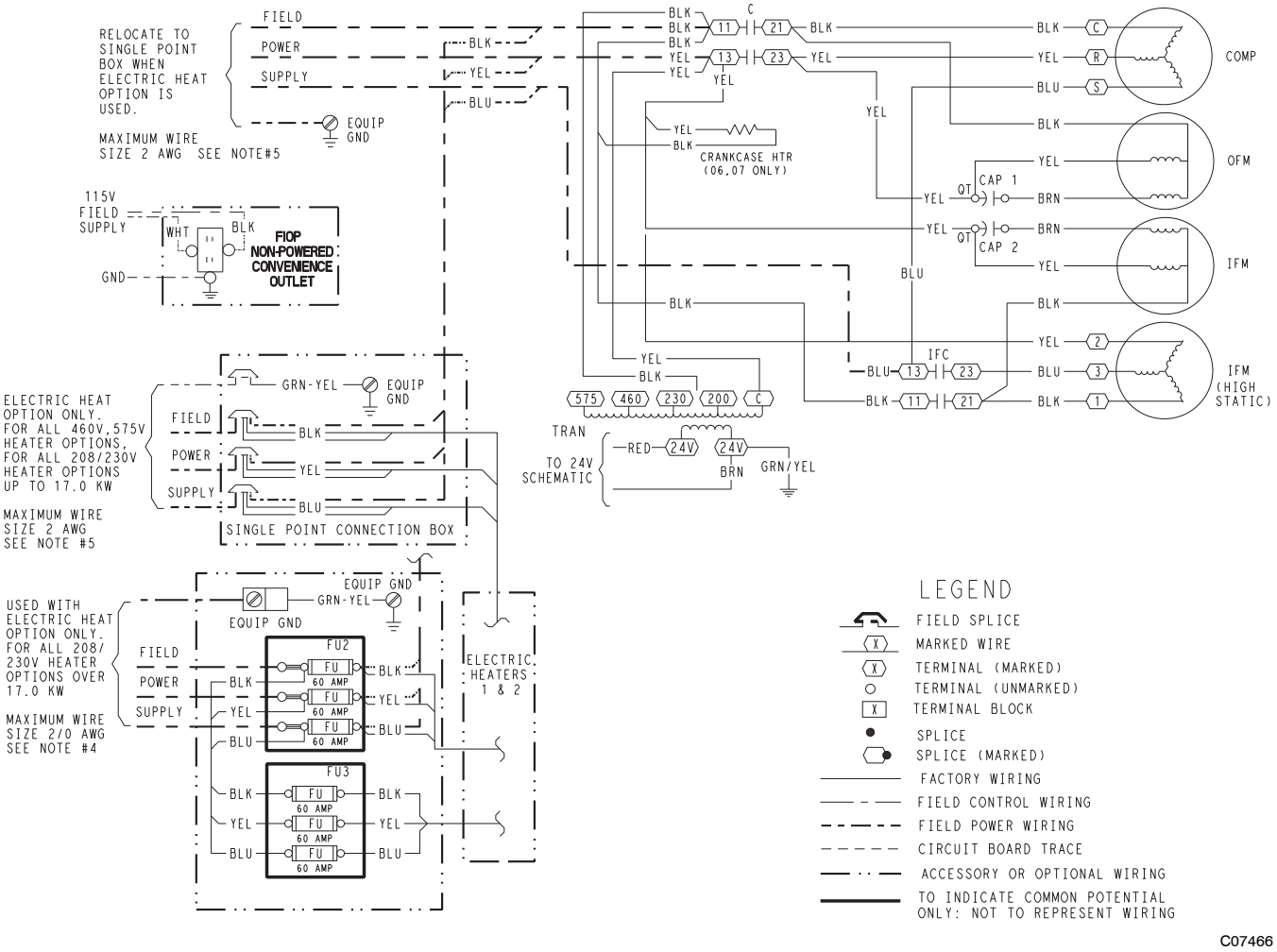

Fig. 29 – 1-Stage Cooling Typical Power Diagram

LEGEND

C	–	Contactor, compressor
CAP	–	Capacitor
CB	–	Circuit breaker
COMP	–	Compressor motor
DDC	–	Direct digital control
FU	–	Fuse
GND	–	Ground
HPS	–	High pressure switch
IAQ	–	Indoor air quality sensors
IFC	–	Indoor fan contactor
IFM	–	Indoor fan motor
LA	–	Low ambient lockout
LPS	–	Low pressure switch
OAT	–	Outdoor air temp sensor
OFM	–	Outdoor fan motor
OLR	–	Overload relay
PL	–	Plug assembly
POT	–	Potentiometer
PMR	–	Phase monitor relay
QT	–	Quadruple terminal
R	–	Relay
RAT	–	Return air temp sensor
SAT	–	Supply air temp sensor
TDR	–	Time delay relay
TRAN	–	Transformer

NOTES:

1. If any of the original wire furnished must be replaced, it must be replaced with type 90 C wire or its equivalent.
2. Compressor and fan motors are thermally protected. Three phase motors are protected against primary single phasing conditions.
3. Use copper, copper clad, aluminum or aluminum connectors.
4. Use copper conductor only.

WIRING DIAGRAMS (cont.)

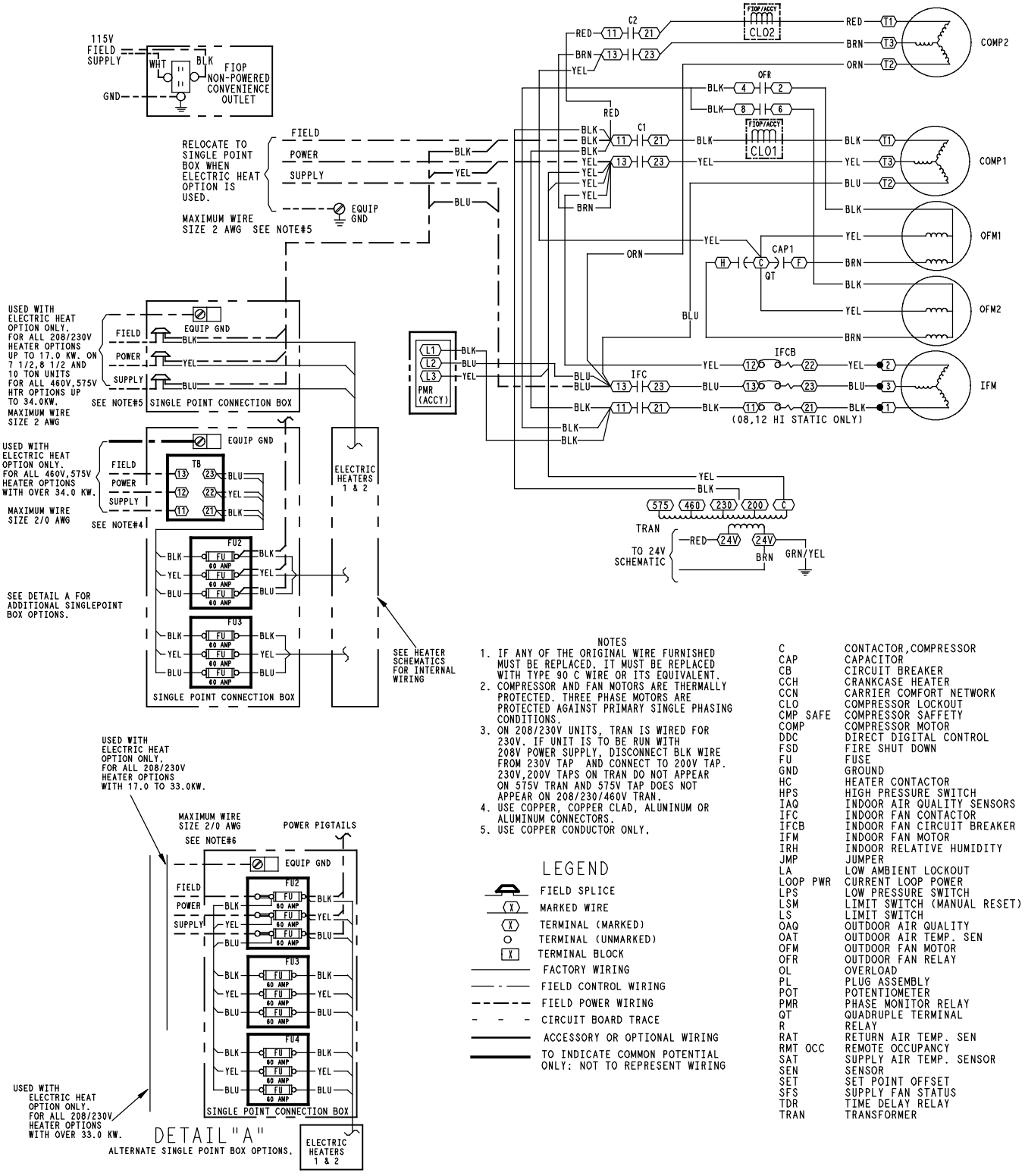

NOTES

1. IF ANY OF THE ORIGINAL WIRE FURNISHED MUST BE REPLACED, IT MUST BE REPLACED WITH TYPE 90 C WIRE OR ITS EQUIVALENT.
2. COMPRESSOR AND FAN MOTORS ARE THERMALLY PROTECTED. THREE PHASE MOTORS ARE PROTECTED AGAINST PRIMARY SINGLE PHASING CONDITIONS.
3. ON 208/230V UNITS, TRAN IS WIRED FOR 230V. IF UNIT IS TO BE RUN WITH 208V POWER SUPPLY, DISCONNECT BLK WIRE FROM 230V TAP AND CONNECT TO 200V TAP. 230V,200V TAPS ON TRAN DO NOT APPEAR ON 575V TRAN AND 575V TAP DOES NOT APPEAR ON 208/230/460V TRAN.
4. USE COPPER, COPPER CLAD, ALUMINUM OR ALUMINUM CONNECTORS.
5. USE COPPER CONDUCTOR ONLY.

LEGEND

	FIELD SPLICE
(X)	MARKED WIRE
(X)	TERMINAL (MARKED)
	TERMINAL (UNMARKED)
[X]	TERMINAL BLOCK
———	FACTORY WIRING
—·—·—	FIELD CONTROL WIRING
- - - -	FIELD POWER WIRING
- - -	CIRCUIT BOARD TRACE
———	ACCESSORY OR OPTIONAL WIRING
———	TO INDICATE COMMON POTENTIAL ONLY: NOT TO REPRESENT WIRING

C	CONTACTOR,COMPRESSOR
CAP	CAPACITOR
CB	CIRCUIT BREAKER
CCH	CRANKCASE HEATER
CCN	CARRIER COMFORT NETWORK
CLO	COMPRESSOR LOCKOUT
CMP SAFE	COMPRESSOR SAFFETY
COMP	COMPRESSOR MOTOR
DDC	DIRECT DIGITAL CONTROL
FSD	FIRE SHUT DOWN
FU	FUSE
GND	GROUND
HC	HEATER CONTACTOR
HPS	HIGH PRESSURE SWITCH
IAQ	INDOOR AIR QUALITY SENSORS
IFC	INDOOR FAN CONTACTOR
IFCB	INDOOR FAN CIRCUIT BREAKER
IFM	INDOOR FAN MOTOR
IRH	INDOOR RELATIVE HUMIDITY
JMP	JUMPER
LA	LOW AMBIENT LOCKOUT
LOOP PWR	CURRENT LOOP POWER
LPS	LOW PRESSURE SWITCH
LSM	LIMIT SWITCH (MANUAL RESET)
LS	LIMIT SWITCH
OAQ	OUTDOOR AIR QUALITY
OAT	OUTDOOR AIR TEMP. SEN
OFM	OUTDOOR FAN MOTOR
OFR	OUTDOOR FAN RELAY
OL	OVERLOAD
PL	PLUG ASSEMBLY
POT	POTENTIOMETER
PMR	PHASE MONITOR RELAY
QT	QUADRUPLE TERMINAL
R	RELAY
RAT	RETURN AIR TEMP. SEN
RMT OCC	REMOTE OCCUPANCY
SAT	SUPPLY AIR TEMP. SENSOR
SEN	SENSOR
SET	SET POINT OFFSET
SFS	SUPPLY FAN STATUS
TDR	TIME DELAY RELAY
TRAN	TRANSFORMER

C08536

Fig. 30 - 2-Stage Cooling Typical Power Diagram

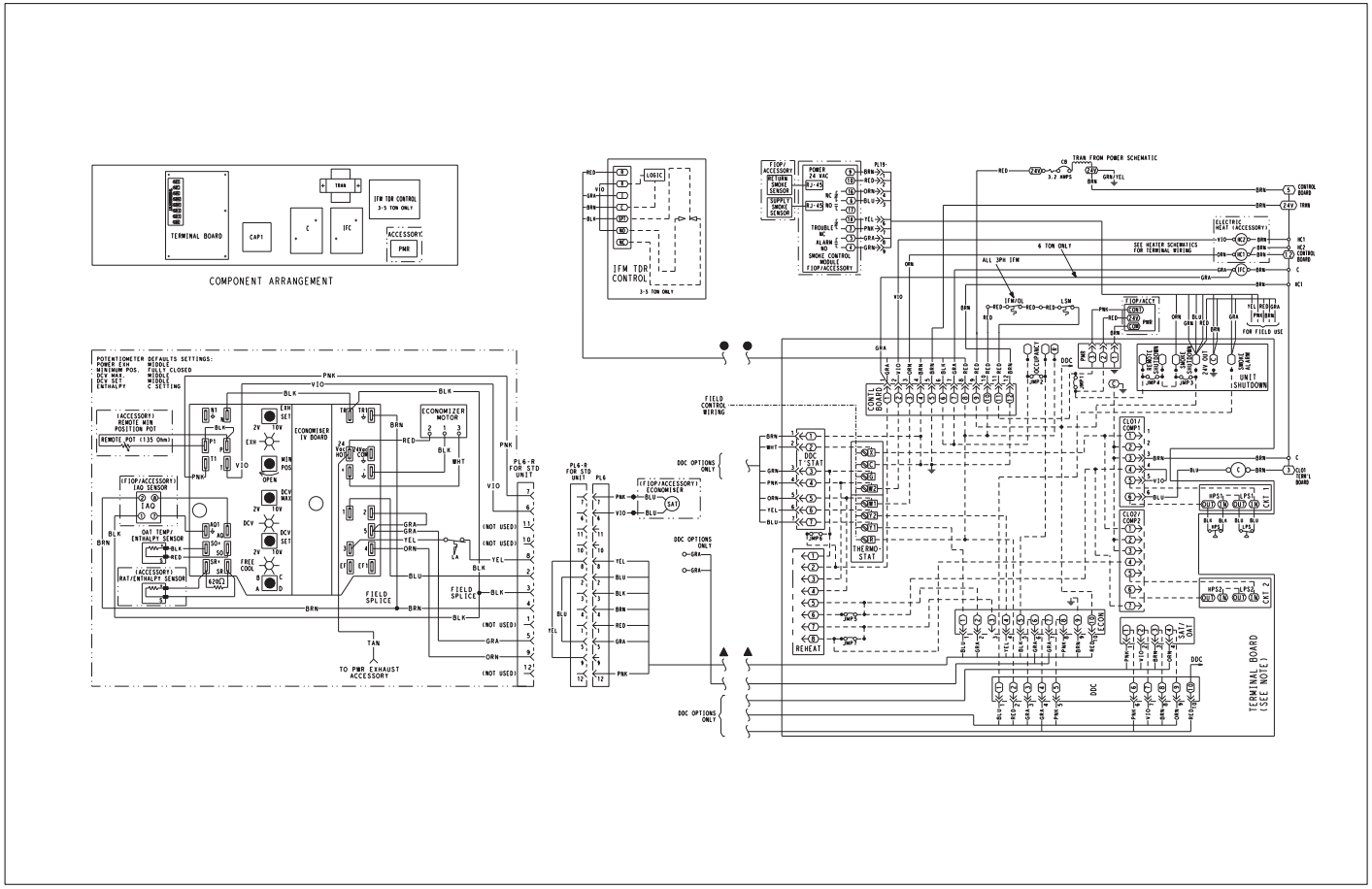

C08002

Fig. 31 - 1-Stage Typical Wiring Diagram

NOTES:

Terminal board schematic layout does not match actual terminal board to simplify circuit traces. Ensure designated jumpers on terminal board are cut when adding smoke detectors, phase loss relay and remote shutdown.

ECONOMIZER NOTES:

1. 620 ohm, 1 watt, 5% resister should be removed only when using differential enthalpy or dry bulb.
2. If a separate field–supplied 24V transformer is used for the IAQ sensor power supply, it cannot have the secondary of the transformer grounded.
3. For field–installed remote minimum position POT, remove black wire jumper between P and P1 and set control minimum position POT to the minimum position.

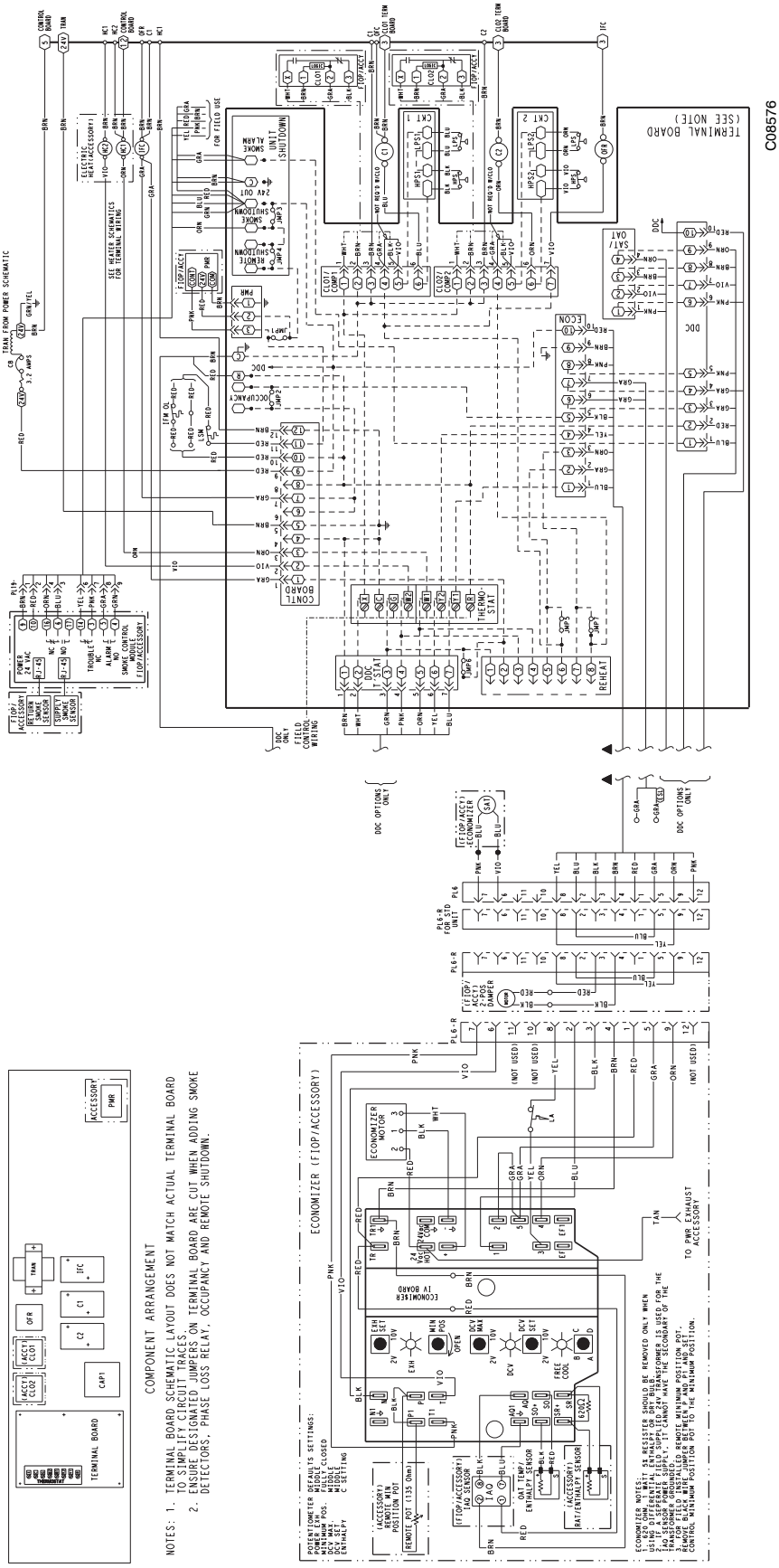

Fig. 32 - 2-Stage Typical Wiring Diagram

SEQUENCE OF OPERATION

General

The sequence below describes the sequence of operation for an electro-mechanical unit with and without a factory installed EconoMi$er™ IV (called "economizer" in this sequence). For information regarding a direct digital controller, see the start-up, operations, and troubleshooting manual for the applicable controller.

Electro-mechanical units with no economizer

Cooling —

When the thermostat calls for cooling, terminals G and Y1 are energized. As a result, the indoor-fan contactor (IFC) and the compressor contactor (C1) are energized, causing the indoor-an motor (IFM), compressor #1, and outdoor fan to start. If the unit has 2 stages of cooling, the thermostat will additionally energize Y2. The Y2 signal will energize compressor contactor #2 (C2), causing compressor #2 to start. Regardless of the number of stages, the outdoor-fan motor runs continuously while unit is cooling.

Heating

NOTE: The 50TC is sold as cooling only. If electric heaters are required, use only factory-approved electric heaters. They will operate as described below.

Units have either 1 or 2 stages of electric heat. When the thermostat calls for heating, power is applied to the W1 terminal at the unit. The unit control will energize the indoor fan contactor and the first stage of electric heat. On units with two-stage heating, when additional heating is required, the second stage of electric heat (if equipped) will be energized when power is applied at the W2 terminal on the unit.

Electro-mechanical units with an economizer

Cooling —

When free cooling is not available, the compressors will be controlled by the zone thermostat. When free cooling is available, the outdoor-air damper is modulated by the EconoMi$er IV control to provide a 10°C (50°F) to 13°C (55°F) mixed-air temperature into the zone. As the mixed air temperature fluctuates above 13°C (55°F) or below 10°C (50°F) dampers will be modulated (open or close) to bring the mixed-air temperature back within control. If mechanical cooling is utilized with free cooling, the outdoor-air damper will maintain its current position at the time the compressor is started. If the increase in cooling capacity causes the mixed-air temperature to drop below 9°C (45°F), then the outdoor-air damper position will be decreased to the minimum position. If the mixed-air temperature continues to fall, the outdoor-air damper will close. Control returns to normal once the mixed-air temperature rises above 9°C (48°F). The power exhaust fans will be energized and de-energized, if installed, as the outdoor-air damper opens and closes.

If field-installed accessory CO_2 sensors are connected to the EconoMi$er IV control, a demand controlled ventilation strategy will begin to operate. As the CO_2 level in the zone increases above the CO_2 setpoint, the minimum position of the damper will be increased proportionally. As the CO_2 level decreases because of the increase in fresh air, the outdoor-air damper will be proportionally closed. For EconoMi$er IV operation, there must be a thermostat call for the fan (G). If the unit is occupied and the fan is on, the damper will operate at minimum position. Otherwise, the damper will be closed.

When the EconoMi$er IV control is in the occupied mode and a call for cooling exists (Y1 on the thermostat), the control will first check for indoor fan operation. If the fan is not on, then cooling will not be activated. If the fan is on, then the control will open the EconoMi$er IV damper to the minimum position.

On the initial power to the EconoMi$er IV control, it will take the damper up to 2 1/2 minutes before it begins to position itself. After the initial power-up, further changes in damper position can take up to 30 seconds to initiate. Damper movement from full closed to full open (or vice versa) will take between 1 1/2 and 2 1/2 minutes. If free cooling can be used as determined from the appropriate changeover command (switch, dry bulb, enthalpy curve, differential dry bulb, or differential enthalpy), then the control will modulate the dampers open to maintain the mixed-air temperature setpoint at 10°C (50°F) to 13°C (55°F). If there is a further demand for cooling (cooling second stage - Y2 is energized), then the control will bring on compressor stage 1 to maintain the mixed-air temperature setpoint. The EconoMi$er IV damper will be open at maximum position. EconoMi$er IV operation is limited to a single compressor.

Heating

The sequence of operation for the heating is the same as an electromechanical unit with no economizer. The only difference is how the economizer acts. The economizer will stay at the Economizer Minimum Position while the evaporator fan is operating. The outdoor-air damper is closed when the indoor fan is not operating.

GUIDE SPECIFICATIONS - 50TC-*07-16

Note about this specification:

Carrier wrote this specification in the 2004 version of the “Masterformat” as published by the Construction Specification Institute. Please feel free to copy this specification directly into your building spec.

Cooling Only/Electric Heat Packaged Rooftop

HVAC Guide Specifications

Size Range: **18.17 kW to 42.5 kW (5 to 12.5 Tons)**

Puron
the environmentally sound refrigerant

50TC

Section **Description**

23 06 80 Schedules for Decentralized HVAC Equipment

23 06 80.13 Decentralized Unitary HVAC Equipment Schedule

23 06 80.13.A. Rooftop unit schedule

1. Schedule is per the project specification requirements.

23 07 16 HVAC Equipment Insulation

23 07 16.13 Decentralized, Rooftop Units:

23 07 16.13.A. Evaporator fan compartment:

1. Interior cabinet surfaces shall be insulated with a minimum 13mm (1/2-in.) thick, minimum .68kg (1 1/2 lb) density, flexible fiberglass insulation bonded with a phenolic binder, neoprene coated on the air side.
2. Insulation and adhesive shall meet NFPA 90A requirements for flame spread and smoke generation.

23 07 16.13.B. Electric heat compartment:

1. Aluminum foil-faced fiberglass insulation shall be used.
2. Insulation and adhesive shall meet NFPA 90A requirements for flame spread and smoke generation.

23 09 13 Instrumentation and Control Devices for HVAC

23 09 13.23 Sensors and Transmitters

23 09 13.23.A. Thermostats

1. Thermostat must
   a. energize both “W” and “G” when calling for heat.
   b. have capability to energize 2 different stages of cooling, and 2 different stages of heating.
   c. include capability for occupancy scheduling.

23 09 23 Direct-digital Control system for HVAC

23 09 23.13 Decentralized, Rooftop Units:

23 09 23.13.A. PremierLink™ controller

1. Shall be ASHRAE 62-2001 compliant.
2. Shall accept 18-32VAC input power.
3. Shall have an operating temperature range from -40°C (-40°F) to 70°C (158°F), 10% - 95% RH (non-condensing).
4. Shall include an integrated economizer controller to support an economizer with 4 to 20 mA actuator input and no microprocessor controller.
5. Controller shall accept the following inputs: space temperature, setpoint adjustment, outdoor air temperature, indoor air quality, outdoor air quality, indoor relative humidity, compressor lock-out, fire shutdown, enthalpy, fan status, remote time clock/door switch.
6. Shall accept a CO_2 sensor in the conditioned space, and be Demand Control Ventilation (DCV) ready.
7. Shall provide the following outputs: Economizer, fan, cooling stage 1, cooling stage 2, heat stage 1, heat stage 2, heat stage 3/ exhaust/ reversing valve/ dehumidify/ occupied.
8. Unit shall provide surge protection for the controller through a circuit breaker.
9. Shall be Internet capable, and communicate at a Baud rate of 38.4K or faster

10. Shall have an LED display independently showing the status of activity on the communication bus, and processor operation.
11. Shall include an EIA-485 protocol communication port, an access port for connection of either a computer or a Carrier technician tool, an EIA-485 port for network communication to intelligent space sensors and displays, and a port to connect an optional LonWorks plug-in communications card.
12. Shall have built-in Carrier Comfort Network (CCN) protocol, and be compatible with other CCN devices, including ComfortLink and ComfortVIEW controllers.
13. Shall have built-in support for Carrier technician tool.
14. Software upgrades will be accomplished by local download. Software upgrades through chip replacements are not allowed.
15. Shall be shock resistant in all planes to 5G peak, 11ms during operation, and 100G peak, 11ms during storage.
16. Shall be vibration resistant in all planes to 1.5G @ 20-300 Hz.
17. Shall support a bus length of 1219m (4000-ft) max, 60 devices per 305m (1000-ft) section, and 1 RS-485 repeater per 305m (1000-ft) sections.

23 09 23.13.B. Open protocol, direct digital controller:

1. Shall be ASHRAE 62-2001 compliant.
2. Shall accept 18-30VAC, 50Hz, and consumer 15VA or less power.
3. Shall have an operating temperature range from -40°C (-40°F) to 54°C (130°F), 10% - 90% RH (non-condensing).
4. Shall include built-in protocol for BACNET (MS/TP and PTP modes), Modbus (RTU and ASCII), Johnson N2 and LonWorks. LonWorks Echelon processor required for all Lon applications shall be contained in separate communication board.
5. Shall allow access of up to 62 network variables (SNVT). Shall be compatible with all open controllers
6. Baud rate Controller shall be selectable using a dipswitch.
7. Shall have an LED display independently showing the status of serial communication, running, errors, power, all digital outputs, and all analog inputs.
8. Shall accept the following inputs: space temperature, setpoint adjustment, outdoor air temperature, indoor air quality, outdoor air quality, compressor lock-out, fire shutdown, enthalpy switch, and fan status/filter status/ humidity/ remote occupancy.
9. Shall provide the following outputs: economizer, fan, cooling stage 1, cooling stage 2, heat stage 1, heat stage 2, heat stage 3/ exhaust/ reversing valve.
10. Shall have built-in surge protection circuitry through solid state polyswitches. Polyswitches shall be used on incoming power and network connections. Polyswitches will return to normal when the “trip” condition clears.
11. Shall have a battery back-up capable of a minimum of 10,000 hours of data and time clock retention during power outages.
12. Shall have built-in support for Carrier technician tool.
13. Shall include an EIA-485 protocol communication port, an access port for connection of either a computer or a Carrier technician tool, an EIA-485 port for network communication to intelligent space sensors and displays, and a port to connect an optional LonWorks communications card.
14. Software upgrades will be accomplished by either local or remote download. No software upgrades through chip replacements are allowed.

23 09 33 Electric and Electronic Control System for HVAC

23 09 33.13 Decentralized, Rooftop Units:

23 09 33.13.A. General:

1. Shall be complete with self-contained low-voltage control circuit protected by a resettable circuit breaker on the 24-v transformer side. Transformer shall have 75VA capability.
2. Shall utilize color-coded wiring.
3. Shall include a central control terminal board to conveniently and safely provide connection points for vital control functions such as: smoke detectors, phase monitor, economizer, thermostat, DDC control options, and low and high pressure switches.
4. Unit shall include a minimum of one 8-pin screw terminal connection board for connection of control wiring.

23 09 33.23.B. Safeties:

1. Compressor over-temperature, over current.

2. Low-pressure switch.
   a. Units with 2 compressors shall have different sized connectors for the circuit 1 and circuit 2 low and high pressure switches. They shall physically prevent the cross-wiring of the safety switches between circuits 1 and 2.
   b. Low pressure switch shall use different color wire than the high pressure switch. The purpose is to assist the installer and service technician to correctly wire and or troubleshoot the rooftop unit.
3. High-pressure switch.
   a. Units with 2 compressors shall have different sized connectors for the circuit 1 and circuit 2 low and high pressure switches. They shall physically prevent the cross-wiring of the safety switches between circuits 1 and 2.
   b. High pressure switch shall use different color wire than the low pressure switch. The purpose is to assist the installer and service technician to correctly wire and or troubleshoot the rooftop unit.
4. Automatic reset, motor thermal overload protector.

23 09 93 Sequence of Operations for HVAC Controls

23 09 93.13 Decentralized, Rooftop Units:

23 09 93.13 INSERT SEQUENCE OF OPERATION

23 40 13 Panel Air Filters

23 40 13.13 Decentralized, Rooftop Units:

23 40 13.13.A. Standard filter section

1. Shall consist of factory-installed, low velocity, throwaway 51mm (2-in.) thick fiberglass filters of commercially available sizes.
2. Unit shall use only one filter size. Multiple sizes are not acceptable.
3. Filters shall be accessible through an access panel with “no-tool” removal as described in the unit cabinet section of this specification (23 81 19.13.H).

23 81 19 Self-Contained Air Conditioners

23 81 19.13 Small-Capacity Self-Contained Air Conditioners (50TC-*07-16)

23 81 19.13.A. General

1. Outdoor, rooftop mounted, electrically controlled, heating and cooling unit utilizing a(n) hermetic scroll compressor(s) for cooling duty and gas combustion for heating duty.
2. Factory assembled, single-piece heating and cooling rooftop unit. Contained within the unit enclosure shall be all factory wiring, piping, controls, and special features required prior to field start-up.
3. Unit shall use environmentally safe, Puron refrigerant.
4. Unit shall be installed in accordance with the manufacturer’s instructions.
5. Unit must be selected and installed in compliance with local, state, and federal codes.

23 81 19.13.B. Quality Assurance

1. Unit meets ASHRAE 90.1 minimum efficiency requirements.
2. Unit shall be rated in accordance with AHRI Standards 210/240 and 340/360.
3. Unit shall be designed to conform to ASHRAE 15, 2001.
4. Unit shall be UL-tested and certified in accordance with ANSI Z21.47 Standards and UL-listed and certified under Canadian standards as a total package for safety requirements.
5. Insulation and adhesive shall meet NFPA 90A requirements for flame spread and smoke generation.
6. Unit casing shall be capable of withstanding 500-hour salt spray exposure per ASTM B117 (scribed specimen).
7. Unit casing shall be capable of withstanding Federal Test Method Standard No. 141 (Method 6061) 5000-hour salt spray.
8. Unit shall be designed in accordance with ISO 9001:2000, and shall be manufactured in a facility registered by ISO 9001:2000.
9. Roof curb shall be designed to conform to NRCA Standards.
10. Unit shall be subjected to a completely automated run test on the assembly line. The data for each unit will be stored at the factory, and must be available upon request.
11. Unit shall be designed in accordance with UL Standard 1995, including tested to withstand rain.
12. Unit shall be constructed to prevent intrusion of snow and tested to prevent snow intrusion into the control box up to 40 mph.
13. Unit shake tested to assurance level 1, ASTM D4169 to ensure shipping reliability.

23 81 19.13.C. Delivery, Storage, and Handling

1. Unit shall be stored and handled per manufacturer's recommendations.
2. Lifted by crane requires either shipping top panel or spreader bars.
3. Unit shall only be stored or positioned in the upright position.

23 81 19.13.D. Project Conditions

1. As specified in the contract.

23 81 19.13.E. Project Conditions

1. As specified in the contract.

23 81 19.13.F. Operating Characteristics

1. Unit shall be capable of starting and running at 52°C (125°F) ambient outdoor temperature, meeting maximum load criteria of AHRI Standard 210/240 or 340/360 at ± 10% voltage.
2. Compressor with standard controls shall be capable of operation from 4°C (40°F) , ambient outdoor temperatures. Accessory winter start kit is necessary if mechanically cooling at ambient temperatures below -4°C (25°F).
3. Unit shall discharge supply air vertically or horizontally as shown on contract drawings.
4. Unit shall be factory configured for vertical supply & return configurations.
5. Unit shall be field convertible from vertical to horizontal configuration
6. Unit shall be capable of mixed operation: vertical supply with horizontal return or horizontal supply with vertical return.

23 81 19.13.G. Electrical Requirements

1. Main power supply voltage, phase, and frequency must match those required by the manufacturer.

23 81 19.13.H. Unit Cabinet

1. Unit cabinet shall be constructed of galvanized steel, and shall be bonderized and coated with a pre-painted baked enamel finish on all externally exposed surfaces.
2. Unit cabinet exterior paint shall be: film thickness, (dry) 0.003 inches minimum, gloss (per ASTM D523, 16°C/60°F): 60, Hardness: H-2H Pencil hardness.
3. Evaporator fan compartment interior cabinet insulation shall conform to AHRI Standards 210/240 or 340/360 minimum exterior sweat criteria. Interior surfaces shall be insulated with a minimum 13mm (1/2-in.) thick, .45kg (1-lb) density, flexible fiberglass insulation, neoprene coated on the air side. Aluminum foil-faced fiberglass insulation shall be used in the heat compartment.
4. Base of unit shall have a minimum of four locations for thru-the-base gas and electrical connections (factory installed or field installed), standard.
5. Base Rail
   a. Unit shall have base rails on a minimum of 2 sides.
   b. Holes shall be provided in the base rails for rigging shackles to facilitate maneuvering and overhead rigging.
   c. Holes shall be provided in the base rail for moving the rooftop by fork truck.
   d. Base rail shall be a minimum of 16 gauge thickness.
6. Condensate pan and connections:
   a. Shall be a sloped condensate drain pan made of a non-corrosive material.
   b. Shall comply with ASHRAE Standard 62.
   c. Shall use a 19mm (3/4-in.) -14 NPT drain connection, possible either through the bottom or end of the drain pan. Connection shall be made per manufacturer's recommendations.
7. Top panel:
   a. Shall be a single piece top panel on 07 thru 14 sizes.
8. Electrical Connections
   a. All unit power wiring shall enter unit cabinet at a single, factory-prepared, knockout location.
   b. Thru-the-base capability
      (1.) Standard unit shall have a thru-the-base electrical location(s) using a raised, embossed portion of the unit basepan.
      (2.) Optional, factory-approved, water-tight connection method must be used for thru-the-base electrical connections.
      (3.) No basepan penetration, other than those authorized by the manufacturer, is permitted.
9. Component access panels (standard)
   a. Cabinet panels shall be easily removable for servicing.
   b. Unit shall have one factory installed, tool-less, removable, filter access panel.

c. Panels covering control box, indoor fan, indoor fan motor, gas components (where applicable), and compressors shall have molded composite handles.
d. Handles shall be UV modified, composite. permanently attached, and recessed into the panel.
e. Screws on the vertical portion of all removable access panel shall engage into heat resistant, molded composite collars.
f. Collars shall be removable and easily replaceable using manufacturer recommended parts.

23 81 19.13.I. N/A

23 81 19.13.J. Coils

1. Standard Aluminum/Copper Coils:
   a. Standard evaporator and condenser coils shall have aluminum lanced plate fins mechanically bonded to seamless internally grooved copper tubes with all joints brazed.
   b. Evaporator coils shall be leak tested to 150 psig, pressure tested to 450 psig, and qualified to UL 1995 burst test at 1775 psig.
   c. Condenser coils shall be leak tested to 150 psig, pressure tested to 650 psig, and qualified to UL 1995 burst test at 1980 psig.
2. Optional Pre-coated aluminum-fin condenser coils:
   a. Shall have a durable epoxy-phenolic coating to provide protection in mildly corrosive coastal environments.
   b. Coating shall be applied to the aluminum fin stock prior to the fin stamping process to create an inert barrier between the aluminum fin and copper tube.
   c. Epoxy-phenolic barrier shall minimize galvanic action between dissimilar metals.
3. Optional Copper-fin evaporator and condenser coils:
   a. Shall be constructed of copper fins mechanically bonded to copper tubes and copper tube sheets.
   b. Galvanized steel tube sheets shall not be acceptable.
   c. A polymer strip shall prevent coil assembly from contacting the sheet metal coil pan to minimize potential for galvanic corrosion between coil and pan.
4. Optional E-coated aluminum-fin evaporator and condenser coils:
   a. Shall have a flexible epoxy polymer coating uniformly applied to all coil surface areas without material bridging between fins.
   b. Coating process shall ensure complete coil encapsulation of tubes, fins and headers.
   c. Color shall be high gloss black with gloss per ASTM D523-89.
   d. Uniform dry film thickness from 0.8 to 1.2 mil on all surface areas including fin edges.
   e. Superior hardness characteristics of 2H per ASTM D3363-92A and cross-hatch adhesion of 4B-5B per ASTM D3359-93.
   f. Impact resistance shall be up to 160 in.-lb (ASTM D2794-93).
   g. Humidity and water immersion resistance shall be up to minimum 1000 and 250 hours respectively (ASTM D2247-92 and ASTM D870-92).
   h. Corrosion durability shall be confirmed through testing to be no less than 1000 hours salt spray per ASTM B117-90.

23 81 19.13.K. Refrigerant Components

1. Refrigerant circuit shall include the following control, safety, and maintenance features:
   a. Fixed orifice metering system shall prevent mal-distribution of two-phase refrigerant by including multiple fixed orifice devices in each refrigeration circuit. Each orifice is to be optimized to the coil circuit it serves.
   b. Refrigerant filter drier.
   c. Service gauge connections on suction and discharge lines.
   d. Pressure gauge access through a specially designed access port in the top panel of the unit.
2. There shall be gauge line access port in the skin of the rooftop, covered by a black, removable plug.
   a. The plug shall be easy to remove and replace.
   b. When the plug is removed, the gauge access port shall enable maintenance personnel to route their pressure gauge lines.
   c. This gauge access port shall facilitate correct and accurate condenser pressure readings by enabling the reading with the compressor access panel on.
   d. The plug shall be made of a leak proof, UV-resistant, composite material.
3. Compressors
   a. Unit shall use fully hermetic, scroll compressor for each independent refrigeration circuit.

b. Compressor motors shall be cooled by refrigerant gas passing through motor windings.
c. Compressors shall be internally protected from high discharge temperature conditions.
d. Compressors shall be protected from an over-temperature and over-amperage conditions by an internal, motor overload device.
e. Compressor shall be factory mounted on rubber grommets.
f. Compressor motors shall have internal line break thermal, current overload and high pressure differential protection.
g. Crankcase heaters shall not be required for normal operating range, unless provided by the factory.

23 81 19.13.L. Filter Section

1. Filters access is specified in the unit cabinet section of this specification.
2. Filters shall be held in place by a pivoting filter tray, facilitating easy removal and installation.
3. Shall consist of factory-installed, low velocity, throw-away 51mm (2-in.) thick fiberglass filters.
4. Filters shall be standard, commercially available sizes.
5. Only one size filter per unit is allowed.

23 81 19.13.M. Evaporator Fan and Motor

1. Evaporator fan motor:
   a. Shall have permanently lubricated bearings.
   b. Shall have inherent automatic-reset thermal overload protection or circuit breaker.
   c. Shall have a maximum continuous bhp rating for continuous duty operation; no safety factors above that rating shall be required.
2. Belt-driven Evaporator Fan:
   a. Belt drive shall include an adjustable-pitch motor pulley.
   b. Shall use sealed, permanently lubricated ball-bearing type.
   c. Blower fan shall be double-inlet type with forward-curved blades.
   d. Shall be constructed from steel with a corrosion resistant finish and dynamically balanced.

23 81 19.13.N. Condenser Fans and Motors

1. Condenser fan motors:
   a. Shall be a totally enclosed motor.
   b. Shall use permanently lubricated bearings.
   c. Shall have inherent thermal overload protection with an automatic reset feature.
   d. Shall use a shaft-down design on 07 to 14 models.
2. Condenser Fans:
   a. Shall be a direct-driven propeller type fan.
   b. Shall have aluminum blades riveted to corrosion-resistant steel spiders and shall be dynamically balanced.

23 81 19.13.O. Special Features, Options and Accessories

1. Integrated Economizers:
   a. Integrated, gear-driven parallel modulating blade design type capable of simultaneous economizer and compressor operation.
   b. Independent modules for vertical or horizontal return configurations shall be available. Vertical return modules shall be available as a factory installed option.
   c. Damper blades shall be galvanized steel with composite gears. Plastic or composite blades on intake or return shall not be acceptable.
   d. Shall include all hardware and controls to provide free cooling with outdoor air when temperature and/or humidity are below setpoints.
   e. Shall be equipped with gear driven dampers for both the outdoor ventilation air and the return air for positive air stream control.
   f. Shall be equipped with low-leakage dampers, not to exceed 2% leakage at 1 in. wg pressure differential.
   g. Shall be capable of introducing up to 100% outdoor air.
   h. Shall be equipped with a barometric relief damper capable of relieving up to 100% return air.
   i. Shall be designed to close damper(s) during loss-of-power situations with spring return built into motor.
   j. Dry bulb outdoor-air temperature sensor shall be provided as standard. Outdoor air sensor setpoint shall be adjustable and shall range from 4 to 38°C (40 to 100°F). Additional sensor options shall be available as accessories.
   k. The economizer controller shall also provide control of an accessory power exhaust unit. function. Factory set at 100%, with a range of 0% to 100%.

l. The economizer shall maintain minimum airflow into the building during occupied period and provide design ventilation rate for full occupancy. A remote potentiometer may be used to override the damper set-point.
m. Dampers shall be completely closed when the unit is in the unoccupied mode.
n. Economizer controller shall accept a 2-10Vdc CO_2 sensor input for IAQ/DCV control. In this mode, dampers shall modulate the outdoor-air damper to provide ventilation based on the sensor input.
o. Compressor lockout sensor shall open at 2°C (35°F) and close closes at 10°C (50°F).
p. Actuator shall be direct coupled to economizer gear. No linkage arms or control rods shall be acceptable.
q. Economizer controller shall provide indications when in free cooling mode, in the DCV mode, or the exhaust fan contact is closed.

2. Two-Position Damper
   a. Damper shall be a Two-Position Damper. Damper travel shall be from the full closed position to the field adjustable %-open setpoint.
   b. Damper shall include adjustable damper travel from 25% to 100% (full open).
   c. Damper shall include single or dual blade, gear driven dampers and actuator motor.
   d. Actuator shall be direct coupled to damper gear. No linkage arms or control rods shall be acceptable.
   e. Damper will admit up to 100% outdoor air for applicable rooftop units.
   f. Damper shall close upon indoor (evaporator) fan shutoff and/or loss of power.
   g. The damper actuator shall plug into the rooftop unit's wiring harness plug. No hard wiring shall be required.
   h. Outside air hood shall include aluminum water entrainment filter
3. Manual damper
   a. Manual damper package shall consist of damper, air inlet screen, and rain hood which can be preset to admit up to 50% outdoor air for year round ventilation.
4. Head Pressure Control Package
   a. Controller shall control coil head pressure by condenser-fan speed modulation or condenser-fan cycling and wind baffles.
   b. Shall consist of solid-state control and condenser-coil temperature sensor to maintain condensing temperature between 32°C (90°F) and 43°C (110°F) at outdoor ambient temperatures down to -29°C (-20°F).
5. Condenser Coil Hail Guard Assembly
   a. Shall protect against damage from hail.
   b. Shall be louvered design.
6. Unit-Mounted, Non-Fused Disconnect Switch:
   a. Switch shall be factory-installed, internally mounted.
   b. National Electric Code (NEC) and UL approved non-fused switch shall provide unit power shutoff.
   c. Shall be accessible from outside the unit
   d. Shall provide local shutdown and lockout capability.
7. Thru-the-Base Connectors:
   a. Kits shall provide connectors to permit electrical connections to be brought to the unit through the unit basepan.
   b. Minimum of four connection locations per unit.
8. Propeller Power Exhaust:
   a. Power exhaust shall be used in conjunction with an integrated economizer.
   b. Independent modules for vertical or horizontal return configurations shall be available.
   c. Horizontal power exhaust is shall be mounted in return ductwork.
   d. Power exhaust shall be controlled by economizer controller operation. Exhaust fans shall be energized when dampers open past the 0-100% adjustable setpoint on the economizer control.
9. Roof Curbs (Vertical):
   a. Full perimeter roof curb with exhaust capability providing separate air streams for energy recovery from the exhaust air without supply air contamination.
   b. Formed galvanized steel with wood nailer strip and shall be capable of supporting entire unit weight.
   c. Permits installation and securing of ductwork to curb prior to mounting unit on the curb.
10. High-Static Indoor Fan Motor(s) and Drive(s) :
    a. High-static motor(s) and drive(s) shall be factory-installed to provide additional performance range.

11. Condenser Coil Grille:
    a. The grille protects the condenser coil from damage by large objects without increasing unit clearances.
12. Thru-the-Bottom Utility Connectors:
    a. Kit shall provide connectors to permit gas and electrical connections to be brought to the unit through the basepan.
13. Outdoor Air Enthalpy Sensor:
    a. The outdoor air enthalpy sensor shall be used to provide single enthalpy control. When used in conjunction with a return air enthalpy sensor, the unit will provide differential enthalpy control. The sensor allows the unit to determine if outside air is suitable for free cooling.
14. Return Air Enthalpy Sensor:
    a. The return air enthalpy sensor shall be used in conjunction with an outdoor air enthalpy sensor to provide differential enthalpy control.
15. Indoor Air Quality (CO_2) Sensor:
    a. Shall be able to provide demand ventilation indoor air quality (IAQ) control.
    b. The IAQ sensor shall be available in duct mount, wall mount, or wall mount with LED display. The set-point shall have adjustment capability.
16. Smoke detectors (Factory-installed only):
    a. Shall be a Four-Wire Controller and Detector.
    b. Shall be environmental compensated with differential sensing for reliable, stable, and drift-free sensitivity.
    c. Shall use magnet-activated test/reset sensor switches.
    d. Shall have tool-less connection terminal access.
    e. Shall have a recessed momentary switch for testing and resetting the detector.
    f. Controller shall include:
        (1.) One set of normally open alarm initiation contacts for connection to an initiating device circuit on a fire alarm control panel.
        (2.) Two Form-C auxiliary alarm relays for interface with rooftop unit or other equipment.
        (3.) One Form-C supervision (trouble) relay to control the operation of the Trouble LED on a remote test/reset station.
        (4.) Capable of direct connection to two individual detector modules.
        (5.) Can be wired to up to 14 other duct smoke detectors for multiple fan shutdown applications.
17. Winter start kit
    a. Shall contain a bypass device around the low pressure switch.
    b. Shall be required when mechanical cooling is required down to -4°C (25°F).
    c. Shall not be required to operate on an economizer when below an outdoor ambient of 4°C (40°F).
18. Time Guard
    a. Shall prevent compressor short cycling by providing a 5-minute delay (±2 minutes) before restarting a compressor after shutdown for any reason.
    b. One device shall be required per compressor.
19. Electric Heat:
    a. Heating Section
        (1.) Heater element open coil resistance wire, nickel-chrome alloy, 7.37mm (0.29- in.) inside diameter, strung through ceramic insulators mounted on metal frame. Coil ends are staked and welded to terminal screw slots.
        (2.) Heater assemblies are provided with integral fusing for protection of internal heater circuits not exceeding 48 amps each. Auto reset thermo limit controls, magnetic heater contactors (24 v coil) and terminal block all mounted in electric heater control box (minimum 18 ga galvanized steel) attached to end of heater assembly.

Copyright 2012 Carrier Corp. • 7310 W. Morris St. • Indianapolis, IN 46231 Printed in U.S.A. Edition Date: 02/12 **Catalog No: 50TC–C05PD**

Manufacturer reserves the right to change, at any time, specifications and designs without notice and without obligations.

Replaces: 50TC–C03PD