Service Manual

15C Inverter

XPOWER BLUE / XPOWER SAFIRUS



This manual apply to the models below:

42KHC009DS/38KHC009DSP

42KHC012DS/38KHC012DSP

42KHC018DS/38KHC018DSP

42KHC024DS/38KHC024DSP

42QHC009ESW/ 38QHC009ESWP

42QHC012ESW/ 38QHC012ESWP

42QHC018DSW/38QHC018DSWP

CONTENTS

1. Precaution 1
1.1 Safety Precaution 1
1.2 Warning 1
2. Function 4
3. Dimension 5
3.1 Indoor Unit 5
3.2 Outdoor Unit 7
4. Wiring Diagram 8
5. Refrigerant Cycle Diagram 12
6. Installation Details 13
6.1 Wrench torque sheet for installation 13
6.2 Connecting the cables 13
6.3 Pipe length and the elevation 14
6.4 Installation for the first time 15
6.5 Adding the refrigerant after running the system for many years 16
6.6 Re-installation while the indoor unit need to be repaired 16
6.7 Re-installation while the outdoor unit need to be repaired 17
7. Operation Characteristics 19
8. Electronic function 20
8.1 Abbreviation 20
8.2 Display function 20
8.3 Main Protection 221
8.4 Operation Modes and Functions 22
9. Troubleshooting 29
9.1 Indoor Unit Error Display 30
9.2 Trouble shooting 31

1. Precaution

1.1 Safety Precaution

■ **To prevent injury to the user or other people and property damage, the following instructions must be followed.**

■ **Incorrect operation due to ignoring instruction will cause harm or damage.**

■ **Before service the unit, be sure to read this service manual at first.**

1.2 Warning

➢ Installation

■ **Do not use a defective or underrated circuit breaker. Use this appliance on a dedicated circuit.**

There is risk of fire or electric shock.

■ **For electrical work, contact the dealer, seller, a qualified electrician, or an authorized service center.**

Do not disassemble or repair the product, there is risk of fire or electric shock.

■ **Always ground the product.**

There is risk of fire or electric shock.

■ **Install the panel and the cover of control box securely.**

There is risk of fire of electric shock.

■ **Always install a dedicated circuit and breaker.**

Improper wiring or installation may cause fore or electric shock.

■ **Use the correctly rated breaker of fuse.**

There is risk of fire or electric shock.

■ **Do not modify or extend the power cable.**

There is risk of fire or electric shock.

■ **Do not install, remove, or reinstall the unit by yourself (customer).**

There is risk of fire, electric shock, explosion, or injury.

■ **Be caution when unpacking and installing the product.**

Sharp edges could cause injury, be especially careful of the case edges and the fins on the condenser and evaporator.

■ **For installation, always contact the dealer or an authorized service center.**

■ **Do not install the product on a defective installation stand.**

■ **Be sure the installation area does not deteriorate with age.**

If the base collapses, the air conditioner could fall with it, causing property damage, product failure, and personal injury.

■ **Do not let the air conditioner run for a long time when the humidity is very high and a door or a window is left open.**

■ **Take care to ensure that power cable could not be pulled out or damaged during operation.**

There is risk of fire or electric shock.

■ **Do not place anything on the power cable.**

There is risk of fire or electric shock.

■ **Do not plug or unplug the power supply plug during operation.**

There is risk of fire or electric shock.

■ **Do not touch (operation) the product with wet hands.**

■ **Do not place a heater or other appliance near the power cable.**

There is risk of fire and electric shock.

■ **Do not allow water to run into electrical parts.**

It may cause fire, failure of the product, or electric shock.

■ **Do not store or use flammable gas or combustible near the product.**

There is risk of fire or failure of product.

■ **Do not use the product in a tightly closed space for a long time.**

Oxygen deficiency could occur.

■ **When flammable gas leaks, turn off the gas and open a window for ventilation before turn the product on.**

■ **If strange sounds or smoke comes**

from product, turn the breaker off or disconnect the power supply cable.

There is risk of electric shock or fire.

■ **Stop operation and close the window in storm or hurricane. If possible, remove the product from the window before the hurricane arrives.**

There is risk of property damage, failure of product, or electric shock.

■ **Do not open the inlet grill of the product during operation. (Do not touch the electrostatic filter, if the unit is so equipped.)**

There is risk of physical injury, electric shock, or product failure.

■ **When the product is soaked, contact an authorized service center.**

There is risk of fire or electric shock.

■ **Be caution that water could not enter the product.**

There is risk of fire, electric shock, or product damage.

■ **Ventilate the product from time to time when operating it together with a stove etc.**

There is risk of fire or electric shock.

■ **Turn the main power off when cleaning or maintaining the product.**

There is risk of electric shock.

■ **When the product is not be used for a long time, disconnect the power supply plug or turn off the breaker.**

There is risk of product damage or failure, or unintended operation.

■ **Take care to ensure that nobody could step on or fall onto the outdoor unit.**

This could result in personal injury and product damage.

➢ CAUTION

■ **Always check for gas (refrigerant) leakage after installation or repair of product.**

Low refrigerant levels may cause failure of product.

■ **Install the drain hose to ensure that water is drained away properly.**

A bad connection may cause water leakage.

■ **Keep level even when installing the product.**

It can avoid vibration of water leakage.

■ **Do not install the product where the noise or hot air from the outdoor unit could damage the neighborhoods.**

It may cause a problem for your neighbors.

■ **Use two or more people to lift and transport the product.**

■ **Do not install the product where it will be exposed to sea wind (salt spray) directly.**

It may cause corrosion on the product.

Corrosion, particularly on the condenser and evaporator fins, could cause product malfunction or inefficient operation.

➢ Operational

■ **Do not expose the skin directly to cool air for long time. (Do not sit in the draft).**

■ **Do not use the product for special purposes, such as preserving foods, works of art etc. It is a consumer air conditioner, not a precision refrigerant system.**

There is risk of damage or loss of property.

■ **Do not block the inlet or outlet of air flow.**

■ **Use a soft cloth to clean. Do not use harsh detergents, solvents, etc.**

There is risk of fire, electric shock, or damage to the plastic parts of the product.

■ **Do not touch the metal parts of the product when removing the air filter. They are very sharp.**

■ **Do not step on or put anything on the product. (outdoor units)**

■ **Always insert the filter securely. Clean the filter every two weeks or more often if necessary.**

A dirty filter reduces the efficiency of the air conditioner and could cause product malfunction or damage.

■ **Do not insert hands or other objects**

through air inlet or outlet while the product is operated.

- **Do not drink the water drained from the product.**
- **Use a firm stool or ladder when cleaning or maintaining the product.**

Be careful and avoid personal injury.

- **Replace the all batteries in the remote control with new ones of the same type. Do not mix old and new batteries or different types of batteries.**

There is risk of fire or explosion.

- **Do not recharge or disassemble the batteries. Do not dispose of batteries in a fire.**

They may burn of explode.

- **If the liquid from the batteries gets onto your skin or clothes, wash it well with clean water. Do not use the remote of the batteries have leaked.**

2. Function

Models for Indoor/Outdoor Units

Capacity	Indoor units	Outdoor units
9K	42KHC009DS 42QHC009ESW	38KHC009DSP 38QHC009ESWP
12K	42KHC012DS 42QHC012ESW	38KHC012DSP 38QHC012ESWP
18K	42KHC018DS 42QHC018DSW	38KHC018DSP 38QHC018DSWP
24K	42KHC024DS 42QHC024DSW	38KHC024DSP 38QHC024DSWP

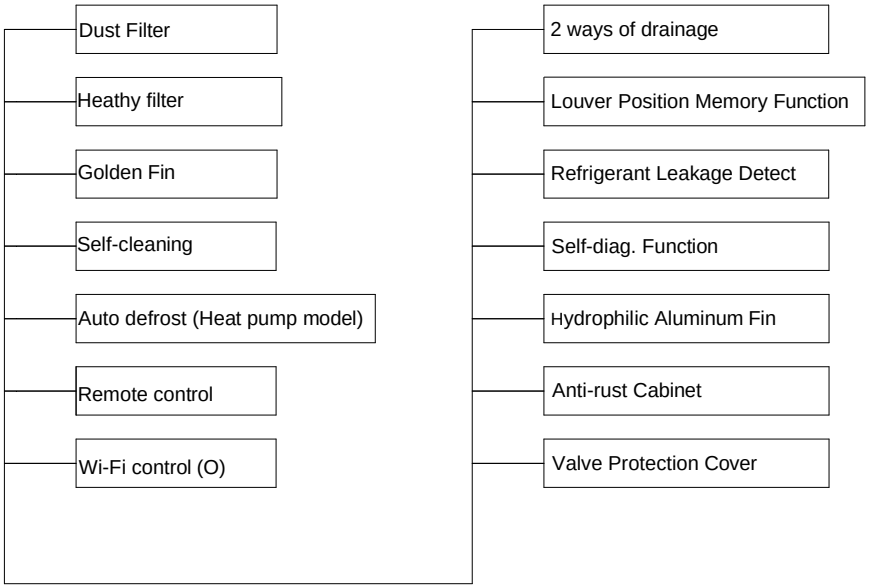

O: Optional

3. Dimension

3.1 Indoor Unit

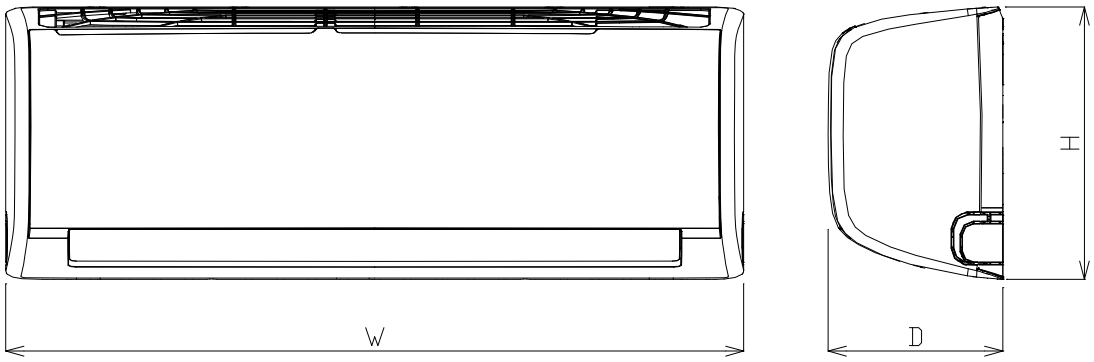

Model	W	D	H
42KHC009DS	730	192	291
42KHC012DS 42QHC009ESW 42QHC012ESW	812	192	300
42KHC018DS 42QHC018DSW	973	218	319
42KHC024DS 42QHC024DSW	1082	225	338

Installation plate:

42KHC009DS:

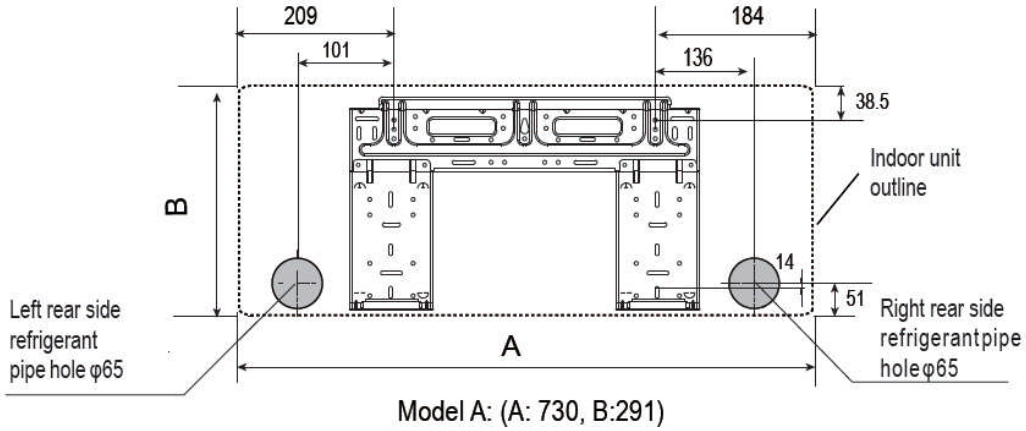

Model A: (A: 730, B:291)

42KHC012DS / 42QHC009ESW / 42QHC012ESW

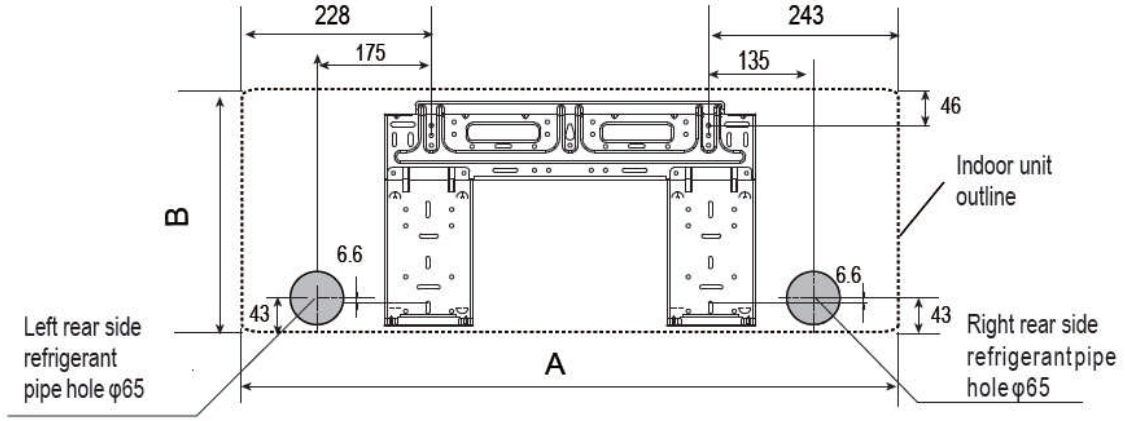

Model B: (A: 812, B:300)

42KHC018DS / 42QHC018DSW

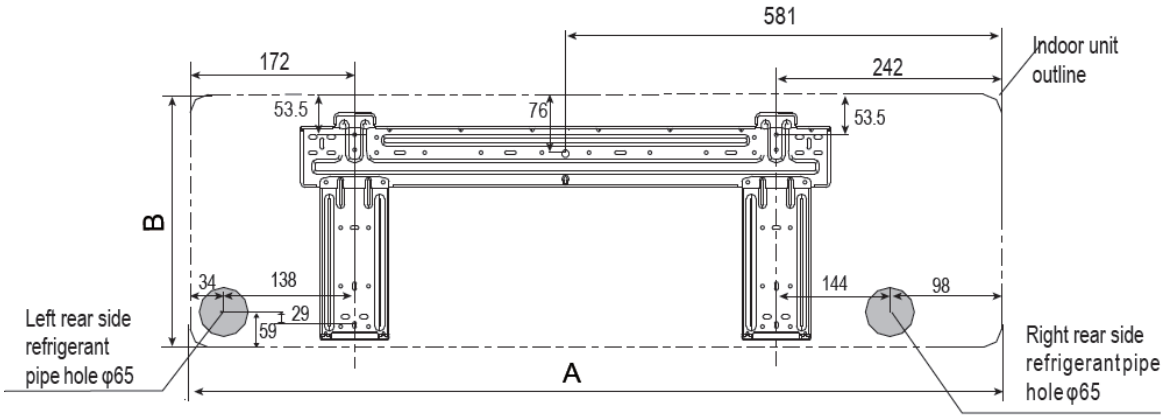

Model C: (A: 973, B:319)

42KHC024DS / 42QHC024DSW

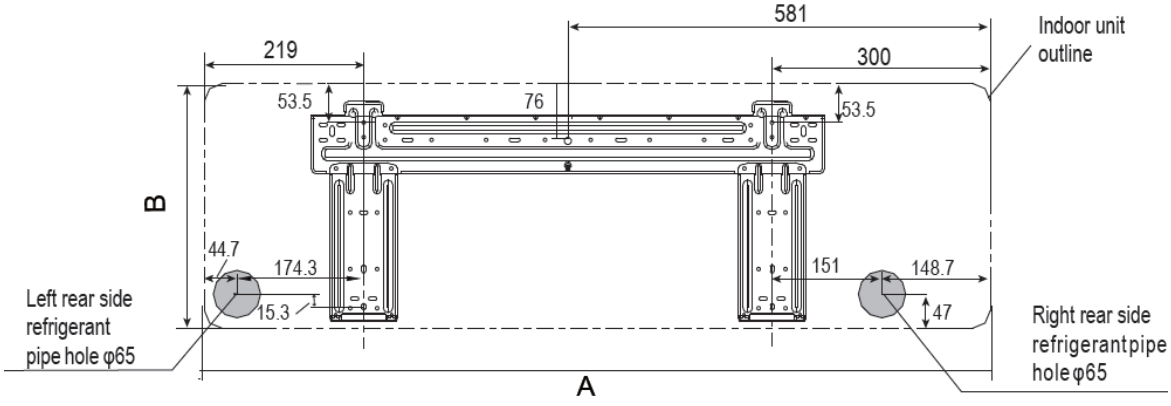

Model D: (A: 1082, B:338)

3.2 Outdoor Unit

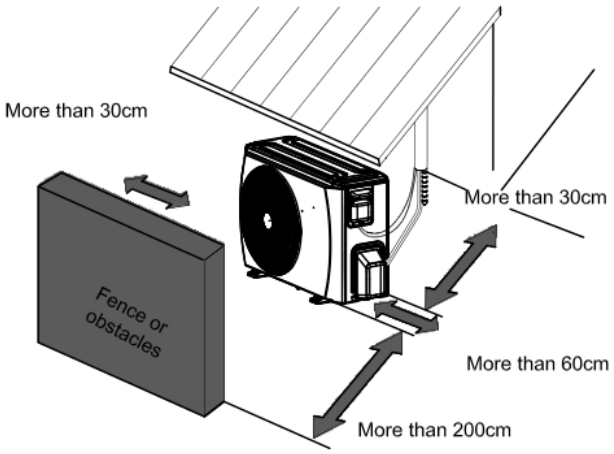

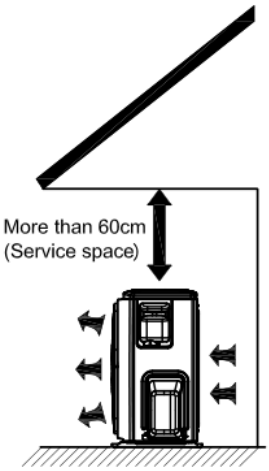

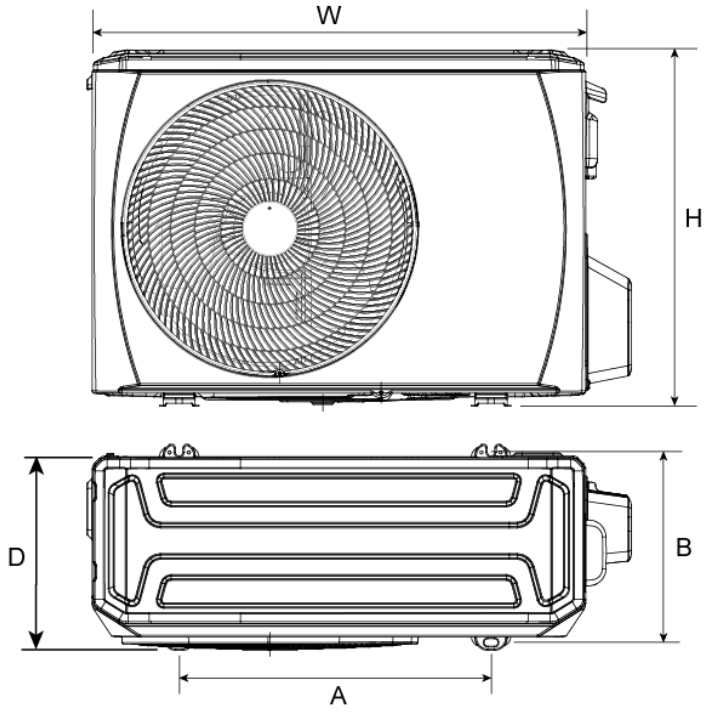

Outdoor Unit Dimension(mm)				Mounting Dimension(mm)	
Outdoor Unit	W	H	D	A	B
38KHC009DSP	700	550	275	460	276
38KHC012DSP	770	555	300	487	298
38KHC018DSP 38QHC009ESWP 38QHC012ESWP	800	554	333	514	340
38KHC024DSP 38QHC024DSWP	845	702	363	540	376

4. Wiring Diagram

Indoor: 42KHC009DS / 42KHC012DS

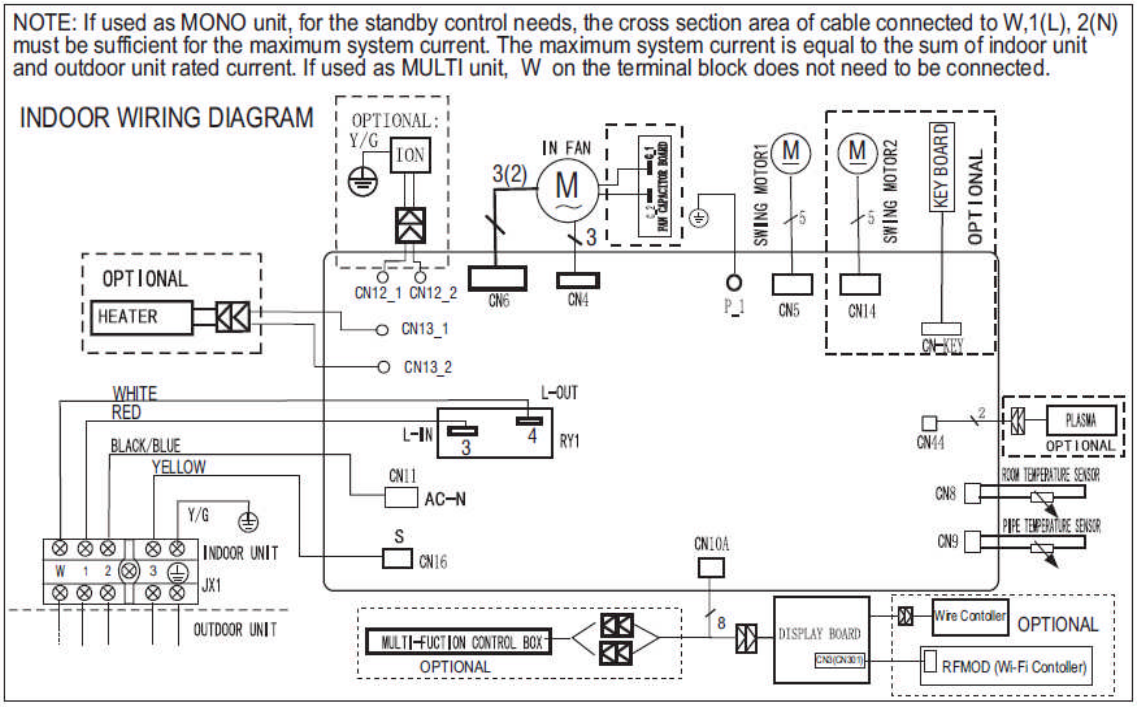

Indoor: 42KHC018DS

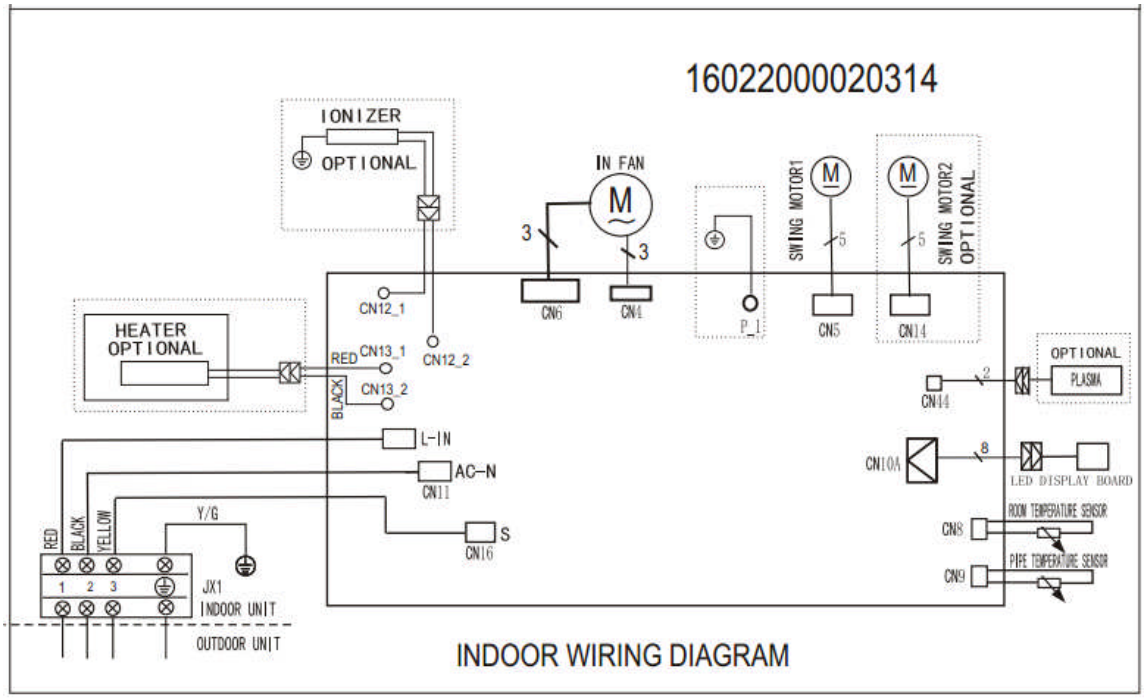

Indoor: 42KHC024DS

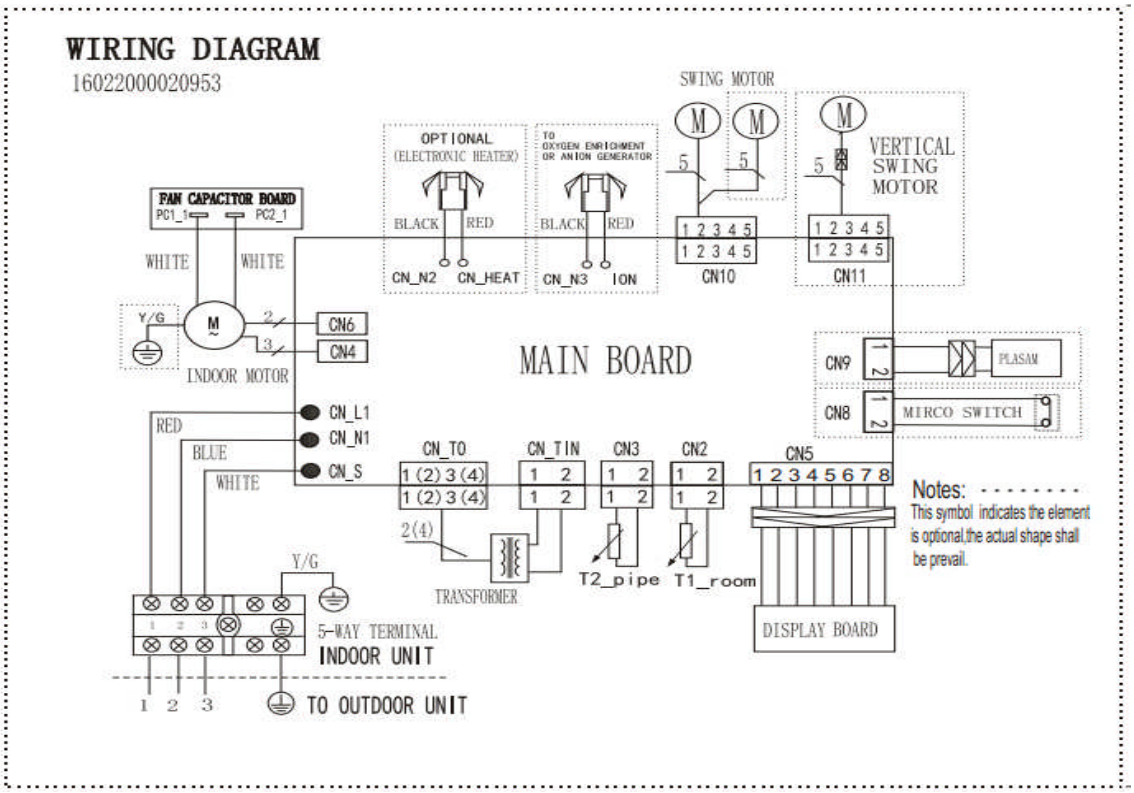

Outdoor 38KHC009DSP / 38KHC012DSP

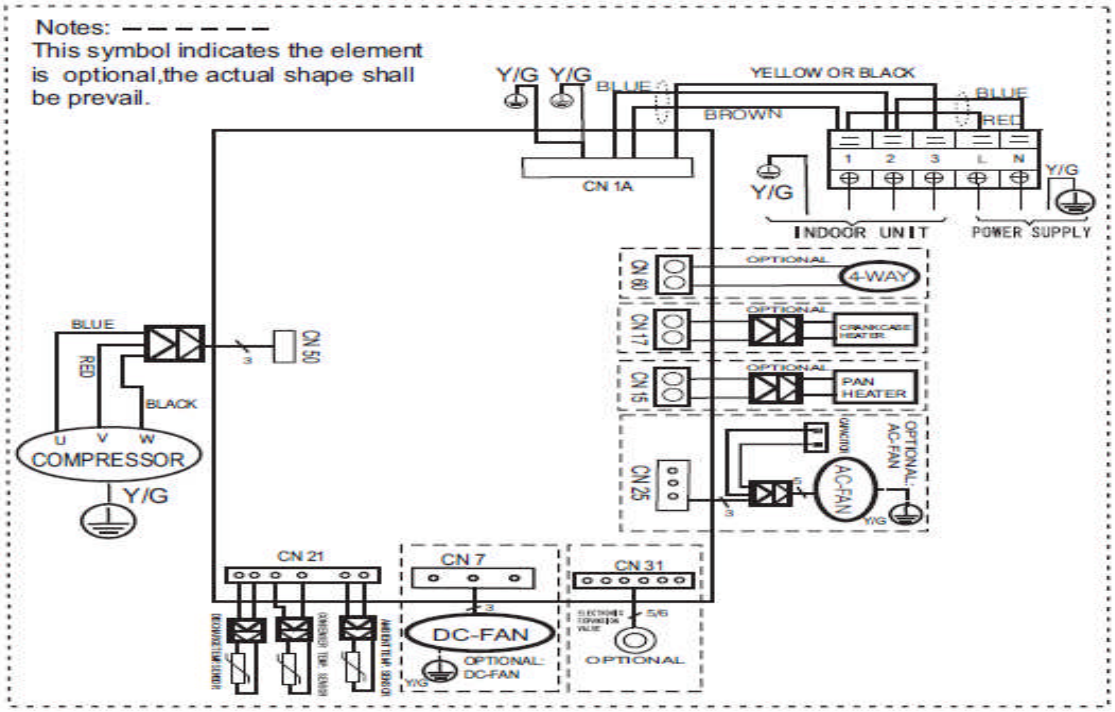

Outdoor 38KHC018DSP / 38KHC024DSP

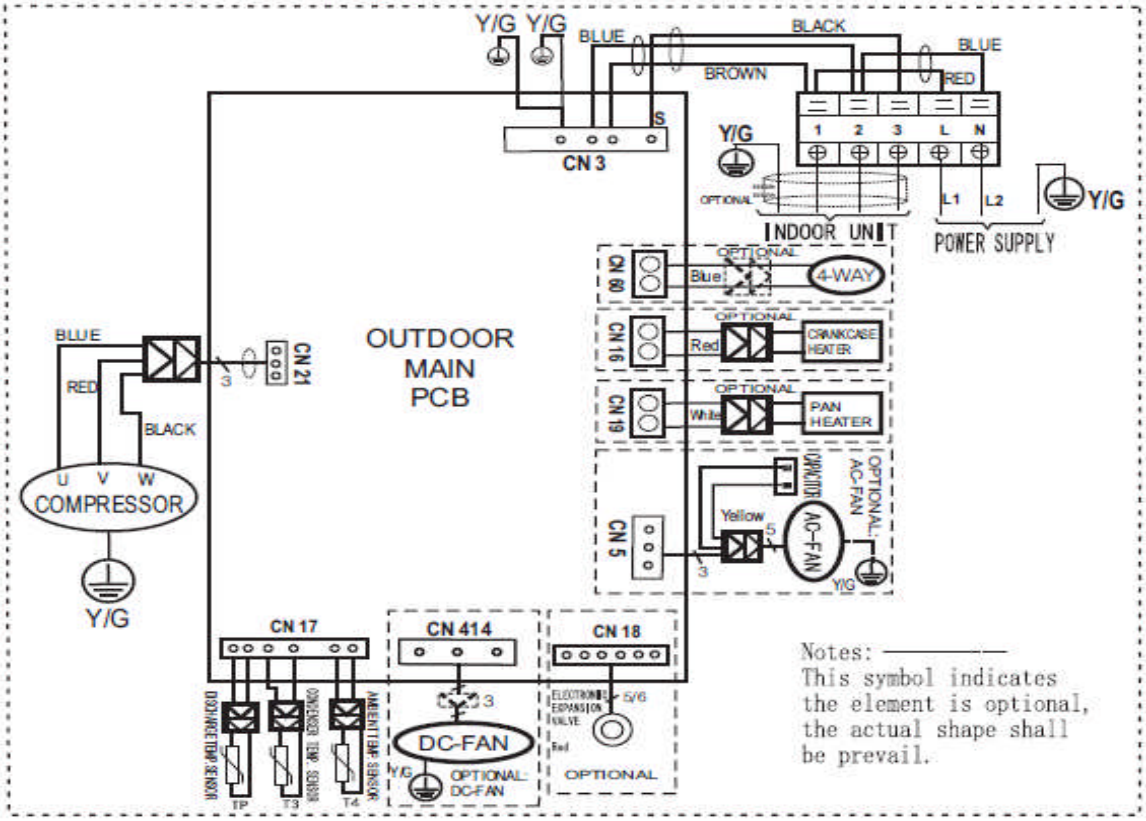

Indoor: 42QHC009ESW / 42QHC012ESW / 42QHC018DSW / 42QHC018DSW

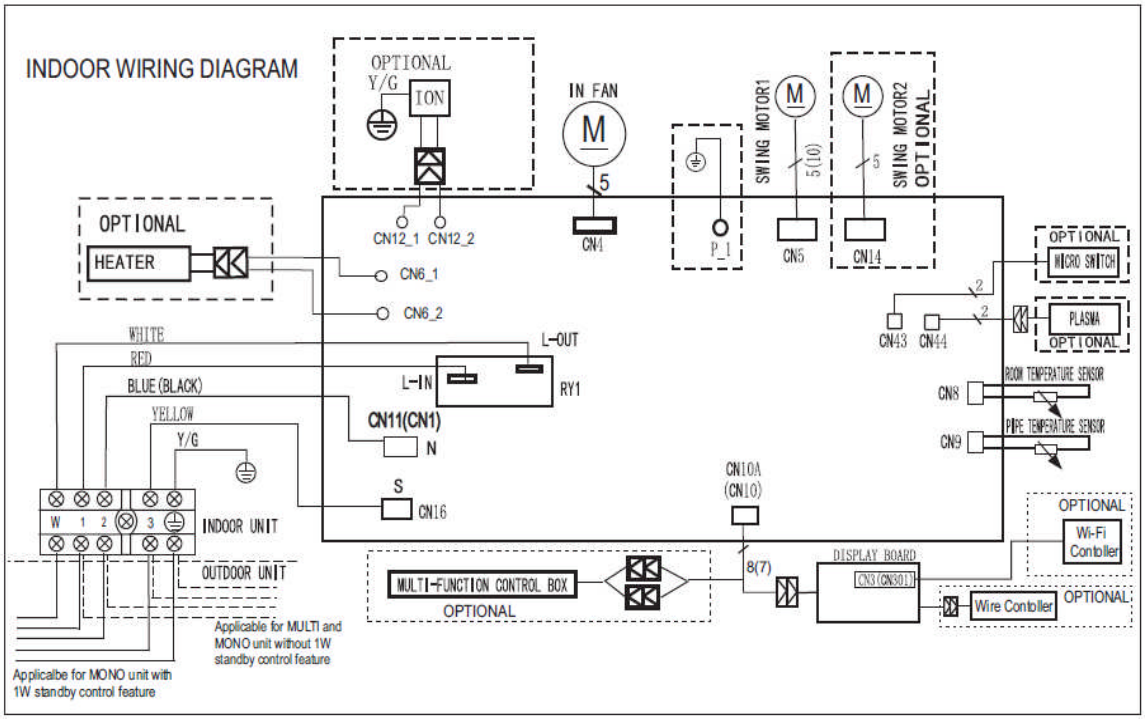

Outdoor 38QHC009ESWP / 38QHC012ESWP

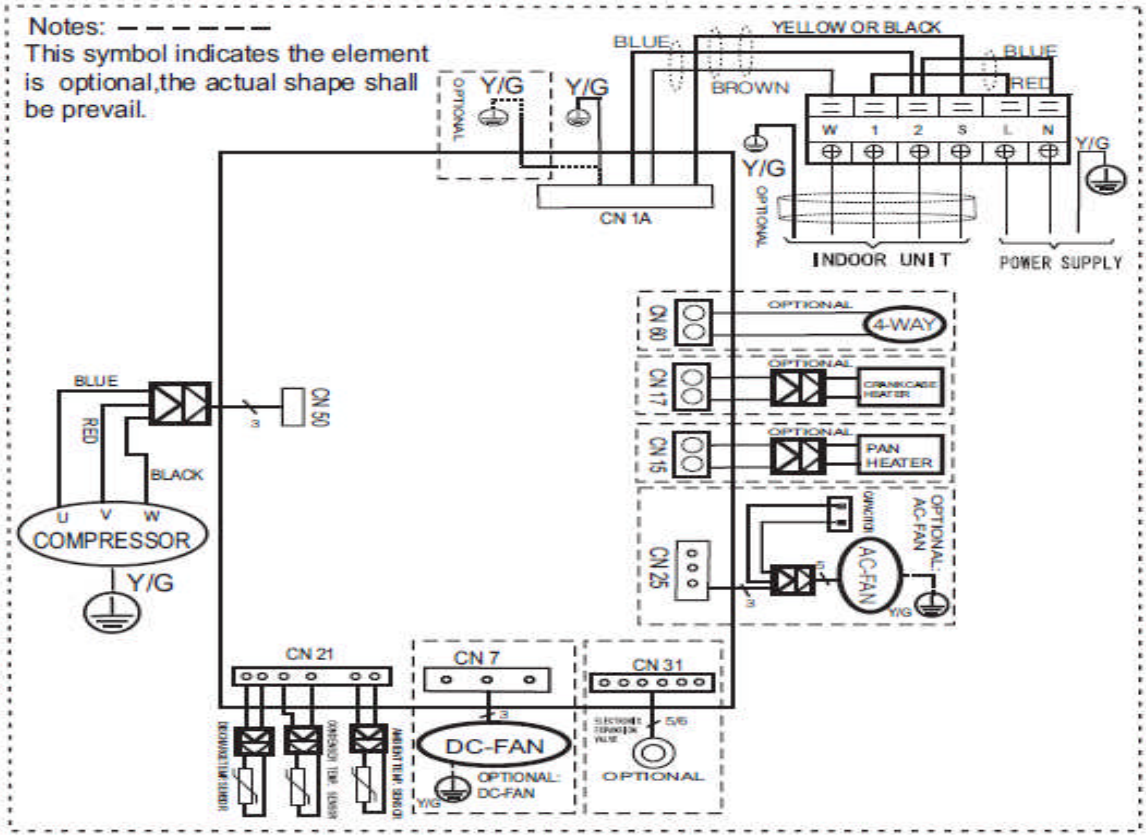

Outdoor 38QHC018DSWP / 38QHC024DSWP

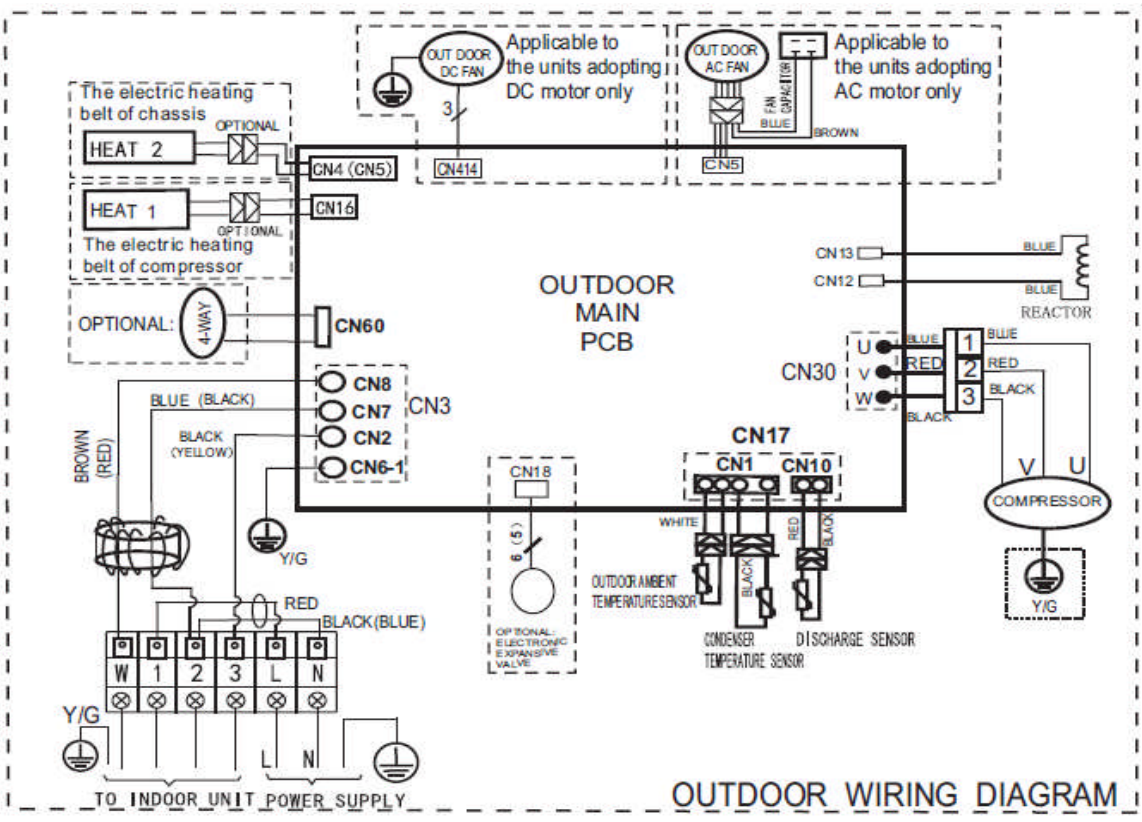

5. Refrigerant Cycle Diagram

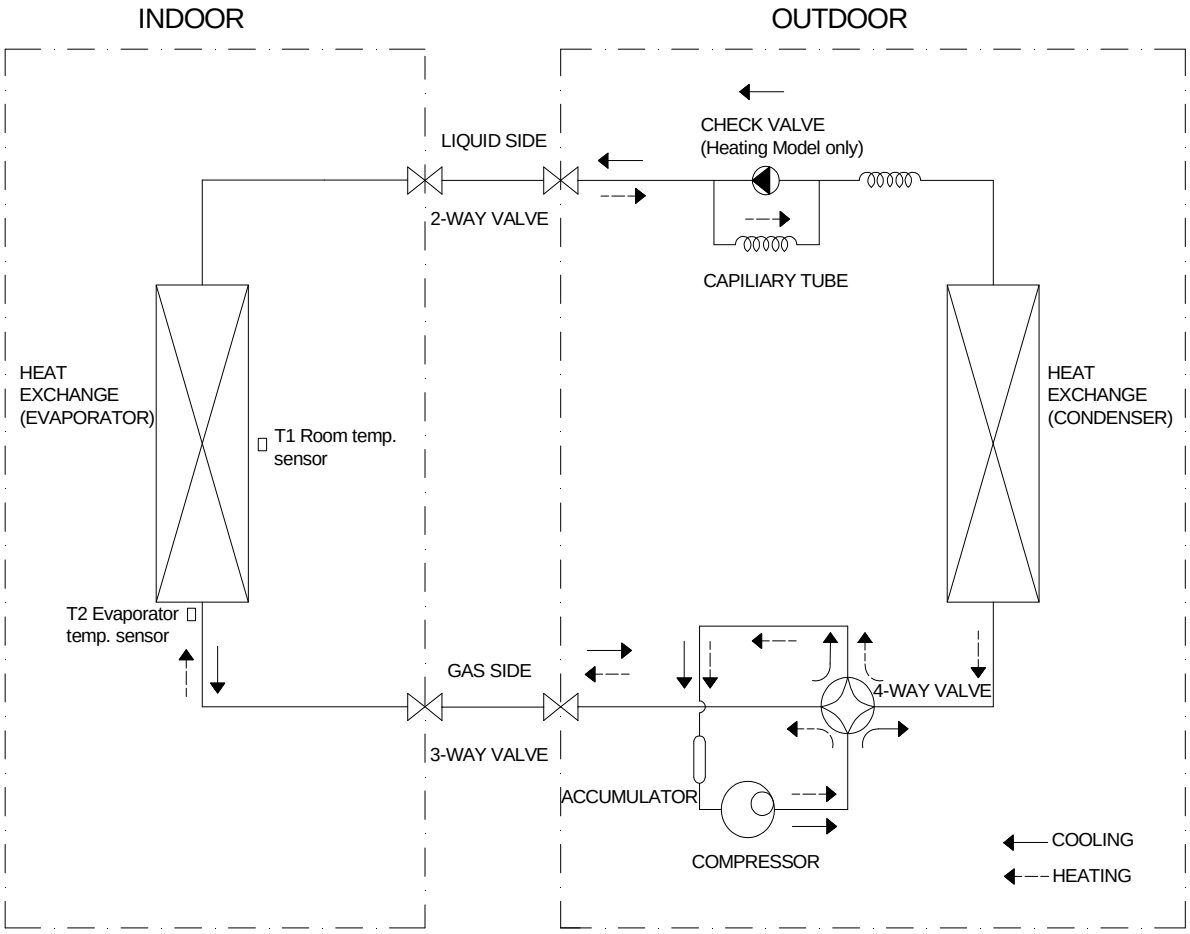

6. Installation Details

6.1 Wrench torque sheet for installation

Outside diameter		Torque	Additional tightening torque
mm	inch	N.cm	N.cm
Φ6.35	1/4	1500(153kgf.cm)	1600(163kgf.cm)
Φ9.52	3/8	2500(255kgf.cm)	2600(265kgf.cm)
Φ12.7	1/2	3500(357kgf.cm)	3600(367kgf.cm)
Φ15.9	5/8	4500(459kgf.cm)	4700(479kgf.cm)
Φ19	3/4	6500(663kgf.cm)	6700(683kgf.cm)

6.2 Connecting the cables

The power cord of connect should be selected according to the following specifications sheet.

Rated current of appliance	Nominal cross-sectional area (mm^2)
>3 and ≤6	0.75
>6 and ≤10	1
>10 and ≤16	1.5
>16 and ≤25	2.5

The cable size and the current of the fuse or switch are determined by the maximum current indicated on the nameplate which located on the side panel of the unit. Please refer to the nameplate before selecting the cable, fuse and switch.

6.3 Pipe length and the elevation

The pipe length and refrigerant amount:

Model	Pipe size		Standard length (m)	Max. Elevation B (m)	Max. Length A (m)	Additional refrigerant (g/m)
	Gas	Liquid				
38KHC009DSP 38KHC012DSP 38QHC009ESWP 38QHC012ESWP	3/8''(Φ9.52)	1/4''(Φ6.35)	5	10	25	15
38KHC018DSP 38QHC018DSWP	1/2''(Φ12.7)	1/4''(Φ6.35)	5	20	30	15
38KHC024DSP 38QHC024DSWP	5/8''(Φ15.9)	3/8''(Φ9.52)	5	20	40	30

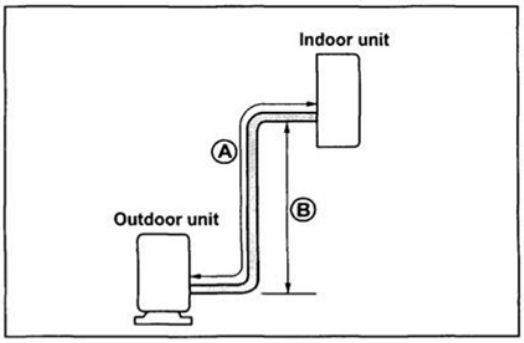

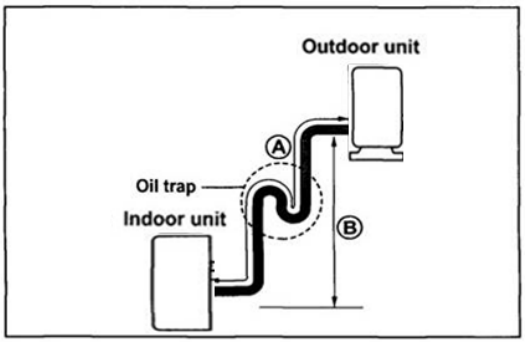

Caution:

The capacity test is based on the standard length and the maximum permissive length is based on the system reliability.

The oil trap should be installed per 5-7 meters.

6.4 Installation for the first time

Air and moisture in the refrigerant system have undesirable effects as below:

- Pressure in the system rises.
- Operating current rises.
- Cooling or heating efficiency drops.
- Moisture in the refrigerant circuit may freeze and block capillary tubing.
- Water may lead to corrosion of parts in the refrigerant system.

Therefore, the indoor units and the pipes between indoor and outdoor units must be leak tested and evacuated to remove gas and moisture from the system.

Gas leak check (Soap water method):

Apply soap water or a liquid neutral detergent on the indoor unit connections or outdoor unit connections by a soft brush to check for leakage of the connecting points of the piping. If bubbles come out, the pipes have leakage.

1. Air purging with vacuum pump

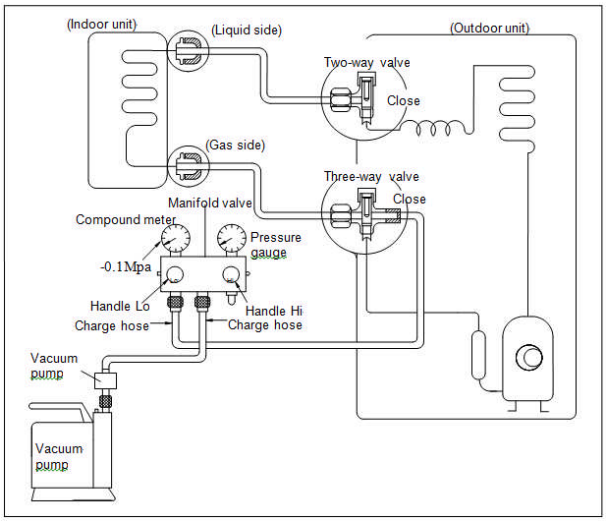

1) Completely tighten the flare nuts of the indoor and outdoor units, confirm that both the 2-way and 3-way valves are set to the closed position.
2) Connect the charge hose with the push pin of handle lo to the 3-way valves gas service port..
3) Connect the charge hose of handle hi connection to the vacuum pump.
4) Fully open the handle Lo of the manifold valve.
5) Operate the vacuum pump to evacuate.
6) Make evacuation for 30 minutes and check whether the compound meter indicates -0.1Mpa. If the meter does not indicate -0.1Mpa after pumping 30 minutes, it should be pumped 20 minutes more. If the pressure can't achieve -0.1Mpa after pumping 50 minutes, please check if there are some leakage points.

Fully close the handle Lo valve of the manifold valve and stop the operation of the vacuum pump. Confirm that the gauge needle does not move (approximately 5 minutes after turning off the vacuum pump).

7) Turn the flare nut of the 3-way valves about 45° counterclockwise for 6 or 7seconds after the gas

coming out, then tighten the flare nut again. Make sure the pressure display in the pressure indicator is a little higher than the atmosphere pressure. Then remove the charge hose from the 3 way valve.

8) Fully open the 2 way valve and 3 way valve and securely tighten the cap of the 3 way valve.

2. Adding the refrigerant if the pipe length >5m

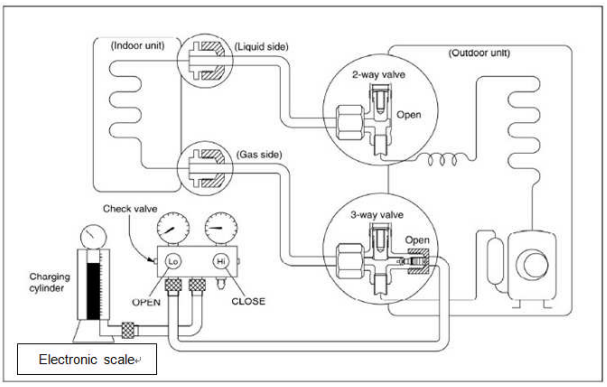

Procedure:

1). Connect the charge hose to the charging cylinder, open the 2-way valve and the 3-way valve.

Connect the charge hose which you

disconnected from the vacuum pump to the valve at the bottom of the cylinder. If the refrigerant is R410A, make the cylinder bottom up to ensure the liquid charge.

2). Purge the air from the charge hose.

Open the valve at the bottom of the cylinder and press the check valve on the charge set to purge the air (be careful of the liquid refrigerant).

3) Put the charging cylinder onto the electronic scale and record the weight.

4) Operate the air conditioner at the cooling mode.

5) Open the valves (Low side) on the charge set and charge the system with liquid refrigerant.

6).When the electronic scale displays the proper weight (refer to the table), disconnect the charge hose from the 3-way valve's service port immediately and turn off the air conditioner before disconnecting the hose.

7). Mount the valve stem caps and the service port

Use torque wrench to tighten the service port cap to a torque of 18N.m.

Be sure to check for gas leakage.

6.5 Adding the refrigerant after running the system for many years

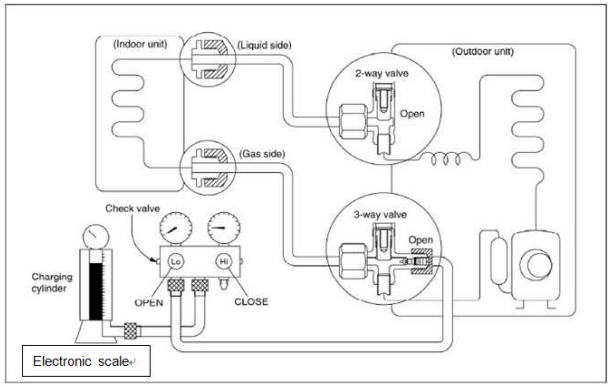

Procedure:

1). Connect the charge hose to the 3-way service port, open the 2-way valve and the 3-way valve.

Connect the charge hose to the valve at the bottom of the cylinder. If the refrigerant is R410A, make the cylinder bottom up to ensure liquid charge.

2). Purge the air from the charge hose.

Open the valve at the bottom of the cylinder and press the check valve on the charge set to purge the air (be careful of the liquid refrigerant).

3) Put the charging cylinder onto the electronic scale and record the weight.

4) Operate the air conditioner at the cooling mode.

5) Open the valves (Low side) on the charge set and charge the system with liquid refrigerant.

6).When the electronic scale displays the proper weight (refer to the gauge and the pressure of the low side), disconnect the charge hose from the 3-way valve's service port immediately and turn off the air conditioner before disconnecting the hose.

7). Mount the valve stem caps and the service port

Use torque wrench to tighten the service port cap to a torque of 18N.m.

Be sure to check for gas leakage.

6.6 Re-installation while the indoor unit need to be repaired

1. Collecting the refrigerant into the outdoor unit

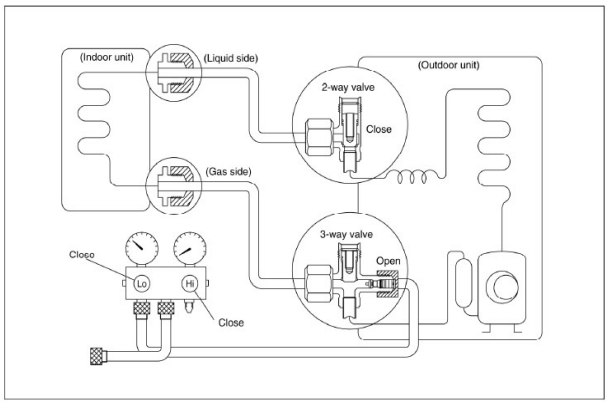

Procedure

1). Confirm that both the 2-way and 3-way valves are set to the opened position

Remove the valve stem caps and confirm that the valve stems are in the opened position.

Be sure to use a hexagonal wrench to operate the valve stems.

2). Connect the charge hose with the push pin of handle lo to the 3-way valves gas service port.

3). Air purging of the charge hose.

Open the handle Lo valve of the manifold valve slightly to purge air from the charge hose for 5 seconds and then close it quickly.

4). Set the 2-way valve to the close position.

5). Operate the air conditioner at the cooling cycle and stop it when the gauge indicates 0.1MPa.

6). Set the 3-way valve to the closed position immediately

Do this quickly so that the gauge ends up indicating 0.3 to 0.5Mpa.

Disconnect the charge set, and tighten the 2-way and 3-way valve's stem nuts.

Use a torque wrench to tighten the 3-way valves service port cap to a torque of 18N.m.

Be sure to check for gas leakage.

6.7 Re-installation while the outdoor unit need to be repaired

1. Evacuation for the whole system

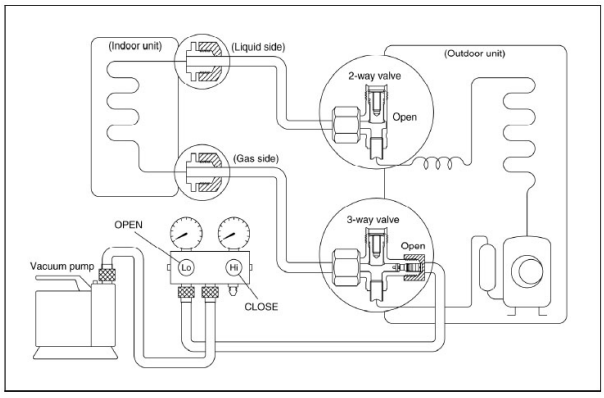

Procedure:

1). Confirm that both the 2-way and 3-way valves are set to the opened position.

2). Connect the vacuum pump to 3-way valve's service port.

3). Evacuation for approximately one hour. Confirm that the compound meter indicates -0.1Mpa.

4). Close the valve (Low side) on the charge set, turn off the vacuum pump, and confirm that the gauge needle does not move (approximately 5 minutes after turning off the vacuum pump).

5). Disconnect the charge hose from the vacuum pump.

2. Refrigerant charging

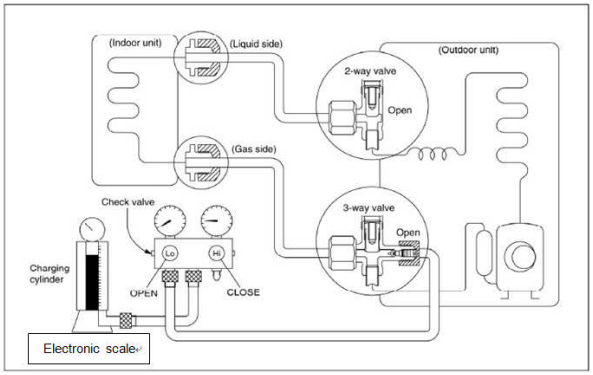

Procedure:

1). Connect the charge hose to the charging cylinder, open the 2-way valve and the 3-way valve

Connect the charge hose which you disconnected from the vacuum pump to the valve at the bottom of the cylinder. If the refrigerant is R410A, make the cylinder bottom up to ensure liquid charge.

2). Purge the air from the charge hose

Open the valve at the bottom of the cylinder and press the check valve on the charge set to purge the air (be careful of the liquid refrigerant).

3) Put the charging cylinder onto the electronic scale and record the weight.

4). Open the valves (Low side) on the charge set and charge the system with liquid refrigerant

If the system cannot be charge with the specified amount of refrigerant, or can be charged with a little at a time (approximately 150g each time) , operating the air conditioner in the cooling cycle; however, one time is not sufficient, wait approximately 1 minute and then repeat the procedure.

5).When the electronic scale displays the proper weight, disconnect the charge hose from the 3-way valve's service port immediately

If the system has been charged with liquid refrigerant while operating the air conditioner, turn off the air conditioner before disconnecting the hose.

6). Mounted the valve stem caps and the service port. Use torque wrench to tighten the service port cap to a torque of 18N.m.

Be sure to check for gas leakage

7. Operation Characteristics

Mode / Temperature	Cooling operation	Heating operation
Room temperature	18℃~32℃	0℃~27℃
Outdoor temperature	-15℃~46℃ (For the models with low temperature cooling system)	-15℃~24℃

CAUTION:

1. If the air conditioner is used beyond the above conditions, certain safety protection features may come into operation and cause the unit to operate abnormally.

2. The room relative humidity should be less than 80%. If the air conditioner operates beyond this figure, the surface of the air conditioner may attract condensation. Please set the vertical air flow louver to its maximum angle (vertically to the floor), and set HIGH fan mode.

3. The optimum performance will be achieved during this operating temperature zone.

8. Electronic function

8.1 Abbreviation

T1: Indoor room temperature

T2: Coil temperature of evaporator

T3: Coil temperature of condenser

T4: Outdoor ambient temperature

T5: Compressor discharge temperature

8.2 Display function

7.2.1 Icon explanation on indoor display board.



Digital display:

Displays the temperature settings when the air conditioner is operational.

Displays the room temperature in FAN mode.

Displays the self-diagnostic codes.

Dispalys ‘ON’ for three seconds when Timer ON, Fresh, Swing, Turbo or Silence feature is activated.

Dispalys ‘OF’ for three seconds when Fresh, Swing, Turbo or Silence feature is cancelled.

Dispalys ‘dF’ under deforsting operation.

Dispalys ‘cF’ when anti-cold air feature is activated under heating mode.

Dispalys ‘SC’ during self clean operation (if aplicable).

Dispalys ‘FP’ under 8℃ heating operation (if aplicable).

When ECO function(optional) is actived,the “88” illuminates gradually one by one as E→C→0→set temperature→E ….

In one second interval.

WIFI function (only for the model with Wi-Fi smart kit)*

NOTE:

A guide on using the infrared remote is not included in this literature package.

8.3 Main Protection

8.3.1 Three minutes delay at restart for compressor

1 minute delay for the 1st time stand-up and 3 minutes delay for others.

8.3.2 Temperature protection of compressor top

The unit will stop working when the compressor top temperature protector cut off, and will restart after the compressor top temperature protector restart.

8.3.3 Temperature protection of compressor discharge

Compressor discharge temperature T5>115℃ for 5s, compressor stops.

8.3.4 Fan speed is out of control

When indoor fan speed keeps too low (300RPM) for certain time, the unit will stop and the LED will display the failure

8.3.5 Inverter module protection

The Inverter module has a protection function about current, voltage and temperature. If these protections happen, the corresponding code will display on indoor unit and the unit will stop working.

8.3.6 Indoor fan delayed open function

When the unit starts up, the louver will be active immediately and the indoor fan will open 7s later.

If the unit runs in heating mode, the indoor fan will be also controlled by anti-cold wind function.

8.3.7 Compressor preheating functions

Preheating permitting condition:

When T4(outdoor ambient temperature)＜3°C, the preheating function will be activated.

8.3.8 Sensor protection at open circuit and breaking disconnection.

When there's only one temperature sensor in malfunction , the air conditioner will keep working but show the error code, in case of any emergency use.

When there's more than one temperature sensor in malfunction, the air conditioner will stop working.

8.3.9 Refrigerant leakage detection

This function is only active in cooling mode. It can better prevent the compressor being damaged by refrigerant leakage or compressor overload.

Open condition:

When compressor is active, the value of the Coil temperature of evaporator T2 has no change or very little change.

8.4 Operation Modes and Functions

8.4.1 Fan mode

(1) Outdoor fan and compressor stop.
(2) Temperature setting function is disabled, and no setting temperature is displayed.
(3) Indoor fan can be set to high/med/low/auto.
(4) The louver operates same as in cooling mode.
(5) Auto fan:

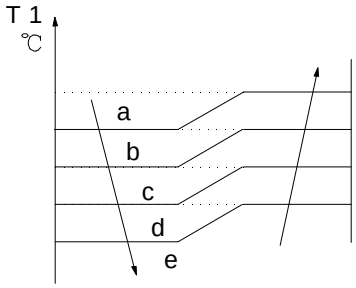

8.4.2 Cooling Mode

8.4.2.1 Compressor running rules

When T1-Ts<ΔT -2℃, the compressor will stop, when T1—Ts >ΔT -0.5℃， the compressor will be activated.
ΔT is the programmed parameter of temperature compensation.
When the AC runs in silence mode, the compressor will run with low frequency.
When the current is more than setting value, the current protection function will be activated, and the compressor will stop.

8.4.2.2 Outdoor fan running rules

The outdoor unit will be run at different fan speed according to T4.
For different outdoor units, the fan speeds are different.

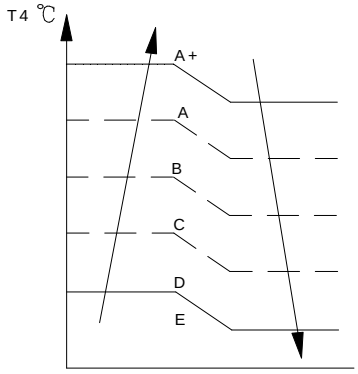

8.4.2.3 Indoor fan running rules

In cooling mode, indoor fan runs all the time and the speed can be selected as high, medium, low and auto.
The indoor fan is controlled as below:

Setting fan speed	T1-Td ℃(°F)		Actual fan speed
H		A	H+(H+=H+G)
			H (=H)
		B	
		C	H-(H-=H-G)
M		D	M+(M+=M+Z)
			M(M=M)
		E	
		F	M-(M-=M-Z)
L		G	L+(L+=L+D)
			L(L=L)
		H	
		I	L-(L-=L-D)

The auto fan acts as below rules:

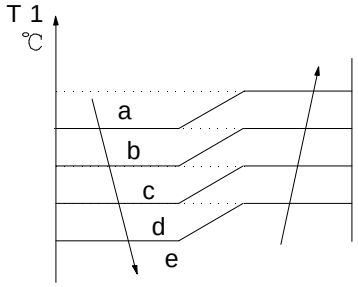

8.4.2.4 Condenser temperature protection

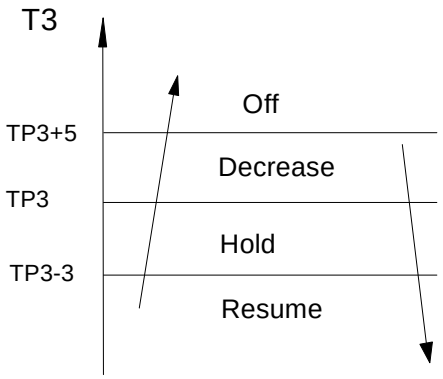

---TP3<T3< TP3+5, the compressor frequency will decrease to the lower level until to F1 and then runs at F1.If TP3-3<T3< TP3, the compressor will keep running at the current frequency.

---T3< TP3-3, the compressor will not limit the frequency and resume to the former frequency.

---T3> TP3+5 for 5 seconds, the compressor will stop until T3< TP3-3.

8.4.2.5 Evaporator temperature protection

When the evaporator temperature is less than setting value, the compressor will stop.

8.4.3 Heating Mode

8.4.3.1 Compressor running rules

When T1-Ts>-ΔT, the compressor will stop, when T1-T_S<ΔT-1.5，the compressor will be on. ΔT is the programmed parameter of temperature compensation.

When the AC runs in silence mode, the compressor will run with low frequency.

When the current is more than setting value, the current protection function will be activated and the compressor will stop.

8.4.3.2 Outdoor fan running rules

The outdoor unit will be run at different fan speed according to T4.

For different outdoor units, the fan speeds are different.

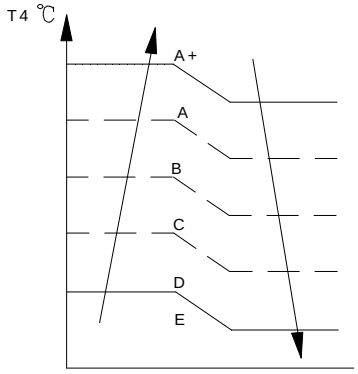

8.4.3.3 Indoor fan running rules

When the compressor is on, the indoor fan can be set to high/med/low/auto. And the anti-cold wind function has the priority.

The indoor fan is controlled as below:

Setting fan speed	T1-Td ℃(°F)	Actual fan speed
H	A	H+(H+=H+G)
		H (=H)
	B C	H- (H-=H-G)
M	D	M+(M+=M+Z)
		M(M=M)
	E F	M-(M-=M-Z)
L	G	L+(L+=L+D)
		L(L=L)
	H I	L-(L-=L-D)

Auto fan action in heating mode:

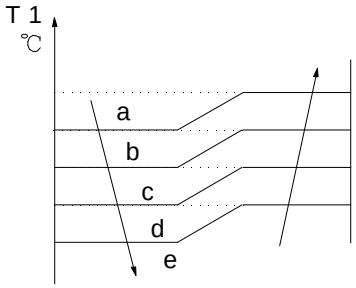

8.4.3.4 Defrosting mode

AC will enter the defrosting mode according to the value of temp. of T3 and the value range of temp. change of T3 and also the compressor running time.

During the defrosting mode, the compressor keep running, indoor and outdoor motor will stop, defrost lamp of the indoor unit will be lighted

"dF" will be displayed.

If any one of the following items is satisfied, the defrosting will finish and the machine will turn to

normal heating mode.
----T3 rises to be higher than TCDE1℃.
----T3 keeps to be higher than TCDE2℃ for 80 seconds.
----The machine has run for 15 minutes in defrosting mode.

8.4.3.5 Evaporator coil temperature protection

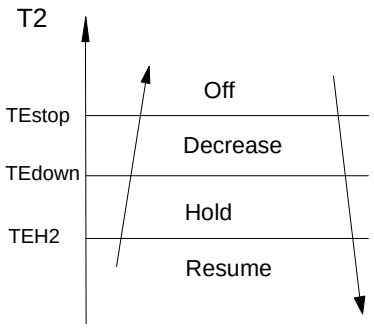

Off: Compressor stops.
Decrease: Decrease the running frequency to the lower level.
Hold: Keep the current frequency.
Resume: No limitation for frequency.

8.4.4 Auto-mode

This mode can be chosen with remote controller and the setting temperature can be changed between 17°C~30°C
In auto mode, the machine will choose cooling, heating or fan-only mode according to ΔT (ΔT =T1-Ts).

ΔT=T1-Ts	Running mode
ΔT＞2℃	Cooling
-2≤ΔT≤2℃	Fan-only
ΔT<-2℃	Heating

Indoor fan will run at auto fan of the relevant mode.
The louver operates same as in relevant mode.
If the machine switches mode between heating and cooling, the compressor will keep stopping for 15 minutes and then choose mode according to T1-Ts.
If the setting temperature is modified, the machine will choose running function again.

8.4.5 Drying mode

Indoor fan speed is fixed at breeze and can't be changed. The louver angle is the same as in cooling mode.
All protections are active and the same as that in cooling mode.

8.4.6 Forced operation function

Forced cooling mode:
The compressor and outdoor fan keep running and the indoor fan runs at low speed. After running for 30 minutes, AC will turn to auto mode with 24℃ setting temperature.
Forced auto mode:
The action of forced auto mode is the same as normal auto mode with 24℃ setting temperature.
When AC receives signals, such as switch on, switch off, timer on, timer off, mode setting, fan speed setting, sleeping mode setting, follow me setting, it will quit the forced operation.

8.4.7 Timer function

8.4.7.1 Timing range is 24 hours.
8.4.7.2 Timer on. The machine will turn on automatically when reaching the setting time.
8.4.7.3 Timer off. The machine will turn off automatically when reaching the setting time.
8.4.7.4 Timer on/off. The machine will turn on automatically when reaching the setting "on" time, and then turn off automatically when reaching the setting "off" time.
8.4.7.5 Timer off/on. The machine will turn off automatically when reaching the setting "off" time, and then turn on automatically when reaching the setting "on" time.
8.4.7.6 The timer function will not change the AC current operation mode. Suppose AC is off now, it will not start up firstly after setting the "timer off" function. And when reaching the setting time, the timer LED will be off and the AC running mode has not been changed.
8.4.7.7 The setting time is relative time.

8.4.7.8 The AC will quit the timer function when it has malfunction.

8.4.8 Economy function

8.4.8.1 The sleep function is available in cooling, heating or auto mode.

8.4.8.2. Operation process in sleep mode is as follow:

When cooling, the setting temperature rises 1℃ (be lower than 30℃) every one hour, 2 hours later the setting temperature stops rising and the indoor fan is fixed at low speed.

When heating, the setting temperature decreases 1℃ (be higher than 17℃) every one hour, 2 hours later the setting temperature stops rising and indoor fan is fixed at low speed. (Anti-cold wind function has the priority).

8.4.8.3 Operation time in sleep mode is 7 hours. After 7 hours the AC quits this mode and turns off.

8.4.8.4 Timer setting is available

8.4.9 Auto-Restart function

The indoor unit is equipped with auto-restart function, which is carried out through an auto-restart module. In case of a sudden power failure, the module memorizes the setting conditions before the power failure. The unit will resume the previous operation setting (not including swing function) automatically after 3 minutes when power returns.

If the memorization condition is forced cooling mode, the unit will run in cooling mode for 30 minutes and turn to auto mode as 24℃ setting temp.

If AC is off before power off and AC is required to start up now, the compressor will have 1 minute delay when power on. Other conditions, the compressor will have 3 minutes delay when restarts.

8.4.10 Refrigerant Leakage Detection

With this new technology, the display area will show “EC” when the outdoor unit detects refrigerant leakage.

8.4.11 Louver Position Memory Function

When starting the unit again after shutting down, its louver will restore to the angle originally set by the user, but the precondition is that the angle must be within the allowable range, if it exceeds, it will memorize the maximum angle of the louver. During operation, if the power fails or the end user shuts down the unit in the turbo mode, the louver will restore to the default angle.

8.4.12 8℃ Heating(For heat pump models)

In heating operation, the preset temperature of the air conditioner can be as lower as 8℃, which keeps the room temperature steady at 8℃ and prevents household things freezing when the house is unoccupied for a long time in severe cold weather.

8.4.13 Self- clean

For heat pump models which are provided with this function, after running in cooling or drying mode, if the user press “Self Clean” button on remote controller, firstly, indoor unit runs in fan only mode for a while, then low heat operation and finally runs in fan only again. This function can keep the inside of indoor unit dry and prevent breeding of mold.

8.4.14 Follow me

1) If the indoor PCB receives the signal which results from pressing the FOLLOW ME button on remote controller, the buzzer will emit a sound and this indicates the follow me function is initiated. But when the indoor PCB receives signal which sent from remote controller every 3 minutes, the buzzer will not respond. When the unit is running with follow me function, the PCB will control the unit according to the temperature from follow me signal, and the temperature collection function of room temperature sensor will be shielded, but the error detective function of room temperature

sensor will be still valid.

2) When the follow me function is available, the PCB will control the unit according to the room temperature from the remote controller and the setting temperature.

3) The PCB will take action to the mode change information from remote controller signal, but it will not affected by the setting temperature.

4) When the unit is running with follow me function, if the PCB doesn't receive any signal from remote controller for 7 minutes or pressing FOLLOW ME button again, the follow me function will be turned off automatically, and the temperature will control the unit according to the room temperature detected from its own room temperature sensor and setting temperature.

8.4.15 Silence operation

Press the "silence" button on remote controller to initiate SILENCE function. When the Silence function is activated, the compressor running frequency will keep lower than F2 and the indoor unit will bring faint breeze, which will reduce the noise to the lowest level and create a quiet and comfortable room for you.

8.4.16 Point check function

Press the LED or silence button of the remote controller three times, and then press the AIR DIRECTION or SWING button three times in ten seconds, the buzzer will keep ring for two seconds. The air conditioner will enter into the information enquiry status. You can press the LED DISPLAY or AIR DIRECTION button to check the next or front item's information.

When the AC enter the "information enquiry" status, it will display the code name in 2 seconds, the details are as follows.

Enquiry information	Displaying code	Meaning
T1	T1	T1 temp.
T2	T2	T2 temp.
T3	T3	T3 temp.
T4	T4	T4 temp.
T2B	Tb	T2B temp.
TP	TP	TP temp.
TH	TH	TH temp.
Targeted Frequency	FT	Targeted Frequency
Actual Frequency	Fr	Actual Frequency
Indoor fan speed	IF	Indoor fan speed
Outdoor fan speed	OF	Outdoor fan speed
EXV opening angle	LA	EXV opening angle
Compressor continuous running time	CT	Compressor continuous running time
Causes of compressor stop.	ST	Causes of compressor stop.
Reserve	A0	
Reserve	A1	
Reserve	b0	
Reserve	b1	
Reserve	b2	
Reserve	b3	
Reserve	b4	
Reserve	b5	
Reserve	b6	
Reserve	dL	
Reserve	Ac	
Reserve	Uo	
Reserve	Td	

When the AC enter into the information enquiry status, it will display the code value in the next 25s, the details are as follows.

Enquiry information	Display value	Meaning	Remark
T1,T2,T3,T4, T2B,TP,TH, Targeted Frequency, Actual Frequency	-1F,-1E,-1d,-1c,-1b,-1A	-25,-24,-23,-22,-21,-20	1. All the displaying temperature is actual value. 2. All the temperature is °C no matter what kind of remote controller is used. 3. T1,T2,T3,T4,T2B display range:-25~70, TP display range:-20~130. 4. Frequency display range: 0~159HZ. 5. If the actual value exceeds the range, it will display the maximum value or minimum value.
	-19—99	-19—99	
	A0,A1,…A9	100,101,…109	
	b0,b1,…b9	110,111,…119	
	c0,c1,…c9	120,121,…129	
	d0,d1,…d9	130,131,…139	
	E0,E1,…E9	140,141,…149	
	F0,F1,…F9	150,151,…159	
Indoor fan speed /Outdoor fan speed	0	OFF	
	1,2,3,4	Low speed, Medium speed, High speed, Turbo	For some big capacity motors.
	14-FF	Actual fan speed=Display value turns to decimal value and then multiply 10. The unit is RPM.	For some small capacity motors, display value is from 14-FF(hexadecimal), the corresponding fan speed range is from 200-2550RPM.
EXV opening angle	0-FF	Actual EXV opening value=Display value turns to decimal value and then multiply 2.	
Compressor continuous running time	0-FF	0-255 minutes	If the actual value exceeds the range, it will display the maximum value or minimum value.
Causes of compressor stop.	0-99	For the detailed meaning, please consult with engineer	Decimal display
Reserve	0-FF		

9. Troubleshooting

Safety

Electricity power is still kept in capacitors even the power supply is shut off. Do not forget to discharge the electricity power in capacitor.

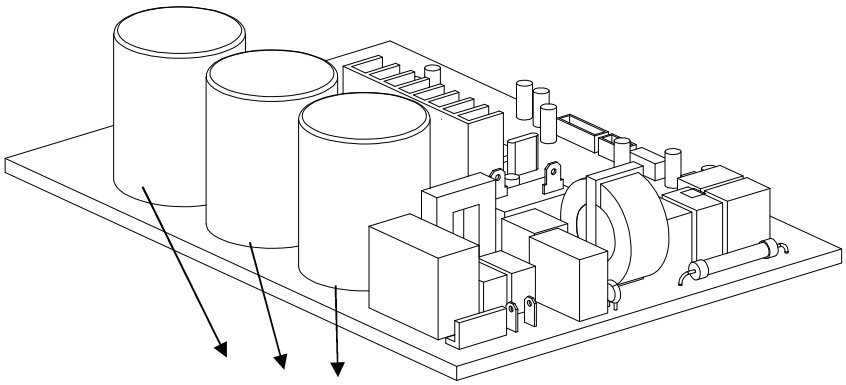

Electrolytic Capacitors
(HIGH VOLTAGE! CAUTION!)

For other models, please connect discharge resistance (approx.100Ω 40W) or soldering iron (plug) between +, - terminals of the electrolytic capacitor on the contrary side of the outdoor PCB.

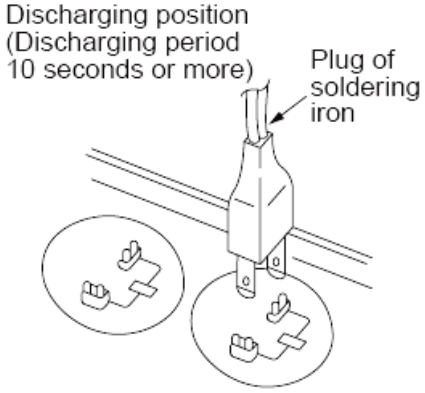

Note: The picture above is only for reference. The plug of your side may be different.

9.1 Indoor Unit Error Display

Operation lamp	Timer lamp	Display	LED STATUS
☆ 1 time	X	E0	Indoor unit EEPROM parameter error
☆ 2 times	X	E1	Indoor / outdoor units communication error
☆ 4 times	X	E3	Indoor fan speed has been out of control
☆ 5 times	X	E4	Indoor room temperature sensor T1 open circuit or short circuit
☆ 6 times	X	E5	Evaporator coil temperature sensor T2 open circuit or short circuit
☆ 7 times	X	EC	Refrigerant leakage detection
☆ 2 times	O	F1	Outdoor ambient temperature sensor T4 open circuit or short circuit
☆ 3 times	O	F2	Condenser coil temperature sensor T3 open circuit or short circuit
☆ 4 times	O	F3	Compressor discharge temperature sensor T5 open circuit or short circuit
☆ 5 times	O	F4	Outdoor unit EEPROM parameter error
☆ 6 times	O	F5	Outdoor fan speed has been out of control
☆ 1 times	☆	P0	IPM malfunction or IGBT over-strong current protection
☆ 2 times	☆	P1	Over voltage or over low voltage protection
☆ 3 times	☆	P2	High temperature protection of compressor top diagnosis and solution
☆ 5 times	☆	P4	Inverter compressor drive error

O（light） X（off） ☆（flash）

9.2 Trouble shooting

9.2.1 EEPROM parameter error diagnosis and solution(E0/F4)

Error Code	**E0/F4**
Malfunction decision conditions	**Indoor or outdoor PCB main chip does not receive feedback from EEPROM chip.**
Supposed causes	● **Installation mistake** ● **PCB faulty**

Trouble shooting:

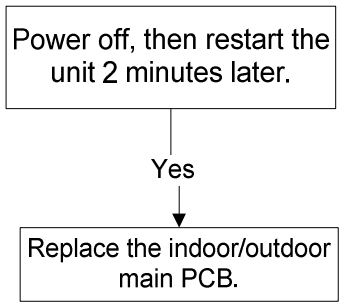

EEPROM: a read-only memory whose contents can be erased and reprogrammed using a pulsed voltage. For the location of EEPROM chip, please refer to the below photos.

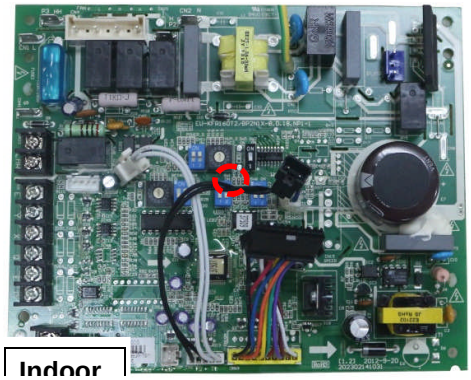

Indoor

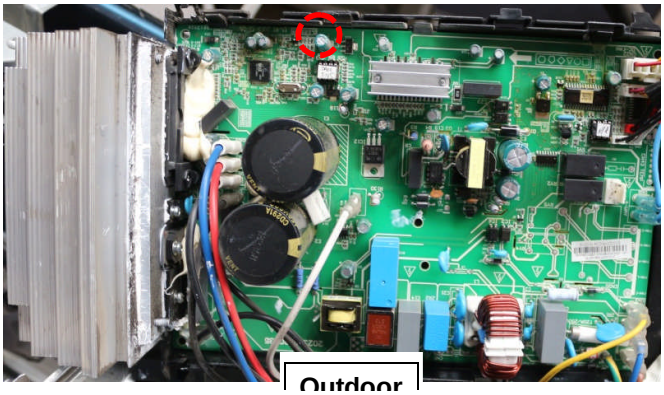

Outdoor

Note: The two photos above are only for reference, it's may be not same totally with the ones on your side.

9.2.2 Indoor / outdoor unit's communication diagnosis and solution(E1)

Error Code	E1
Malfunction decision conditions	Indoor unit does not receive the feedback from outdoor unit during 110 seconds and this condition happens four times continuously.
Supposed causes	• Wiring mistake • Indoor or outdoor PCB faulty

Trouble shooting:

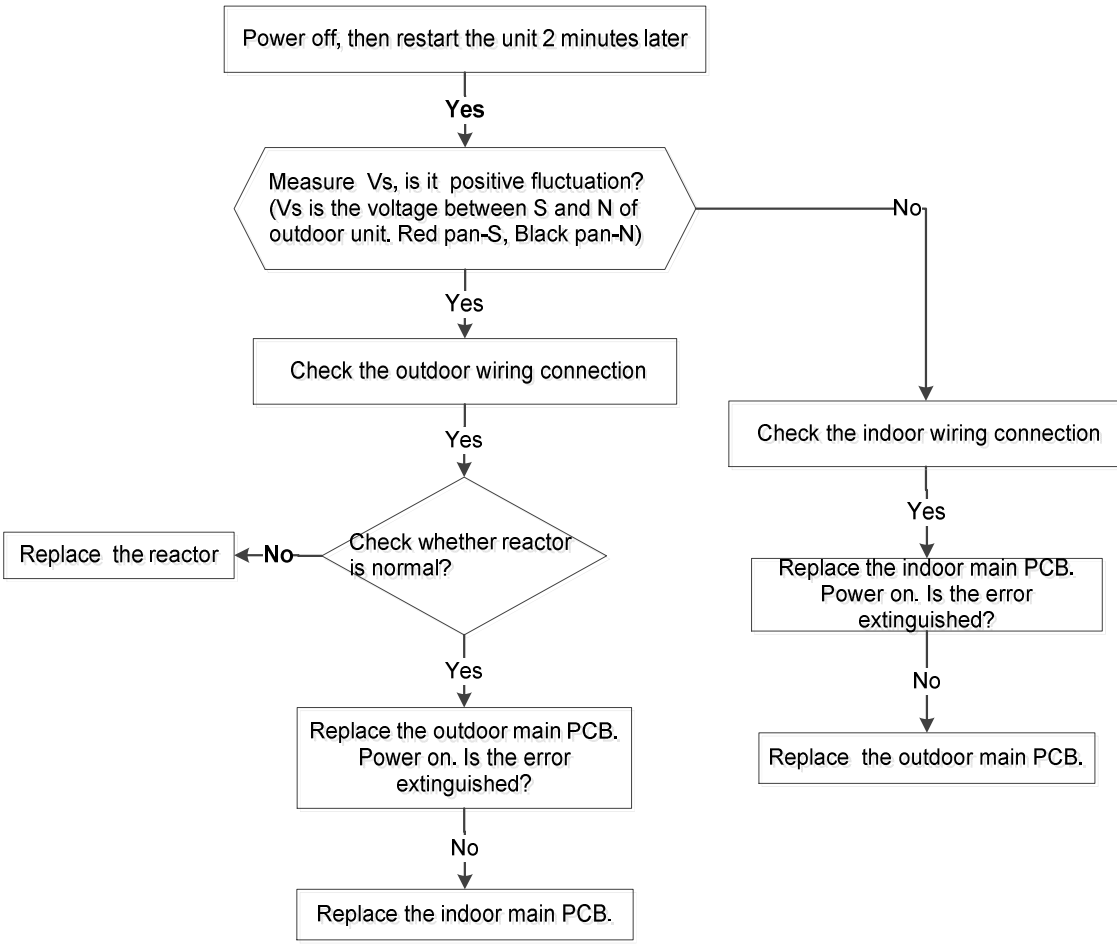



Remark:
Use a multi meter to test the resistance of the reactor which does not connect with capacitor.

9.2.3 Fan speed has been out of control diagnosis and solution(E3)

Error Code	E3
Malfunction decision conditions	When indoor fan speed keeps too low (300RPM) for certain time, the unit will stop and the LED will display the failure.
Supposed causes	• Wiring mistake • Fan ass'y faulty • Fan motor faulty • PCB faulty

Trouble shooting:

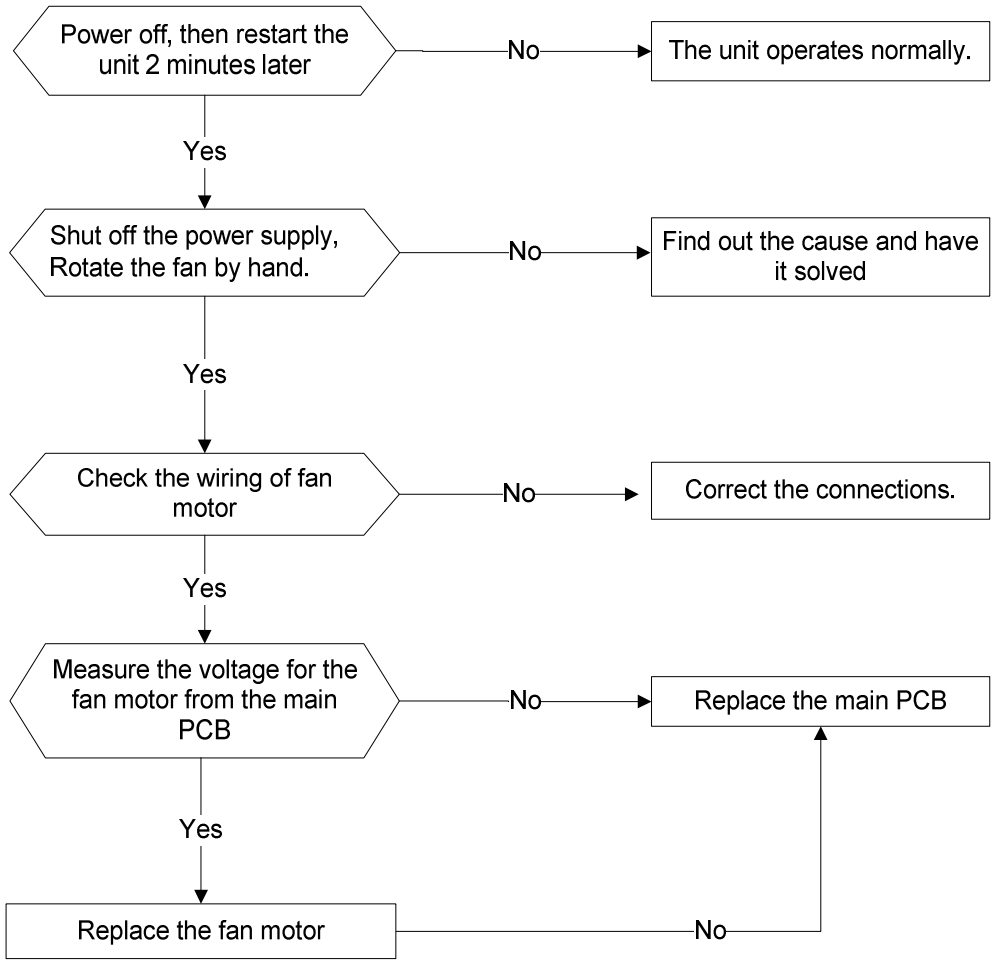

Index1:

1:Indoor or Outdoor DC Fan Motor(control chip is in fan motor)

Power on and when the unit is in standby, measure the voltage of pin1-pin3, pin4-pin3 in fan motor connector. If the value of the voltage is not in the range showing in below table, the PCB must has problems and need to be replaced.

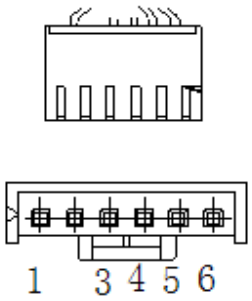

DC motor voltage input and output

NO.	Color	Signal	Voltage
1	Red	Vs/Vm	280V~380V
2	---	---	---
3	Black	GND	0V
4	White	Vcc	14-17.5V
5	Yellow	Vsp	0~5.6V
6	Blue	FG	14-17.5V

2. Outdoor DC Fan Motor (control chip is in outdoor PCB)

Power on ,and check if the fan can run normally, if the fan can run normally, the PCB must has problems and need to be replaced, If the fan can't run normally, measure the resistance of each two pins. If the resistance is not equal to each other, the fan motor must have problems and need to be replaced, otherwise the PCB must has problems and need to be replaced.

3. Indoor AC Fan Motor

Power on and set the unit running in fan mode at high fan speed. After running for 15 seconds, measure the voltage of pin1 and pin2. If the value of the voltage is less than 100V(208~240V power supply)or 50V(115V power supply), the PCB must has problems and need to be replaced.

9.2.4 Refrigerant Leakage Detection diagnosis and solution(EC)

Error Code	**EC**
Malfunction decision conditions	**Define the evaporator coil temp.T2 of the compressor just starts running as Tcool.** **In the beginning 5 minutes after the compressor starts up, if T2 ＜Tcool－2℃ does not keep continuous 4 seconds and this situation happens 3 times, the display area will show "EC" and AC will turn off.**
Supposed causes	● **T2 sensor faulty** ● **Indoor PCB faulty** ● **System problems, such as leakage or blocking.**

Trouble shooting:

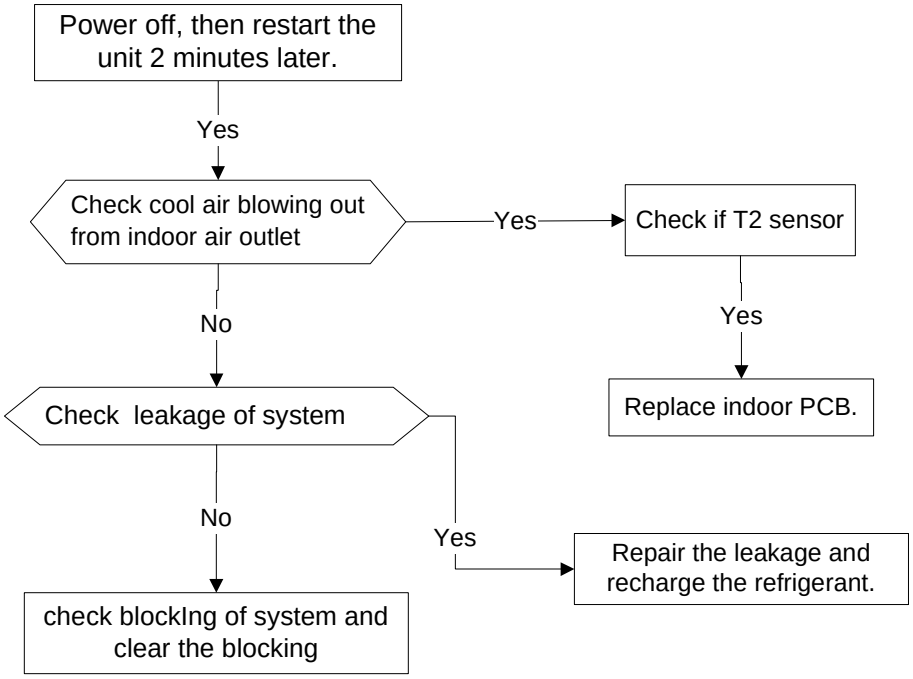

9.2.5 Open circuit or short circuit of temperature sensor diagnosis and solution(E5)

Error Code	**E4/E5/F1/F2/F3**
Malfunction decision conditions	**If the sampling voltage is lower than 0.06V or higher than 4.94V, the LED will display the failure.**
Supposed causes	• **Wiring mistake** • **Sensor faulty**

Trouble shooting:

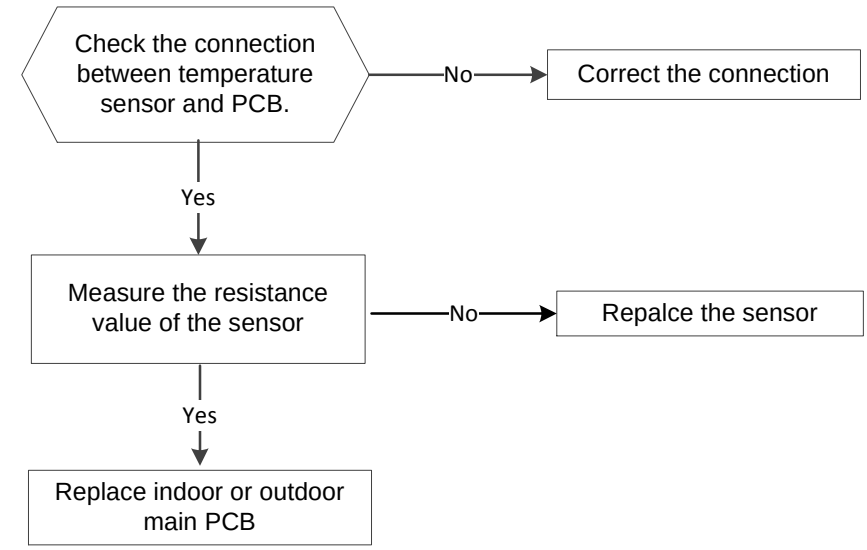

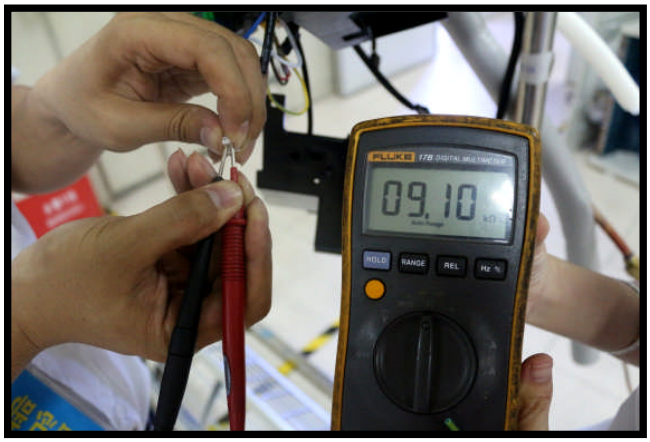

9.2.6 IPM malfunction or IGBT over-strong current protection diagnosis and solution(P0)

Error Code	P0
Malfunction decision conditions	When the voltage signal that IPM send to compressor drive chip is abnormal, the display LED will show “P0” and AC will turn off.
Supposed causes	• Wiring mistake • IPM malfunction • Outdoor fan ass’y faulty • Compressor malfunction • Outdoor PCB faulty

Trouble shooting:

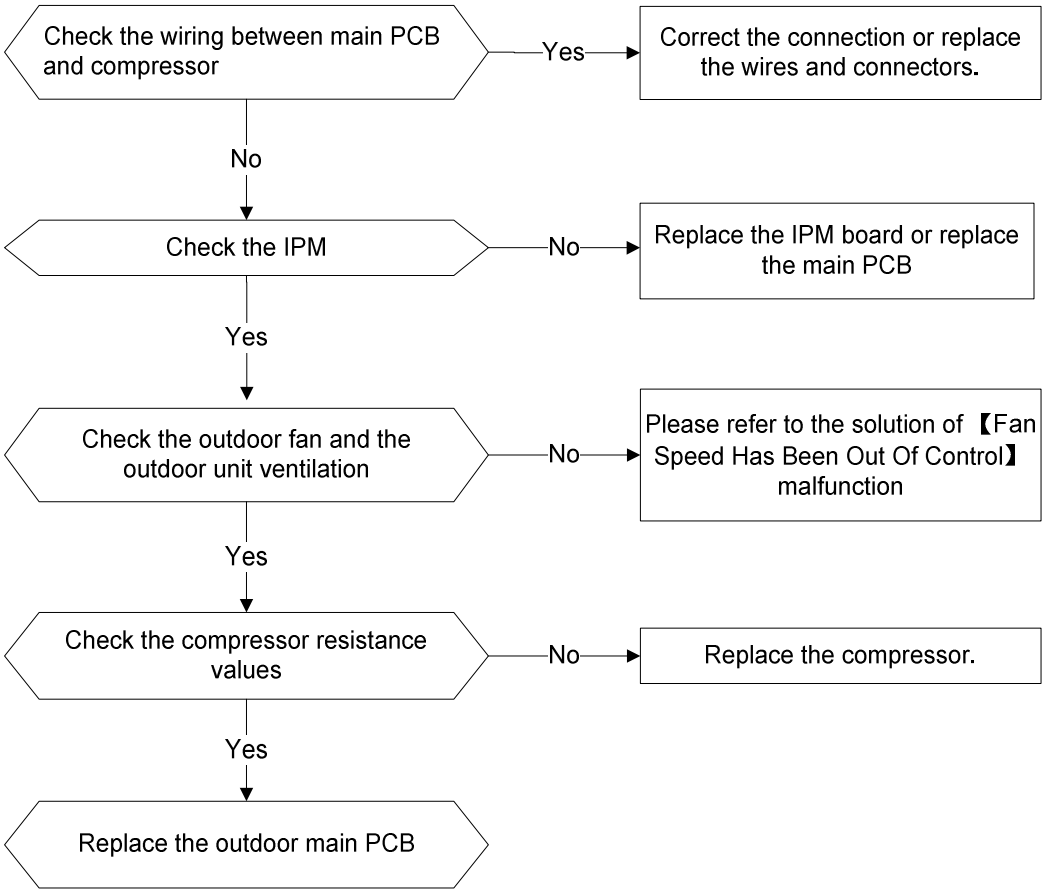

➢ **IPM continuity check**

Turn off the power, let the large capacity electrolytic capacitors discharge completely, and dismount the IPM. Use a digital tester to measure the resistance between P and UVWN; UVW and N.

Digital tester		Normal resistance value	Digital tester		Normal resistance value
(+)Red	(-)Black		(+)Red	(-)Black	
P	N	∞ (Several MΩ)	U	N	∞ (Several MΩ)
	U		V		
	V		W		
	W		(+)Red		

9.2.7 Over voltage or too low voltage protection diagnosis and solution(P1)

Error Code	**P1**
Malfunction decision conditions	**An abnormal voltage rise or drop is detected by checking the specified voltage detection circuit.**
Supposed causes	● **Power supply problems.** ● **System leakage or block** ● **PCB faulty**

Trouble shooting:

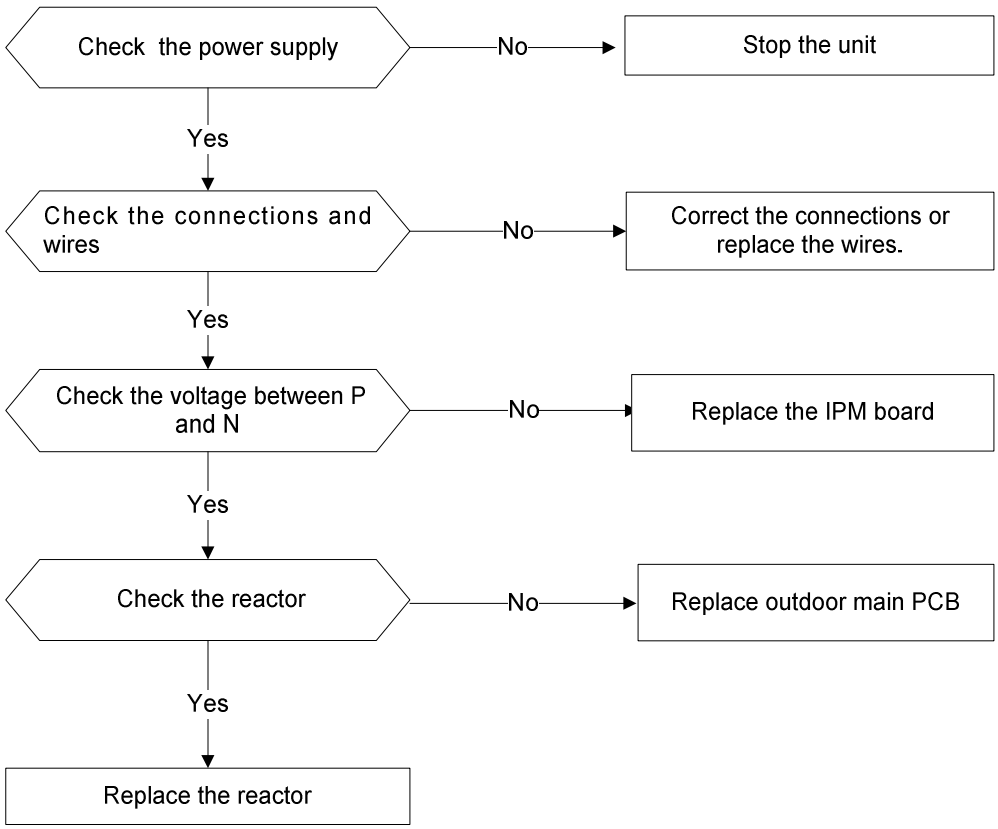

9.2.8 High temperature protection of compressor top diagnosis and solution(P2)

Error Code	**P2**
Malfunction decision conditions	**If the sampling voltage is not 5V, the LED will display the failure.**
Supposed causes	● **Power supply problems.** ● **System leakage or block** ● **PCB faulty**

Trouble shooting:

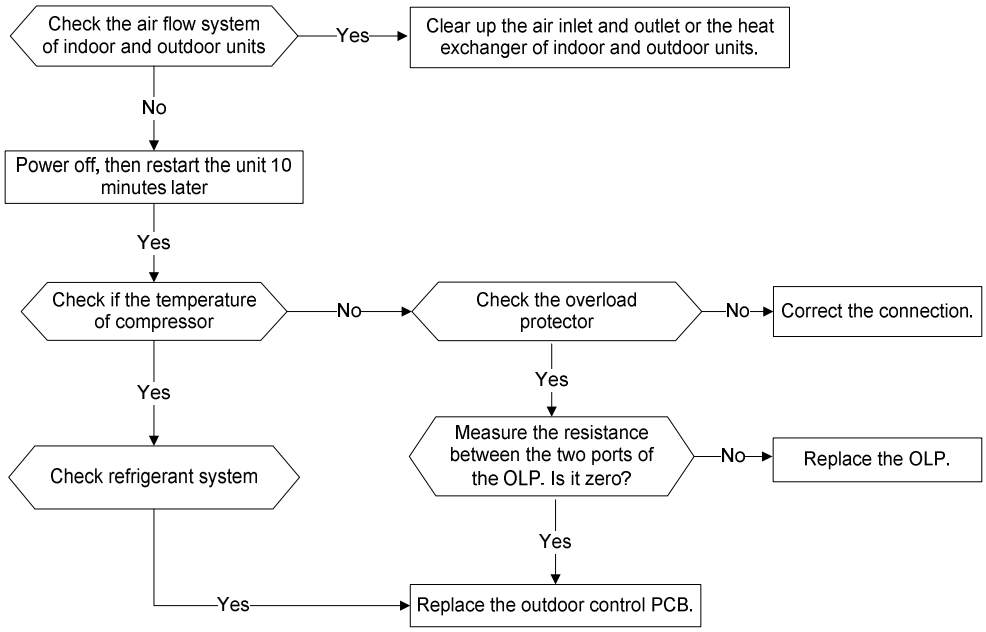

9.2.9 Inverter compressor drive error diagnosis and solution(P4)

Error Code	P4
Malfunction decision conditions	An abnormal inverter compressor drive is detected by a special detection circuit, including communication signal detection, voltage detection, compressor rotation speed signal detection and so on.
Supposed causes	● Wiring mistake ● IPM malfunction ● Outdoor fan ass'y faulty ● Compressor malfunction ● Outdoor PCB faulty

Trouble shooting:

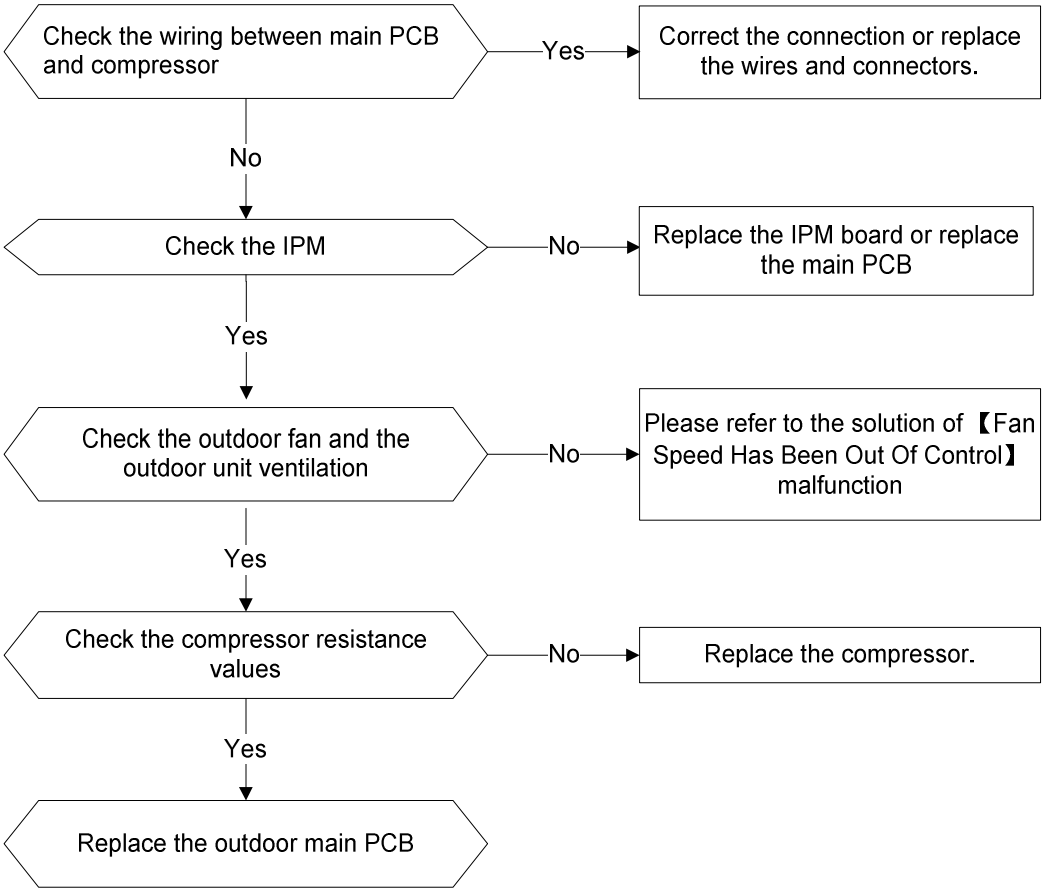

Main parts check

1. Temperature sensor checking

Disconnect the temperature sensor from PCB, measure the resistance value with a tester.

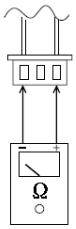

Tester

Temperature Sensors.

Room temp.(T1) sensor,

Indoor coil temp.(T2) sensor,

Outdoor coil temp.(T3) sensor,

Outdoor ambient temp.(T4) sensor,

Compressor discharge temp.(T5) sensor.

Measure the resistance value of each winding by using the multi-meter.

Appendix 1 Temperature Sensor Resistance Value Table for T1,T2,T3,T4 (°C--K)

°C	°F	**K Ohm**	°C	°F	**K Ohm**	°C	°F	**K Ohm**	°C	°F	**K Ohm**
-20	-4	115.266	20	68	12.6431	60	140	2.35774	100	212	0.62973
-19	-2	108.146	21	70	12.0561	61	142	2.27249	101	214	0.61148
-18	0	101.517	22	72	11.5	62	144	2.19073	102	216	0.59386
-17	1	96.3423	23	73	10.9731	63	145	2.11241	103	217	0.57683
-16	3	89.5865	24	75	10.4736	64	147	2.03732	104	219	0.56038
-15	5	84.219	25	77	10	65	149	1.96532	105	221	0.54448
-14	7	79.311	26	79	9.55074	66	151	1.89627	106	223	0.52912
-13	9	74.536	27	81	9.12445	67	153	1.83003	107	225	0.51426
-12	10	70.1698	28	82	8.71983	68	154	1.76647	108	226	0.49989
-11	12	66.0898	29	84	8.33566	69	156	1.70547	109	228	0.486
-10	14	62.2756	30	86	7.97078	70	158	1.64691	110	230	0.47256
-9	16	58.7079	31	88	7.62411	71	160	1.59068	111	232	0.45957
-8	18	56.3694	32	90	7.29464	72	162	1.53668	112	234	0.44699
-7	19	52.2438	33	91	6.98142	73	163	1.48481	113	235	0.43482
-6	21	49.3161	34	93	6.68355	74	165	1.43498	114	237	0.42304
-5	23	46.5725	35	95	6.40021	75	167	1.38703	115	239	0.41164
-4	25	44	36	97	6.13059	76	169	1.34105	116	241	0.4006
-3	27	41.5878	37	99	5.87359	77	171	1.29078	117	243	0.38991
-2	28	39.8239	38	100	5.62961	78	172	1.25423	118	244	0.37956
-1	30	37.1988	39	102	5.39689	79	174	1.2133	119	246	0.36954
0	32	35.2024	40	104	5.17519	80	176	1.17393	120	248	0.35982
1	34	33.3269	41	106	4.96392	81	178	1.13604	121	250	0.35042
2	36	31.5635	42	108	4.76253	82	180	1.09958	122	252	0.3413
3	37	29.9058	43	109	4.5705	83	181	1.06448	123	253	0.33246
4	39	28.3459	44	111	4.38736	84	183	1.03069	124	255	0.3239
5	41	26.8778	45	113	4.21263	85	185	0.99815	125	257	0.31559
6	43	25.4954	46	115	4.04589	86	187	0.96681	126	259	0.30754
7	45	24.1932	47	117	3.88673	87	189	0.93662	127	261	0.29974
8	46	22.5662	48	118	3.73476	88	190	0.90753	128	262	0.29216
9	48	21.8094	49	120	3.58962	89	192	0.8795	129	264	0.28482
10	50	20.7184	50	122	3.45097	90	194	0.85248	130	266	0.2777
11	52	19.6891	51	124	3.31847	91	196	0.82643	131	268	0.27078
12	54	18.7177	52	126	3.19183	92	198	0.80132	132	270	0.26408
13	55	17.8005	53	127	3.07075	93	199	0.77709	133	271	0.25757
14	57	16.9341	54	129	2.95896	94	201	0.75373	134	273	0.25125
15	59	16.1156	55	131	2.84421	95	203	0.73119	135	275	0.24512
16	61	15.3418	56	133	2.73823	96	205	0.70944	136	277	0.23916
17	63	14.6181	57	135	2.63682	97	207	0.68844	137	279	0.23338
18	64	13.918	58	136	2.53973	98	208	0.66818	138	280	0.22776
19	66	13.2631	59	138	2.44677	99	210	0.64862	139	282	0.22231

A**ppendix 2** Temperature Sensor Resistance Value Table for T5 (°C --K)

°C	°F	**K Ohm**	°C	°F	**K Ohm**	°C	°F	**K Ohm**	°C	°F	**K Ohm**
-20	-4	542.7	20	68	68.66	60	140	13.59	100	212	3.702
-19	-2	511.9	21	70	65.62	61	142	13.11	101	214	3.595
-18	0	483	22	72	62.73	62	144	12.65	102	216	3.492
-17	1	455.9	23	73	59.98	63	145	12.21	103	217	3.392
-16	3	430.5	24	75	57.37	64	147	11.79	104	219	3.296
-15	5	406.7	25	77	54.89	65	149	11.38	105	221	3.203
-14	7	384.3	26	79	52.53	66	151	10.99	106	223	3.113
-13	9	363.3	27	81	50.28	67	153	10.61	107	225	3.025
-12	10	343.6	28	82	48.14	68	154	10.25	108	226	2.941
-11	12	325.1	29	84	46.11	69	156	9.902	109	228	2.86
-10	14	307.7	30	86	44.17	70	158	9.569	110	230	2.781
-9	16	291.3	31	88	42.33	71	160	9.248	111	232	2.704
-8	18	275.9	32	90	40.57	72	162	8.94	112	234	2.63
-7	19	261.4	33	91	38.89	73	163	8.643	113	235	2.559
-6	21	247.8	34	93	37.3	74	165	8.358	114	237	2.489
-5	23	234.9	35	95	35.78	75	167	8.084	115	239	2.422
-4	25	222.8	36	97	34.32	76	169	7.82	116	241	2.357
-3	27	211.4	37	99	32.94	77	171	7.566	117	243	2.294
-2	28	200.7	38	100	31.62	78	172	7.321	118	244	2.233
-1	30	190.5	39	102	30.36	79	174	7.086	119	246	2.174
0	32	180.9	40	104	29.15	80	176	6.859	120	248	2.117
1	34	171.9	41	106	28	81	178	6.641	121	250	2.061
2	36	163.3	42	108	26.9	82	180	6.43	122	252	2.007
3	37	155.2	43	109	25.86	83	181	6.228	123	253	1.955
4	39	147.6	44	111	24.85	84	183	6.033	124	255	1.905
5	41	140.4	45	113	23.89	85	185	5.844	125	257	1.856
6	43	133.5	46	115	22.89	86	187	5.663	126	259	1.808
7	45	127.1	47	117	22.1	87	189	5.488	127	261	1.762
8	46	121	48	118	21.26	88	190	5.32	128	262	1.717
9	48	115.2	49	120	20.46	89	192	5.157	129	264	1.674
10	50	109.8	50	122	19.69	90	194	5	130	266	1.632
11	52	104.6	51	124	18.96	91	196	4.849			
12	54	99.69	52	126	18.26	92	198	4.703			
13	55	95.05	53	127	17.58	93	199	4.562			
14	57	90.66	54	129	16.94	94	201	4.426			
15	59	86.49	55	131	16.32	95	203	4.294			
16	61	82.54	56	133	15.73	96	205	4.167			
17	63	78.79	57	135	15.16	97	207	4.045			
18	64	75.24	58	136	14.62	98	208	3.927			
19	66	71.86	59	138	14.09	99	210	3.812			

2. Compressor checking

Measure the resistance value of each winding by using the tester.

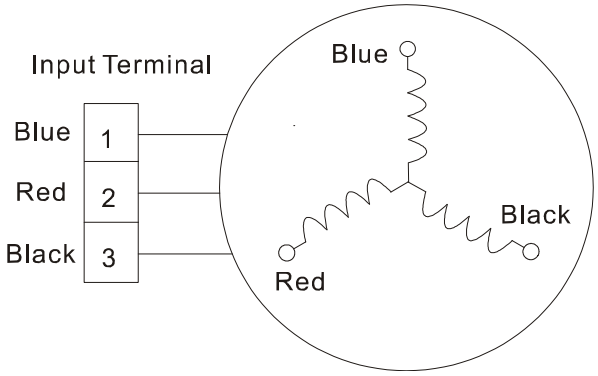

Position	Resistance Value			
Model	38KHC009DSP	38KHC012DSP 38QHC009ESWP 38QHC012ESWP	38KHC018DSP 38QHC018DSWP	38KHC024DSP 38QHC024DSWP
Compressor Model	ASK89D53UEZ	ASN98D22UFZ	ASM135D23UFZ	ATM150D23UFZ
Blue - Red	2.35Ω (20℃/68℉)	1.57Ω (20℃/68℉)	1.72Ω (20℃/68℉)	1.72Ω (20℃/68℉)
Blue - Black				
Red - Blue				