25HNB5
Infinity® 15 Heat Pump with Puron® Refrigerant
1–1/2 to 5 Nominal Tons (Sizes 18–60)

Carrier
turn to the experts

Wiring Diagram

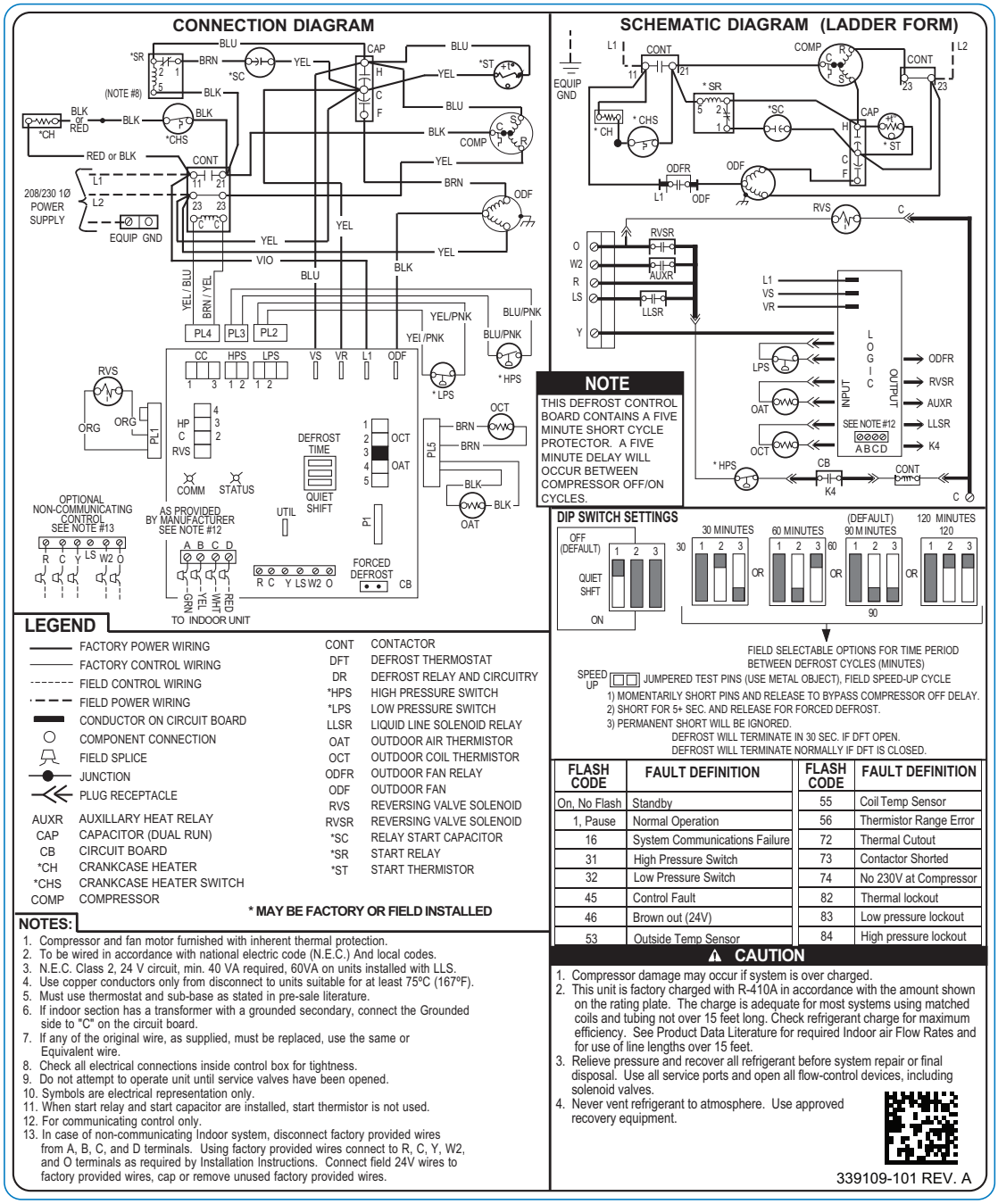

FLASH CODE	FAULT DEFINITION	FLASH CODE	FAULT DEFINITION
On, No Flash	Standby	55	Coil Temp Sensor
1, Pause	Normal Operation	56	Thermistor Range Error
16	System Communications Failure	72	Thermal Cutout
31	High Pressure Switch	73	Contactor Shorted
32	Low Pressure Switch	74	No 230V at Compressor
45	Control Fault	82	Thermal lockout
46	Brown out (24V)	83	Low pressure lockout
53	Outside Temp Sensor	84	High pressure lockout

Fig. 1 – Wiring Diagram — Model sizes 1.5 - 5 tons, 208/230-1

Copyright 2012 Carrier Corp. • 7310 W. Morris St. • Indianapolis, IN 46231

Edition Date: 09/12

Manufacturer reserves the right to change, at any time, specifications and designs without notice and without obligations.

Replaces: New