24VNA9
Infinity® 19VS Variable Speed Air Conditioner with Puron® Refrigerant

Carrier
turn to the experts™

Wiring Diagram

CONNECTION DIAGRAM

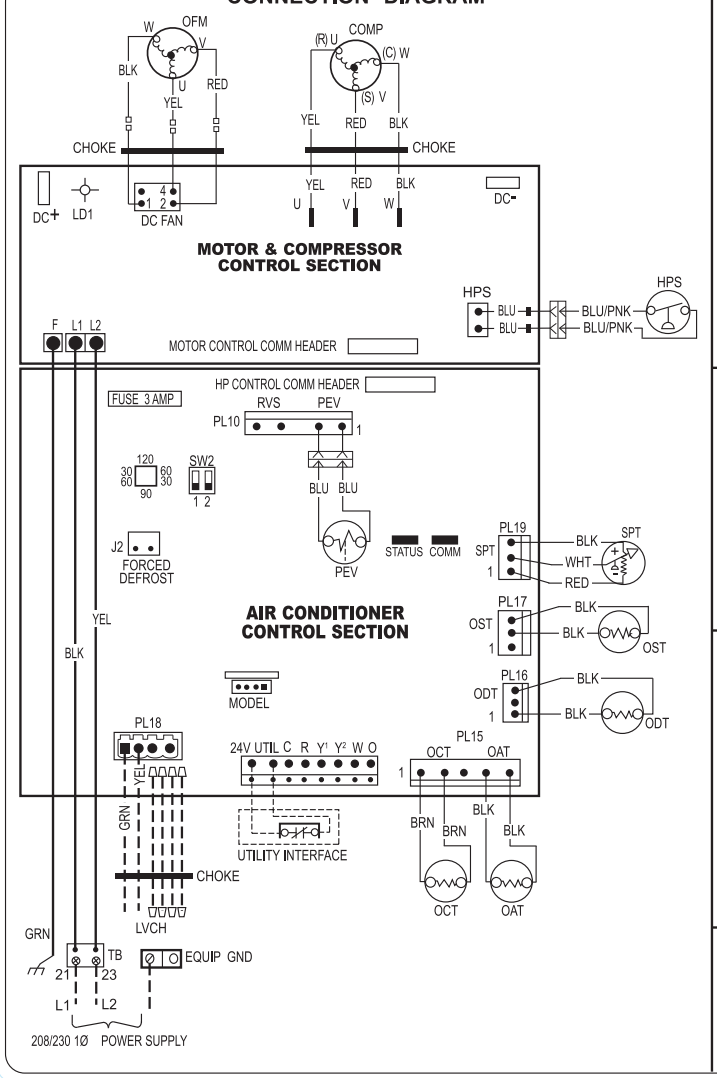

UNIT OPERATION

This control board contains a 3.5 minute short cycle protector. A 3.5 minute delay will occur between Compressor off/on cycles. To bypass delay, short forced defrost pins for 1 second then release. However, there is an additional 2.5 minutes delay upon expiration of the 3.5 minute short cycle delay to ensure the high and low side pressures are equalized. This is important for long term rotary compressor reliability. It is a delay that cannot and must not be bypassed. The internal crankcase heater is energized during off cycle as needed.

NOTES:

1. To Be Wired In Accordance With National Electric Code (N.E.C.) And Local Codes.
2. Use Copper Conductors Only. Use Conductors Suitable For At Least 75ºC (167ºF).
3. Two Wire A and B Required For Communication. If Outdoor Unit Improperly Grounded, Connect Indoor Ground To "C" Terminal.
4. If Any Of The Original Wire, As Supplied, Must Be Replaced, Use The Same Or Equivalent Wire.
5. Check All Electrical Connections Inside Control Box For Tightness.
6. Do Not Attempt To Operate Unit Until Service Valves Have Been Opened.
7. **If Communicating, Must Use With Infinity or Evolution User Interface Listed In Pre-sale Literature Only.**
8. For Non-Communicating Thermostats, 24VAC To Be Provided To R Connection.
9. N.E.C. class 2, 24 V circuit, min. 40 VA required, 60 VA on units installed with LLS.

-LEGEND-

———	FACTORY POWER WIRING	MODEL	MODEL PLUG
– –	FIELD POWER WIRING	OAT	OUTDOOR AIR THERMISTOR
———	FACTORY CONTROL WIRING	OCT	OUTDOOR COIL THERMISTOR
- - - -	FIELD CONTROL WIRING	ODT	OUTDOOR DISCHARGE THERMISTOR
○	COMPONENT CONNECTION	OFM	OUTDOOR FAN MOTOR
—●—	JUNCTION	OST	OUTDOOR SUCTION THERMISTOR
	FIELD SPLICE	PEV	PRESSURE EQUALIZER VALVE
—<←	PLUG CONNECTION	SPT	SUCTION PRESSURE TRANSDUCER
COMM	SYSTEM COMMUNICATION	STATUS	SYSTEM FUNCTION LIGHT
COMP	COMPRESSOR	SW2	DEFROST TIME SELECT
LD1	HIGH VOLTAGE INDICATOR LED	TB	TERMINAL BLOCK
HPS	HIGH PRESSURE SWITCH	UTIL	UTILITY CURTAILMENT
LVCH	LOW VOLTAGE CHOKE HARNESS	24V	24 VOLTS DC

*** MAY BE FACTORY OR FIELD INSTALLED**

MODEL PLUG CHART

MODEL SIZE	MODEL PLUG HK70EZ	PIN RESISTANCE (K Ω)	
		1 - 4 (R1)	2 - 3 (R2)
24	011	5.1K	150K
25	011	5.1K	150K
36	012	5.1K	180K
48	013	5.1K	220K

340613-101 REV. B

Fig. 1 – 24VNA9 208/230-1

Copyright 2014 Carrier Corp. • 7310 W. Morris St. • Indianapolis, IN 46231
Edition Date: 06/14

Manufacturer reserves the right to change, at any time, specifications and designs without notice and without obligations.

Replaces: New